CHAPTER 55
STABILIZERS
TABLE OF CONTENTS

| Subject | Subject No. |
|---|---|
| STABILIZERS - GENERAL | 55-00 |
| Stabilizers Diagrams | 55-00-1 |
| Figure 1 - Horizontal Stabilizer and Elevator Station Diagram (Metal Stabilizer) | |
| Figure 2 - Vertical Stabilizer and Rudder Station Diagram | |
| Figure 3 - Horizontal Stabilizer and Elevator Station Diagram (Graphite Composite Stabilizer) | |
| HORIZONTAL STABILIZER | 55-10 |
| Allowable Damage | 55-10-1 |
| Figure 1 - Horizontal Stabilizer Allowable Damage | |
| Figure 2 - Allowable Corrosion Damage to Horizontal Stabilizer Skin | |
| Figure 3 - Allowable Damage to Horizontal Stabilizer Rear Spar | |
| Figure 4 - Allowable Erosion Damage - Leading Edge of Horizontal Stabilizer | |
| Figure 5 - Allowable Damage to Horizontal Stabilizer Glass/Aramid/Graphite/Epoxy Composite Trailing Edge Panels (Metal Stabilizer) | |
| Figure 6 - Horizontal Stabilizer Center Section Spar Allowable Damage | |
| Figure 7 - Horizontal Stabilizer Center Section Attach Fitting Allowable Damage | |
| Figure 8 - Horizontal Stabilizer Center Section Beam Allowable Damage | |
| Structure Identification | 55-10-2 |
| Figure 1 - Horizontal Stabilizer Skin Identification (Metal Stabilizer) | |
| Figure 2 - Horizontal Stabilizer Structure Identification (Metal Stabilizer) | |
| Figure 3 - Graphite Composite Horizontal Stabilizer Skin Identification (Integral Skin/Stringer Panels) | |
| Figure 4 - Graphite Composite Horizontal Stabilizer Structure Identification | |
| Skin Repair | 55-10-3 |
| Figure 1 - Horizontal Stabilizer Leading Edge Skin External Repair | |
| Figure 2 - Horizontal Stabilizer Leading Edge Skin Flush Repair | |
| Figure 3 - Horizontal Stabilizer Skin External Repair | |
| Figure 4 - Horizontal Stabilizer Interspar Skin Flush Repair | |
| Figure 5 - Horizontal Stabilizer Interspar Skin and Doubler External Repair | |
| Figure 6 - Horizontal Stabilizer Interspar Skin and Doubler Flush Repair | |
| Figure 7 - Horizontal Stabilizer Interspar Skin Across Rib External Repair | |
| Figure 8 - Horizontal Stabilizer Interspar Skin Across Rib - Flush Repair | |
| Figure 9 - Horizontal Stabilizer Access Panel Installation | |
| Figure 10 - Repairs to Horizontal Stabilizer Glass/Aramid/Graphite/Epoxy Composite Trailing Edge Panels (Metal Stabilizer) | |

| Subject | Subject No. |
|---|---|
| Rib Repair | 55-10-4 |
| Figure 1 - Horizontal Stabilizer Interspar Rib Repair | |
| Figure 2 - Horizontal Stabilizer Interspar Rib Web Repair | |
| Spar Repair | 55-10-5 |
| Service Bulletin Repair Chart | |
| Figure 1 - Horizontal Stabilizer Front and Rear Spar Repair | |
| Figure 2 - Horizontal Stabilizer Front Spar Web Repair | |
| Figure 3 - Horizontal Stabilizer Rear Spar Web Repair | |
| Removal and installation Procedures | 55-10-6 |
| Figure 1 - Horizontal Stabilizer Center Section - Removal/Installation | |
| Trailing Edge Structure Repair | 55-10-7 |
| Figure 1 - Horizontal Stabilizer Trailing Edge Beam Cover Plate Repair | |
| Figure 2 - Horizontal Stabilizer Trailing Edge Beam Channel Repairs | |
| ELEVATOR | 55-20 |
| Allowable Damage | 55-20-1 |
| Figure 1 - Allowable Damage- Elevators | |
| Figure 2 - Elevator Skin Allowable Damage (Graphite Composite Elevator) | |
| Figure 3 - Elevator Tab Skin Allowable Damage (Graphite Composite Elevator) | |
| Figure 4 - Elevator Structure Allowable Damage (Graphite Composite Elevator) | |
| Figure 5 - Elevator Tab Structure Allowable Damage (Graphite Composite Elevator) | |
| Figure 6 - Elevator Fitting Allowable Damage (Graphite Composite Elevator) | |
| Figure 7 - Elevator Tab Fitting Allowable Damage (Graphite Composite Elevator) | |
| Structure Identification | 55-20-2 |
| Figure 1 - Elevator and Tab Structure Identification (Fiberglass/Metal Elevator) | |
| Figure 1A - Elevator Structure Identification (Graphite Composite Elevator) | |
| Figure 1B - Elevator Tab Structure Identification (Graphite Composite Elevator) | |
| Figure 2 - Elevator Skin Identification (Fiberglass/Metal Elevator) | |
| Figure 3 - Elevator Skin Identification (Graphite Composite Elevator) | |
| Figure 4 - Elevator Tab Skin Identification (Graphite Composite Elevator) | |
| Figure 5 - Elevator Tip Identification (Graphite Composite Elevator) | |
| Figure 6 - Elevator Fairing Identification (Graphite Composite Elevator) | |
| Figure 7 - Elevator Tab Fairing Identification (Graphite Composite Elevator) | |
| Figure 8 - Elevator Fitting Identification (Graphite Composite Elevator) | |
| Figure 9 - Elevator Tab Fitting Identification (Graphite Composite Elevator) | |
| Skin Repair | 55-20-3 |
| Figure 1 - Elevator Skin Repairs (Graphite Composite Elevator) | |
| Figure 2 - Elevator Tab Skin Repair (Graphite Composite Elevator) | |
| Rib Repair | 55-20-4 |
| Figure 1 - Elevator Rib Chord Repair (Fiberglass/Metal Elevator) | |

| Subject | Subject No. |
|---|---|
| Spar Repair | 55-20-5 |
| Service Bulletin Repair Chart | |
| Figure 1 - Elevator Front Spar Repair (Fiberglass/Metal Elevator) | |
| Structure Repair | 55-20-6 |
| Figure 1 - Elevator Structure Repairs (Graphite Composite Elevator) | |
| Figure 2 - Elevator Tab Structure Repairs (Graphite Composite Elevator) | |
| Figure 3 - Elevator Tip Repairs (Graphite Composite Elevator) | |
| Figure 4 - Removed | |
| Figure 5 - Removed | |
| VERTICAL STABILIZER | 55-30 |
| Allowable Damage | 55-30-1 |
| Figure 1 - Allowable Damage - Vertical Stabilizer | |
| Figure 2 - Vertical Stabilizer Skin Dent Limits | |
| Figure 3 - Allowable Corrosion Damage to Vertical Stabilizer Skin | |
| Figure 4 - Allowable Erosion Damage - Leading Edge of Vertical Stabilizer | |
| Figure 5 - Allowable Damage to Vertical Stabilizer Glass/Aramid/Graphite/ Epoxy Composite Trailing Edge Panels | |
| Structure Identification | 55-30-2 |
| Figure 1 - Vertical Stabilizer Skin Identification | |
| Figure 2 - Vertical Stabilizer Structure Identification | |
| Skin Repair | 55-30-3 |
| Figure 1 - Vertical Stabilizer Interspar Skin - External Repair | |
| Figure 2 - Vertical Stabilizer Interspar Skin - Flush Repair | |
| Figure 3 - Repairs to Vertical Stabilizer Glass/Aramid/Graphite/Epoxy Composite Trailing Edge Panels | |
| Figure 4 - Vertical Stabilizer Access Panel Installation | |
| Rib Repair | 55-30-4 |
| Figure 1 - Vertical Stabilizer Inspar Rib Chord Repair | |
| Figure 2 - Vertical Stabilizer Inspar Rib Web Repair | |
| Spar Repair | 55-30-5 |
| Figure 1 - Vertical Stabilizer Front Spar Web Repair | |
| Figure 2 - Vertical Stabilizer Rear Spar Web Repair | |
| Leading Edge Repair | 55-30-6 |
| Figure 1 - Vertical Stabilizer Leading Edge Skin - External Repair | |
| Figure 2 - Vertical Stabilizer Leading Edge Skin Flush Repair | |
| Fitting Repair | 55-30-7 |
| Figure 1 - Vertical Stabilizer Rudder Hinge Support Fitting Repair | |

| Subject | Subject No |
|---|---|
| RUDDER | 55-40 |
| Allowable Damage | 55-40-1 |
| Figure 1 - Allowable Damage - Rudder | |
| Figure 2 - Rudder Skin Allowable Damage (Graphite Composite Rudder) | |
| Figure 3 - Rudder Balance Arm Skin Allowable Damage (Graphite Composite Rudder) | |
| Figure 4 - Rudder Structure Allowable Damage (Graphite Composite Rudder) | |
| Figure 5 - Rudder Balance Arm Structure Allowable Damage (Graphite Composite Rudder) | |
| Figure 6 - Rudder Tip Allowable Damage (Graphite Composite Rudder) | |
| Figure 7 - Rudder Fitting Allowable Damage (Graphite Composite Rudder) | |
| Structure Identification | 55-40-2 |
| Figure 1 - Rudder Skin and Structure Identification (Glass Fabric/Metal Rudder) | |
| Figure 2 - Rudder Skin Identification (Graphite Composite Rudder) | |
| Figure 3 - Rudder Structure Identification (Graphite Composite Rudder) | |
| Figure 4 - Rudder Tip Identification (Graphite Composite Rudder) | |
| Figure 5 - Rudder Fitting Identification (Graphite Composite Rudder) | |
| Rib Repair | 55-40-3 |
| Figure 1 - Rudder Rib Chord Repair (Glass Fabric/Metal Rudder) | |
| Spar Repair | 55-40-4 |
| Figure 1 - Rudder Front Spar Repair (Glass Fabric/Metal Rudder) | |
| Skin Repair | 55-40-5 |
| Figure 1 - Rudder Skin Repairs (Graphite Composite Rudder) | |
| Structure Repair | 55-40-6 |
| Figure 1 - Rudder Structure Repairs (Graphite Composite Rudder) | |
| Figure 2 - Rudder Tip Repairs (Graphite Composite Rudder) | |
| ATTACH FITTINGS | 55-50 |

# STABILIZERS

## 1. General

A. This chapter provides structural identification, allowable damage and repairs to the horizontal stabilizer (metal stabilizer), elevators, vertical stabilizer and rudder. Structural identification is also provided for the graphite composite horizontal stabilizer; for inspection and repairs refer to documents D6-46035 and D6-46036.

B. The terms "fin" and "vertical stabilizer" are used interchangeably in this section to denote the same item. In particular, fin stations and fin water lines are used to provide vertical stabilizer stations as shown in 55-00-1.

C. The components covered by this chapter are basically similar for all models of the 737 and T-43A airplanes. Where detail differences between airplanes exist, they are denoted by notes.

## 2. Control Surface Balancing

A. Refer to 51-80-0 for general information on control surface balancing.

B. Refer to 51-80-4 for balance requirements and rebalancing instructions for the elevator.

C. Refer to 51-80-7 for balance requirements and rebalancing instructions for the rudder.

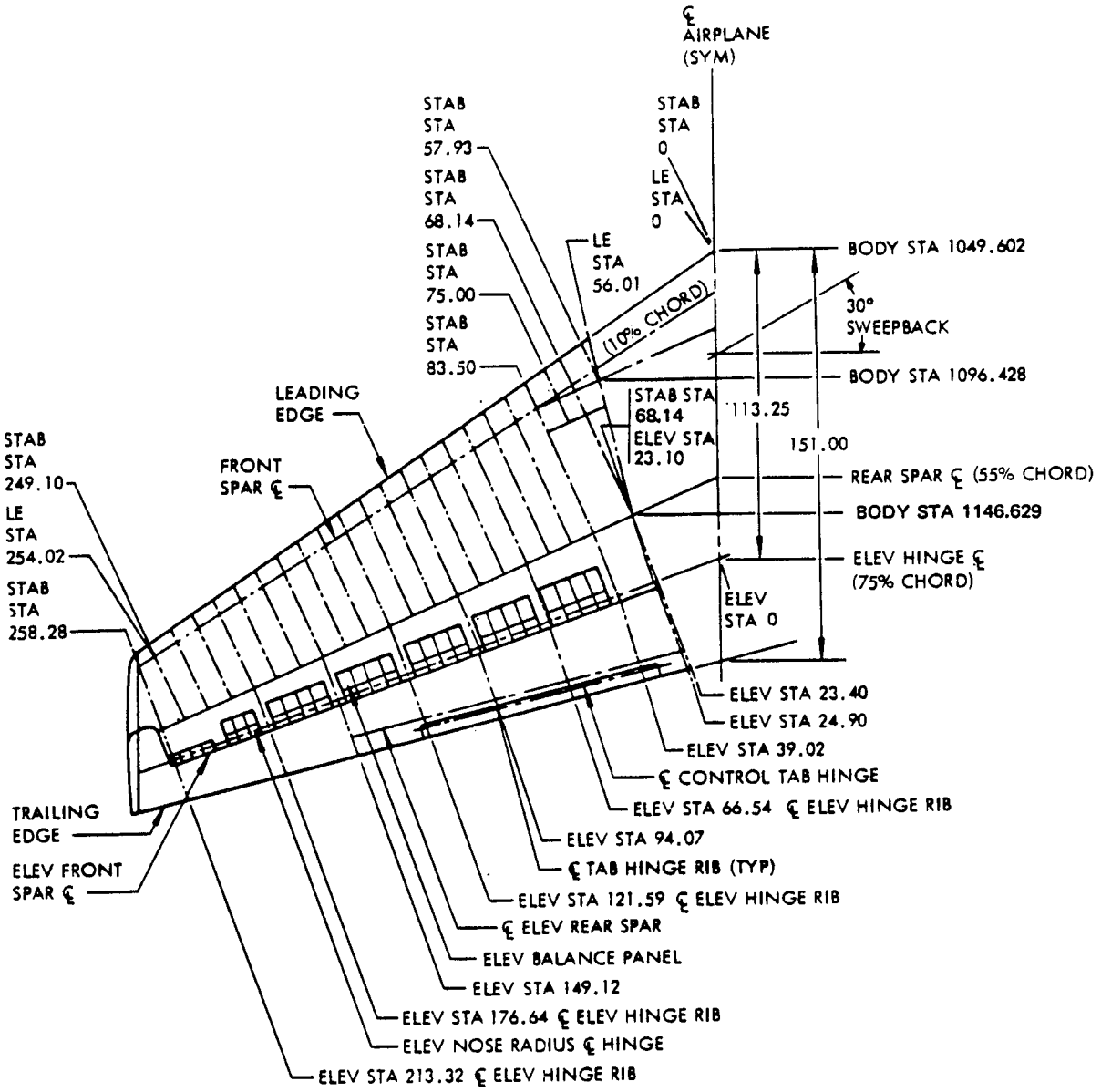


NOTES

- HORIZONTAL STABILIZER RIBS FROM STA 83.50 TO 249.10 HAVE 9.20 INCH CENTERS.
- STAB SEMI SPAN 216 INCHES

Horizontal Stabilizer and Elevator Station Diagram
(Metal Stabilizer)
Figure 1

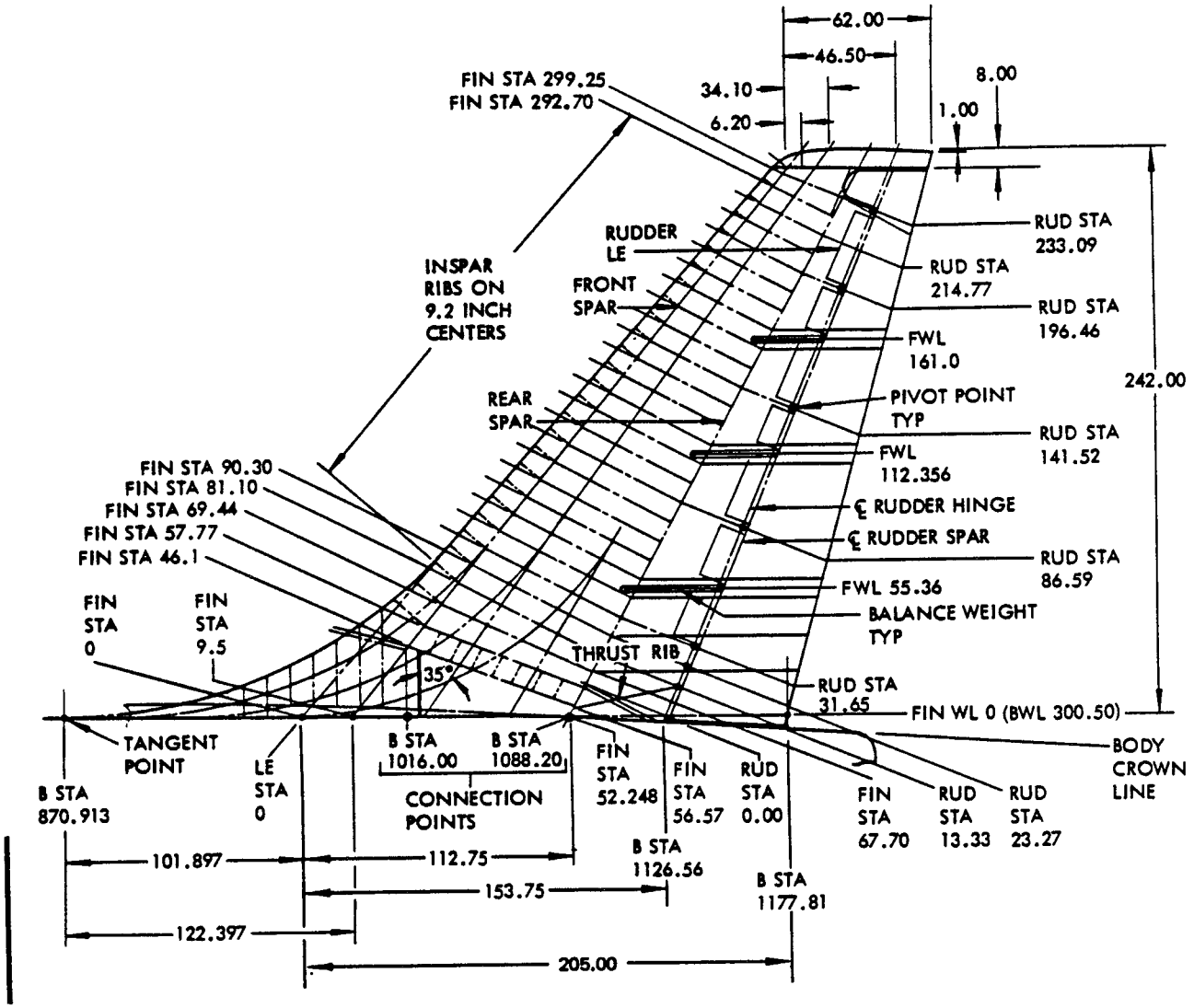


Vertical Stabilizer and Rudder Station Diagram
Figure 2

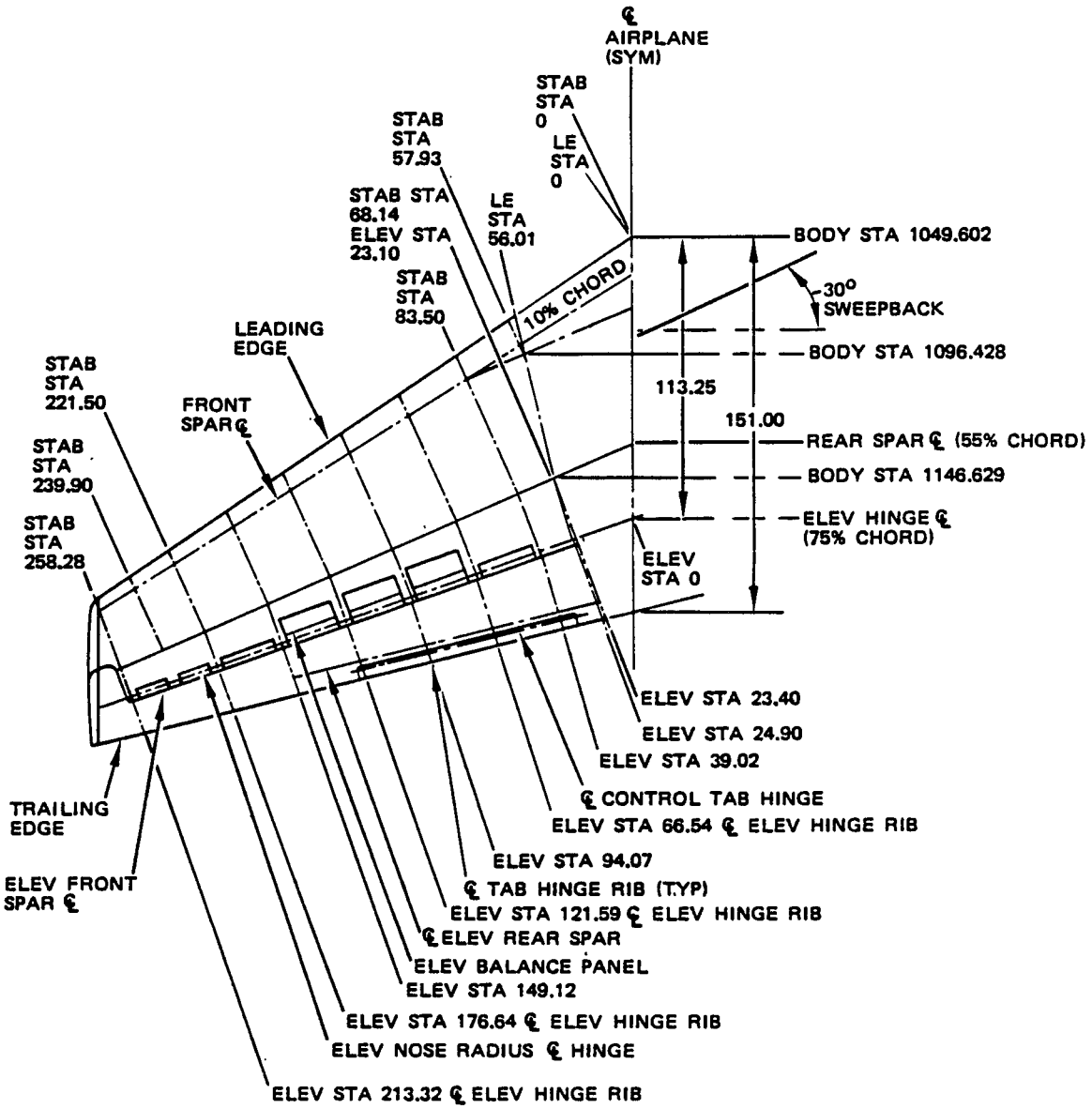


**NOTES**

- HORIZONTAL STABILIZER RIBS FROM STA 83.50 TO 221.50 HAVE 27.6 INCH CENTERS
- STAB SEMI SPAN 216 INCHES

Horizontal Stabilizer and Elevator Station Diagram
(Graphite Composite Stabilizer)
Figure 3

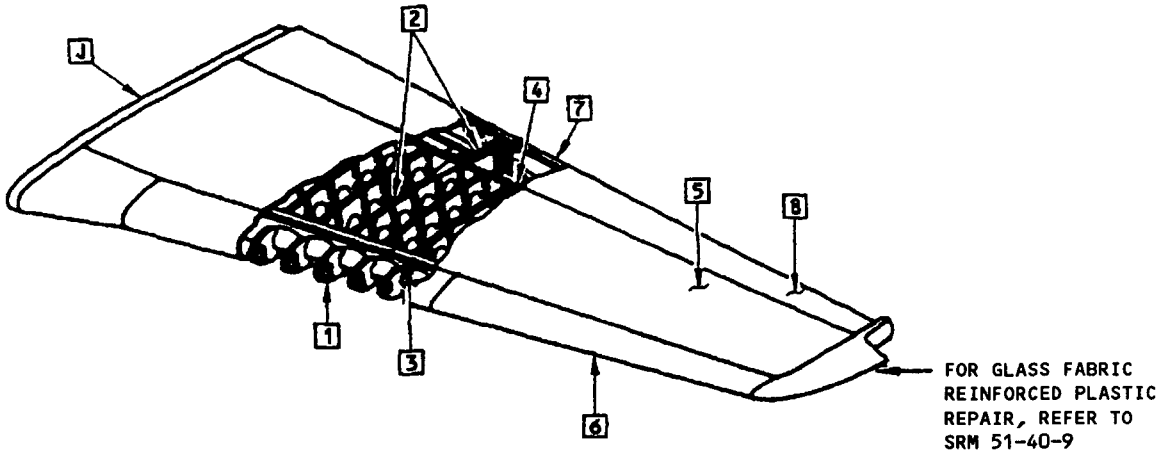


## NOTES

- DAMAGE, SUCH AS BLENDOUTS, TRIMOUTS OR DENTS:
  - THAT OCCUR TO A STRUCTURALLY SIGNIFICANT ITEM (SSI) GIVEN IN SRM 51-00-4, FIG. 3 AND,
  - THAT ARE WITHIN THE ALLOWABLE DAMAGE LIMITS OF THE BOEING SRM,

  DO NOT HAVE AN EFFECT ON THE DAMAGE TOLERANCE PROPERTIES OF THE SSI. THEREFORE, EXISTING SUPPLEMENTAL STRUCTURAL INSPECTION DOCUMENT (SSID) INSPECTION PROGRAMS REMAIN EFFECTIVE.
- D = THE LARGEST DAMAGE DIMENSION
- REFER TO SRM 51-10-1 FOR DAMAGE CLASSIFICATION.
- REFER TO SRM 51-10-2 FOR PROTECTIVE TREATMENT OF METAL REPAIR PARTS.
- REFER TO SRM 51-10-6 FOR CORROSION REMOVAL.
- REFER TO FIGURE 2 FOR ALLOWABLE CORROSION DAMAGE TO THE HORIZONTAL STABILIZER SKIN.
- REFER TO FIGURE 3 FOR ALLOWABLE CORROSION DAMAGE TO THE WEB AND THE CHORDS OF THE REPAIR AREA.
- REFER TO SRM 51-70 FOR AERODYNAMIC SMOOTHNESS.
- A REPAIR OR REPLACEMENT OF A STRUCTURAL MEMBER IS REQUIRED WHEN IT HAS BEEN SUBJECTED TO DAMAGE SUCH AS NICKS, SCRATCHES, GOUGES, DENTS AND HOLES THAT EXCEED THE ALLOWABLE DAMAGE.

[A] ON ANY REFERENCE LINE A-B DRAWN BETWEEN RIB OR SPAR CHORDS AS SHOWN IN DETAIL IV, THE MAXIMUM ALLOWABLE CROSS SECTIONAL AREA REMOVED FROM THE WEB INCLUDING ALL FASTENER HOLES, SCRATCHES AND GOUGES MUST NOT EXCEED 20% OF THE TOTAL CROSS SECTIONAL AREA BETWEEN A AND B.

ON ANY REFERENCE LINE M-N DRAWN THROUGH AN EXISTING LIGHTENING HOLE AS SHOWN IN DETAIL IV, THE MAXIMUM ALLOWABLE CROSS SECTIONAL AREA REMOVED FROM THE WEB INCLUDING ALL FASTENER HOLES, SCRATCHES AND GOUGES MUST NOT EXCEED 20% OF THE TOTAL CROSS SECTIONAL AREA BETWEEN M AND N.

[B] CLEAN UP CORROSION, GOUGES, NICKS AND SCRATCHES AS SHOWN IN DETAILS I, II, V, VI AND VII. THE MAXIMUM DEPTH (X) OF CORROSION, A GOUGE, A NICK OR A SCRATCH MUST NOT BE MORE THAN THESE LIMITS:

- 20% OF THE THICKNESS FOR THE SPAR WEB, THE LEADING EDGE RIBS AND THE TRAILING EDGE RIBS
- 25% OF THE THICKNESS OF THE SKINS
- 10% OF THE THICKNESS OR WIDTH OF THE FLANGE FOR THE SPAR CHORDS, THE RIB CHORDS AND THE TRAILING EDGE BEAM. [A] [G]

IGNORE ALL NICKS, GOUGES AND SCRATCHES THAT DO NOT GO THROUGH THE CLAD SURFACES. REFER TO SRM 51-10-1, PAR. 7.

Horizontal Stabilizer Allowable Damage
Figure 1 (Sheet 1)


BOEING PROPRIETARY - Copyright © - Unpublished Work - See title page for details.

NOTES (CONTINUED)

[C] DENTS ARE PERMITTED AS SHOWN IN DETAIL III. THE DAMAGE MUST NOT BE LESS THAN 4D (EDGE TO EDGE) FROM OTHER DAMAGE. REFER TO 51-70 FOR THE CRITICAL AERODYNAMIC AREAS.

[D] NO DENT DAMAGE IS ALLOWED ON RIB OR SPAR WEB STIFFENERS. REPLACE ALL STIFFENERS THAT SHOW DENT DAMAGE.

NO DENT DAMAGE IS ALLOWED ON RIB CHORD FLANGES. REPAIR OR REPLACE ALL RIB CHORDS THAT SHOW DENT DAMAGE.

NO DENT DAMAGE IS PERMITTED ON THE SPAR CHORD FLANGES OR THE TRAILING EDGE BEAM FLANGES. REPAIR OR REPLACE SPAR CHORDS AND TRAILING EDGE BEAMS THAT SHOW DENT DAMAGE.

[E] HOLE DAMAGE IN WEB STIFFENERS MUST NOT EXCEED THE LARGEST EXISTING RIVET OR BOLT FASTENER DIAMETER IN THE AREA OF THE DAMAGED PART OR TO EXCEED 20% OF THE FLANGE DIMENSION H. USE WHICHEVER VALUE IS SMALLER. FILL ALL HOLES WITH ALUMINUM RIVETS. SEE DETAIL IV.

[F] REPAIR ALL HOLES PER 51-40-6, FIG. 1, EXCEPT ORIGINAL REQUIRED DRAIN HOLES.

[G] ON ANY REF LINE A-B DRAWN BETWEEN THE REAR SPAR CHORDS, THE MAX ALLOWABLE CROSS SECTIONAL AREA REMOVED FROM THE WEB INCLUDING ALL FASTENER HOLES, SCRATCHES AND GOUGES MUST NOT EXCEED 10% OF THE TOTAL CROSS SECTIONAL AREA BETWEEN A AND B. THE 10% LIMIT IS APPLICABLE BETWEEN STAB STA 66.5 TO 120.3. NO HOLES ARE ALLOWED INBOARD OF STAB STA 66.5 FOR HOLES OUTSIDE THE ABOVE LIMITS. SEE [A].

[H] ALL HOLES IN THE REAR SPAR WEB WHICH OCCUR IN THE BALANCE PANEL CAVITY MUST BE SEALED AGAINST AIR PRESSURE.

[I] ALL CRACKED PARTS MUST BE REPAIRED. REFER TO SRM 51-10.

CRACKS AT FLANGE EDGES MUST BE REWORKED AS SHOWN IN DETAILS I, II AND V.

THE TOTAL AREA THAT IS REMOVED MUST NOT DECREASE THE TOTAL CROSS SECTIONAL AREA MORE THAN 20%. THE AREA THAT IS REMOVED INCLUDES FASTENER HOLES, GOUGES, NICKS AND SCRATCHES.

[J] NO HOLES ARE ALLOWED OTHER THAN THE ORIGINAL HOLES REQUIRED BY THE MANUFACTURER.

[K] FOR ALLOWABLE DAMAGE ON GLASS FABRIC REINFORCED PANELS OR GLASS FABRIC REINFORCED HONEYCOMB PANELS SEE 51-40-6.

[L] REFER TO FIGURE 3.

[M] ON A REFERENCE LINE DRAWN BETWEEN FRONT AND REAR SPARS, PERPENDICULAR TO THE REAR SPAR, THE CROSS SECTIONAL AREA REMOVED INCLUDING ALL EXISTING HOLES SHALL NOT EXCEED 15% OF THE TOTAL CROSS SECTIONAL AREA OF THE SHEET, NOR SHALL THE CROSS SECTIONAL AREA OUT IN ANY LOCAL REGION EXCEED 15% OF THE LOCAL, CROSS SECTIONAL AREA. ANY HOLE WITHIN 30 DEGREES OF THE CLOSEST HOLE ON THE REFERENCE LINE SHALL BE INCLUDED IN THE TOTAL CROSS SECTIONAL AREA OUT. INCLUDE SCRATCHES AND GOUGES IN THE AREA OUT.

[N] MAXIMUM DIAMETER OF ANY HOLE SHALL BE 4 TIMES THE SKIN THICKNESS OR 0.25 WHICHEVER IS GREATER PROVIDED DAMAGE IS AT LEAST 1.00 INCH FROM ANY OTHER HOLE, PART EDGE, OR OTHER DAMAGE.

$$\frac{d1 + d2 + d3 - - + d15}{b1} = .15 \text{ MAX}$$

$$\frac{\frac{d7}{2} + d8 + d9 + \frac{d10}{2}}{b2} = .15 \text{ MAX}$$

Horizontal Stabilizer Allowable Damage
Figure 1 (Sheet 2)

NOTES (CONTINUED)

[O] HOLES UP TO 0.25 DIAMETER ARE ALLOWED PROVIDED THEY ARE LOCATED 4D FROM ANY OTHER HOLE, FASTENER, PART EDGE, OR OTHER DAMAGE AND ARE FILLED WITH 2117-T3 OR T4 ALUMINUM RIVETS. ALUMINUM RIVETS TO BE INSTALLED WET WITH BMS 5-95 SEALANT. ONE HOLE ALLOWED PER WEB BAY. AS AN OPTION, A 2117-T3 OR 2117-T4 ALUMINUM PROTRUDING HEAD RIVET OR NAS1399D BLIND RIVET MAY BE INSTALLED. BLIND RIVETS MUST BE INSPECTED EVERY "2A" CHECK AND REPLACED WITH SOLID RIVETS NO LATER THAN THE NEXT "C" CHECK. ALL OTHER HOLES TO BE REPAIRED.

[P] RIB WEBS AT THESE STATIONS CAN HAVE DAMAGE FROM WEAR CAUSED BY CONTACT WITH THE ELEVATOR BALANCE PANEL BULB SEALS:

- ELEV STA 66.54
- ELEV STA 94.07
- ELEV STA 121.59
- ELEV STA 149.12

TO REPAIR THE DAMAGE:

a) BLEND OUT THE DAMAGE [B]

b) APPLY A CHEMICAL CONVERSION COATING TO THE WEB

c) APPLY ONE COAT OF BMS 10-11, TYPE I PRIMER TO THE WEB

d) APPLY ONE COAT OF BMS 10-86, TYPE II ABRASION RESISTANT TEFLON FINISH. REFER TO 51-21-81 OF THE MAINTENANCE MANUAL.

[Q] DENTS ARE PERMITTED IN THE LEADING EDGE SKINS AS SHOWN IN DETAIL III. THE DAMAGE MUST NOT BE LESS THAN 4D (EDGE TO EDGE) FROM OTHER DAMAGE. THE EDGE OF THE DAMAGE MUST BE MORE THAN 1.0 INCH FROM AN ADJACENT HOLE, MATERIAL EDGE, OR OTHER DAMAGE.

IF THE DENT:
-HAS A DEPTH (Y) LARGER THAN 0.05 INCH, BUT NOT LARGER THAN 0.125 INCH, AND
-DOES NOT HAVE CRACKS, NICKS, GOUGES, OR DELAMINATIONS,
DO AS FOLLOWS:

FILL THE DENT WITH POTTING COMPOUND AS GIVEN IN SRM 51-40-1. SEAL THE AREA WITH ALUMINUM FOIL TAPE (SPEED TAPE) 3M-Y436 OR ITS EQUIVALENT. KEEP A RECORD OF THE LOCATION WHERE THE SPEED TAPE IS INSTALLED. MAKE AN INSPECTION OF THAT LOCATION EACH 'A' CHECK AFTER THE TAPE IS APPLIED. REPLACE THE TAPE IF DETERIORATION IS FOUND. REPAIR THE DAMAGE NO LATER THAN THE NEXT 'C' CHECK.

IF THE DEPTH OF THE DENT (Y) IS LARGER THAN 0.125, BUT NOT LARGER THAN 0.25 INCH, DO ONE OF THESE PROCEDURES:

- FILL THE DENT WITH POTTING COMPOUND AS GIVEN IN SRM 51-40-1. MAKE SURE THE DENT HAS NO CRACKS, NICKS, SCRATCHES, GOUGES, OR DELAMINATION. SEAL THE AREA WITH ALUMINUM FOIL TAPE (SPEED TAPE) 3M-Y436 OR ITS EQUIVALENT. KEEP A RECORD OF THE LOCATION WHERE THE SPEED TAPE IS INSTALLED. MAKE AN INSPECTION OF THAT LOCATION EACH DAY AFTER THE TAPE IS APPLIED. REPLACE THE TAPE IF DETERIORATION IS FOUND. REPAIR THE DAMAGE NO LATER THAN 60 FLIGHT HOURS.
- REWORK THE DENT AS GIVEN IN SRM 51-40-1.
- CUT OUT THE DENT AND REPAIR IT AS GIVEN IN SRM 55-10-3.

IF THE DEPTH OF THE DENT (Y) IS GREATER THAN 0.25 INCH, CUT OUT THE DENT AND REPAIR IT AS GIVEN IN SRM 55-10-3.

Horizontal Stabilizer Allowable Damage
Figure 1 (Sheet 3)

NOTES (CONTINUED)

[R] EDGE CRACKS MUST BE REMOVED AS SHOWN IN DETAILS I, II, AND V. OTHER CRACKS ARE PERMITTED UP TO 0.50 INCH IN LENGTH. THE DAMAGE MUST BE A MINIMUM OF 6.0 INCHES FROM A HOLE OR OTHER DAMAGE. THE DAMAGE MUST BE A MINIMUM OF 3.0 INCHES FROM THE EDGE OF THE MATERIAL. [T]

[S] IF THE FIBERS ARE DAMAGED, USE THE LIMITS APPLICABLE TO CRACKS. IF THE FIBERS ARE NOT DAMAGED, PROTECT THE DAMAGE AS SPECIFIED IN [T].

[T] IT IS RECOMMENDED TO REMOVE MOISTURE FROM THE DAMAGED AREA. USE VACUUM AND HEAT (A MAXIMUM OF 150°F (66°C)) TO REMOVE THAT MOISTURE. SEAL THE DAMAGED AREA WITH ALUMINUM FOIL TAPE (SPEED TAPE) 3M-Y436 OR AN EQUIVALENT. KEEP A RECORD OF THE LOCATION WHERE THE SPEED TAPE IS INSTALLED. REMOVE THE SPEED TAPE TO MAKE AN INSPECTION OF THE LOCATION EACH 'A' CHECK AFTER THE TAPE IS APPLIED. REPLACE THE TAPE IF IT STARTS TO COME OFF OR DETERIORATION IS FOUND. THE DAMAGE MUST BE REPAIRED NO LATER THAN THE SUBSEQUENT 'C' CHECK.

Horizontal Stabilizer Allowable Damage
Figure 1 (Sheet 4)

| ITEM | LOCATION OF DAMAGE | | TYPE OF DAMAGE | | | |
|---|---|---|---|---|---|---|
| | | | CRACKS | NICKS, GOUGES, SCRATCHES AND CORROSION | DENTS | HOLE |
| 1 | LEADING EDGE RIB | WEBS | I | A B | C | A |
| | | CHORDS | | B | D | NOT PERMITTED |
| 2 | TRAILING EDGE AND INTERSPAR RIB | WEBS | | A B P | C | A |
| | | CHORDS | | B | D | NOT PERMITTED |
| | | WEB STIFFENERS | | B | D | E |
| 3 | FRONT SPAR | WEBS | | A B | C | J |
| | | CHORDS | | B | D | NOT PERMITTED |
| | | WEB STIFFENERS | | B | D | E |
| 4 | REAR SPAR | WEBS | | L | C | G H |
| | | CHORDS | | L | D | NOT PERMITTED |
| | | WEB STIFFENERS | | B | D | E |
| 5 | SKIN | | | B | C | M |
| 6 | LEADING EDGE-SKIN | | | B | Q | NOT PERMITTED |
| 7 | TRAILING EDGE BEAM (METAL) | | I | B | D | NOT PERMITTED |
| | TRAILING EDGE BEAM (GLASS/EPOXY LAMINATE) | | R | S | D | NOT PERMITTED |
| 8 | TRAILING EDGE SKIN | | I | K | NOT PERMITTED | F |

Horizontal Stabilizer Allowable Damage
Figure 1 (Sheet 5)

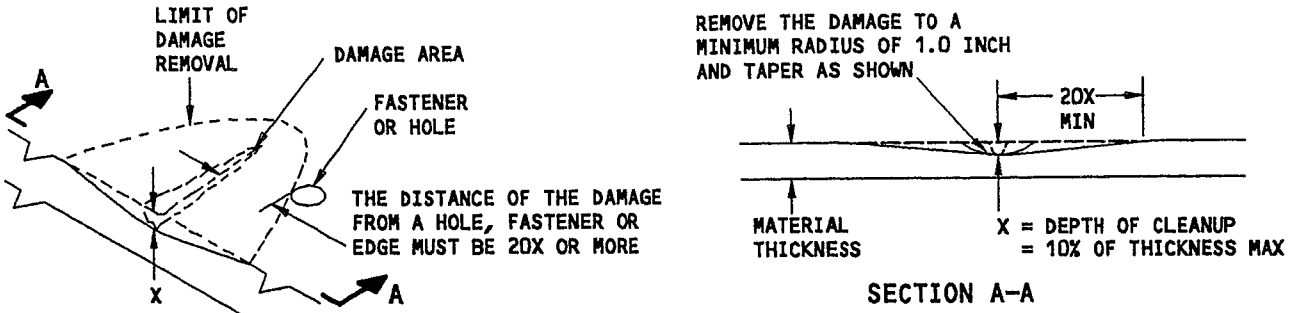


REMOVAL OF DAMAGE ON A SURFACE
DETAIL I

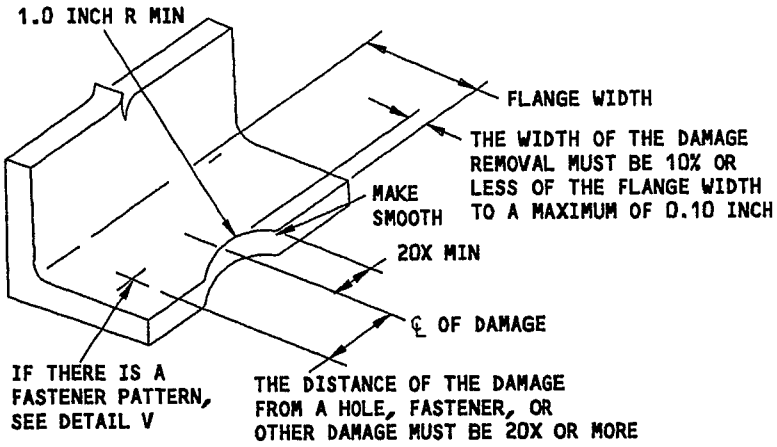


REMOVAL OF DAMAGE ON AN EDGE
DETAIL II

$\frac{A}{Y}$ MUST NOT BE LESS THAN 30

Y = 0.125 INCH MAX FOR NONCRITICAL AREAS

Y = 0.050 INCH MAX FOR CRITICAL AREAS

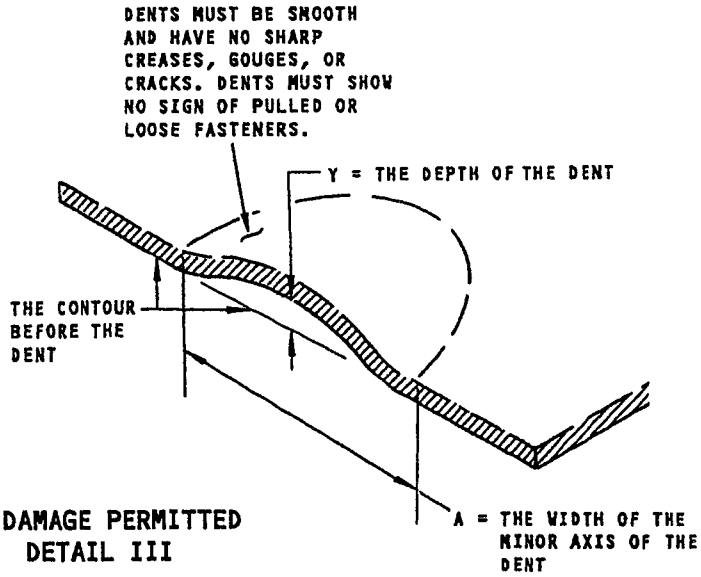


DENT DAMAGE PERMITTED
DETAIL III

Allowable Damage Horizontal Stabilizer
Figure 1 (Sheet 6)

C12933

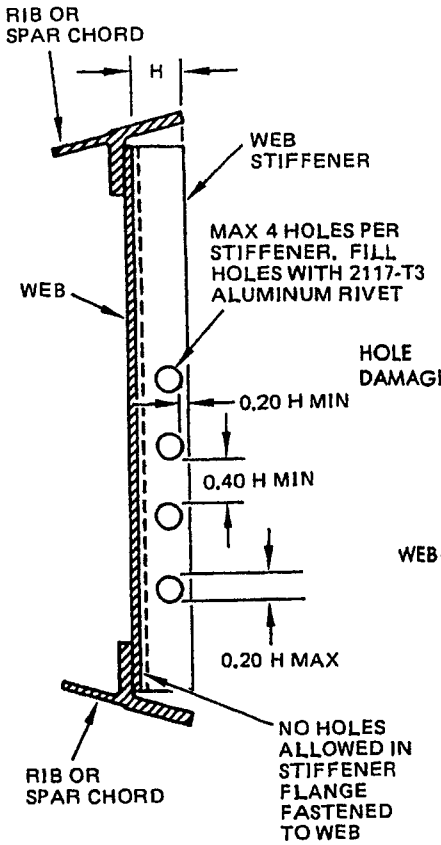


H = WIDTH OF STIFFENER FLANGE

TYPICAL FOR ALL WEB STIFFENERS

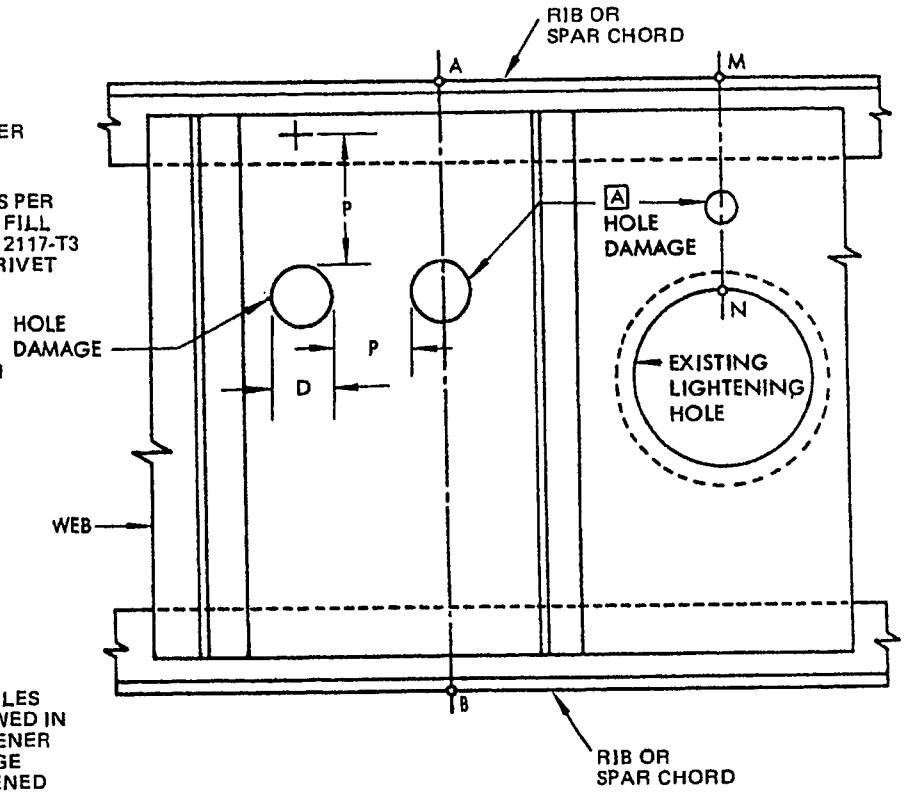


A, B, M, N = REFERENCE POINTS
D = ANY HOLE SIZE UP TO AND INCLUDING 1.00 DIA MAX
H = WIDTH OF STIFFENER FLANGE
P = 2 X D MIN

ALLOWABLE DAMAGE LIMITS FOR HOLES
DETAIL IV

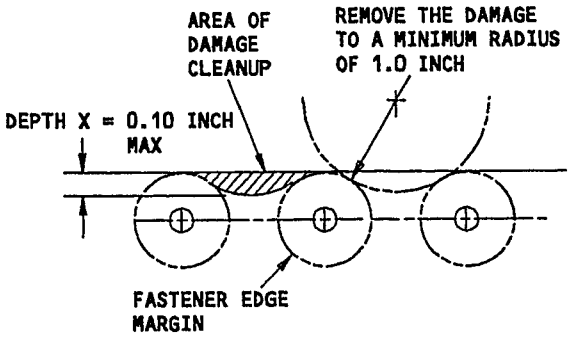


REMOVAL OF DAMAGE AT EDGES WHERE FASTENER EDGE MARGINS DO NOT OVERLAP

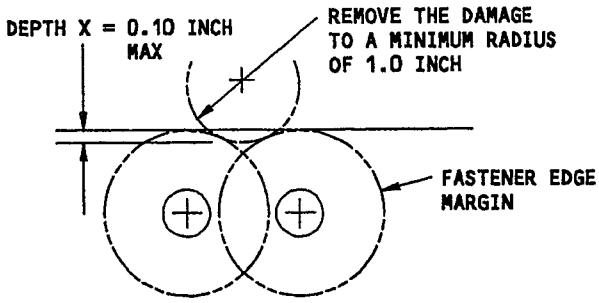


REMOVAL OF DAMAGE AT EDGES WHERE FASTENER EDGE MARGINS OVERLAP

DETAIL V

Allowable Damage Horizontal Stabilizer
Figure 1 (Sheet 7)

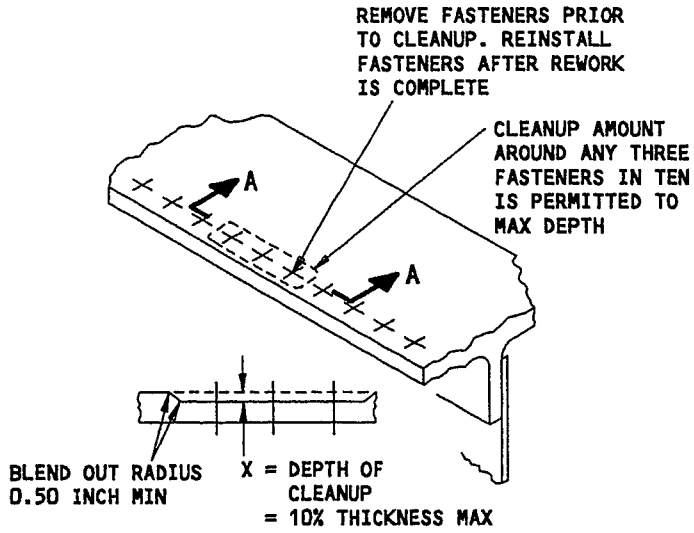


SECTION A-A

REMOVAL OF CORROSION DAMAGE
DETAIL VI

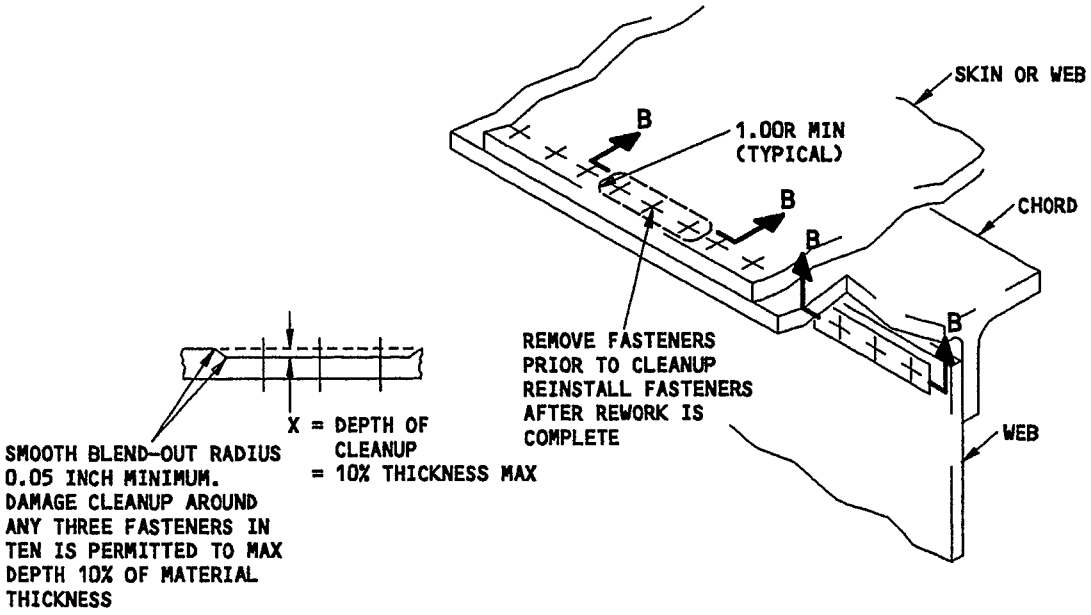


SECTION B-B

REMOVAL OF CORROSION DAMAGE
DETAIL VII

Horizontal Stabilizer Allowable Damage
Figure 1 (Sheet 8)

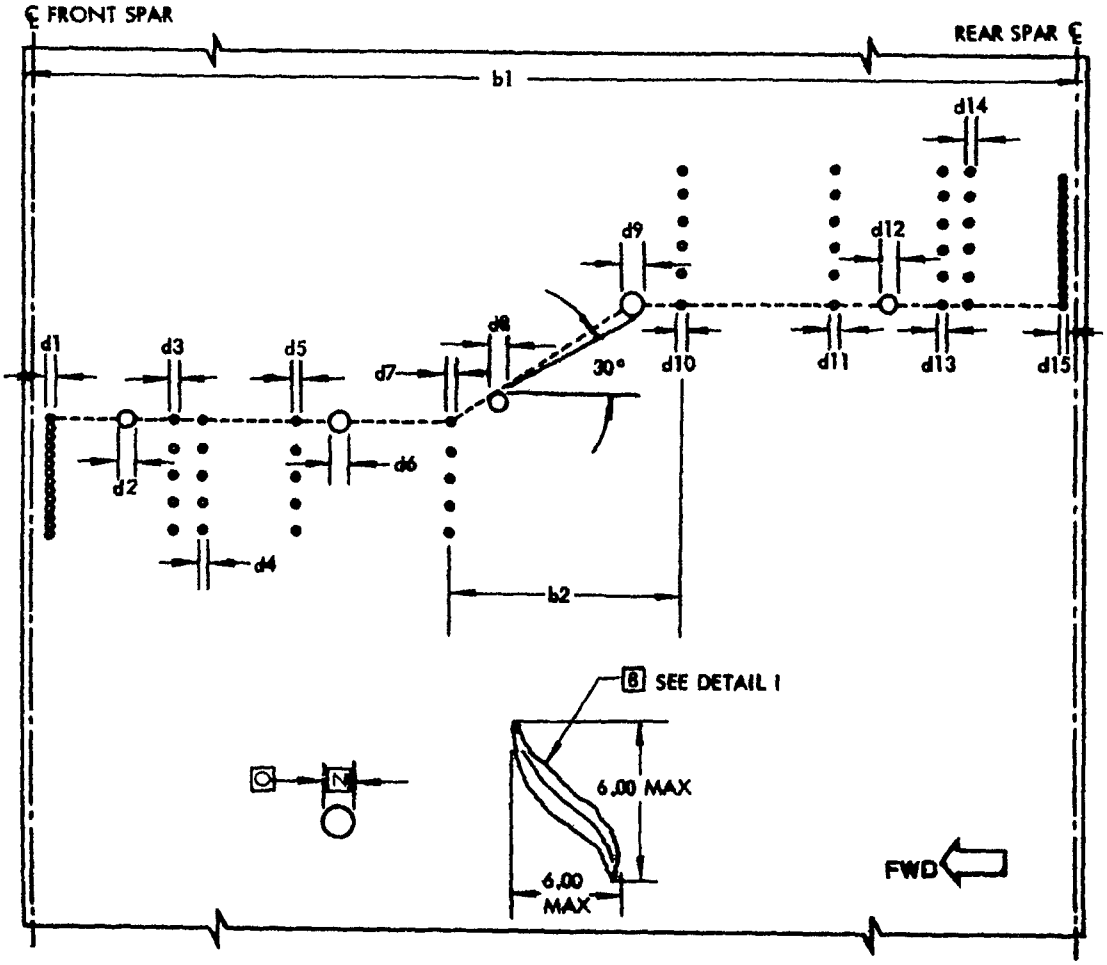


ALLOWABLE SKIN DAMAGE
DETAIL VIII

Allowable Damage Horizontal Stabilizer
Figure 1 (Sheet 9)

## NOTES

- DAMAGE, SUCH AS BLENDOUTS, TRIMOUTS OR DENTS:
  - THAT OCCUR TO A STRUCTURALLY SIGNIFICANT ITEM (SSI) GIVEN IN SRM 51-00-4, FIG. 3 AND,
  - THAT ARE WITHIN THE ALLOWABLE DAMAGE LIMITS OF THE BOEING SRM,

  DO NOT HAVE AN EFFECT ON THE DAMAGE TOLERANCE PROPERTIES OF THE SSI. THEREFORE, EXISTING SUPPLEMENTAL STRUCTURAL INSPECTION DOCUMENT (SSID) INSPECTION PROGRAMS REMAIN EFFECTIVE.
- ALL CORROSION MUST BE CLEANED UP AS SHOWN IN DETAIL I. THE DEPTH AFTER CLEANUP MUST NOT BE MORE THAN 10% OF THE THICKNESS OF SKIN PLUS BONDED DOUBLER (IF ANY) UP TO A MAXIMUM OF 0.025 INCH. REPORT THE LOCATION AND AMOUNT OF CORROSION THAT IS MORE THAN THE ABOVE LIMITS TO THE BOEING COMPANY.
- WHERE CORROSION CLEANUP GOES OVER COUNTERSUNK RIVET HEADS, NOT MORE THAN 0.006 INCH MAY BE REMOVED FROM THE HEAD THICKNESS.
- WHERE COUNTERSUNK FASTENERS ARE REMOVED AND REPLACED WITH FASTENERS OF A LARGER SIZE, THE COUNTERSINK DEPTH MUST NOT BE MORE THAN 80% OF THE THICKNESS OF SKIN AND BONDED DOUBLER.

  IF THIS RESULTS IN HEAD PROTRUSION, SHAVE THE HEAD (0.006 INCH MAXIMUM) OR INSTALL UNIVERSAL HEAD RIVETS AS FOLLOWS:

| EXISTING RIVET | REPLACEMENT RIVET |
|---|---|
| BACR15CE5D | BACR15ET7AD |
| BACR15CE6D | BACR15BB8AD |

- SKIN RIVETS REMOVED FOR CORROSION CLEANUP CAN BE REPLACED WITH NAS1398D OR NAS1399D BLIND RIVETS OF THE APPROPRIATE SIZE.
- FOR REWORK DUE TO CORROSION ON THE T-43A AIRPLANES, REF. T.O. IT-43A-23.

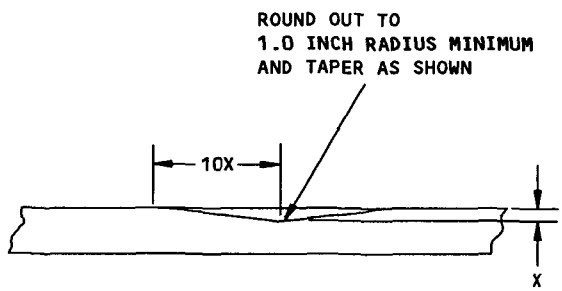


X= DEPTH OF CORROSION AFTER CLEANUP

SECTION THROUGH SKIN
DETAIL I

Allowable Corrosion Damage to Horizontal Stabilizer Skin
Figure 2


BOEING PROPRIETARY - Copyright © - Unpublished Work - See title page for details.

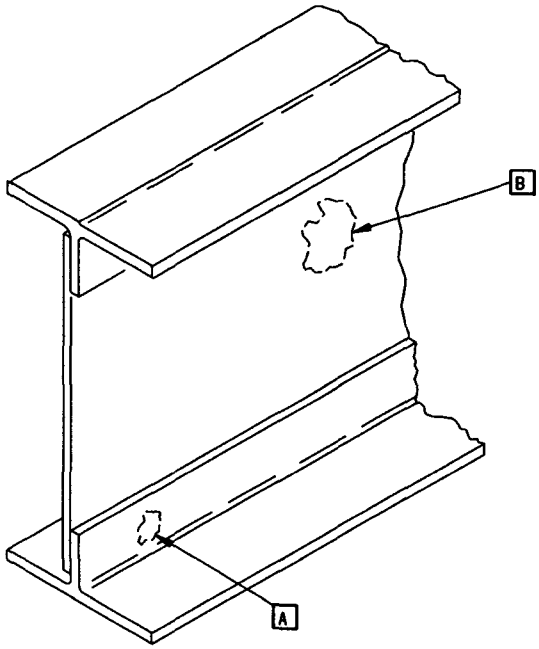


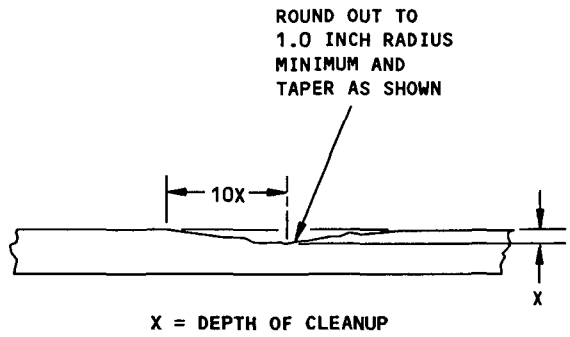


DETAIL I

## NOTES

- DAMAGE, SUCH AS BLENDOUTS, TRIMOUTS OR DENTS:
  - THAT OCCUR TO A STRUCTURALLY SIGNIFICANT ITEM (SSI) GIVEN IN SRM 51-00-4, FIG. 3 AND,
  - THAT ARE WITHIN THE ALLOWABLE DAMAGE LIMITS OF THE BOEING SRM,

  DO NOT HAVE AN EFFECT ON THE DAMAGE TOLERANCE PROPERTIES OF THE SSI. THEREFORE, EXISTING SUPPLEMENTAL STRUCTURAL INSPECTION DOCUMENT (SSID) INSPECTION PROGRAMS REMAIN EFFECTIVE.
- THIS FIGURE IS APPLICABLE TO NICK, GOUGE, SCRATCH AND CORROSION DAMAGE TO THE HORIZONTAL STABILIZER CHORDS AND WEB.
- FOR REWORK OF NICKS, GOUGES, SCRATCHES AND CORROSION ON THE T-43A AIRPLANES, SEE T.O. IT-43A-23.
- WHERE IT IS NECESSARY TO REMOVE FASTENERS FOR DAMAGE CLEANUP, ADDITIONAL ACCESS HOLES CAN BE NECESSARY IN THE BOTTOM SKIN. REFER TO SRM 55-10-3, FIG. 9 FOR DETAILS OF ACCESS HOLES.

[A] THE ALLOWABLE DEPTH OF DAMAGE TO CHORDS AFTER CLEANUP IS 0.050 INCH INBOARD OF STABILIZER STA 111.10 AND 25% OF MATERIAL THICKNESS (0.050 INCH MAXIMUM) OUTBOARD OF STABILIZER STA 111.10.

WHERE FASTENER REMOVAL IS NECESSARY FOR DAMAGE CLEANUP, 1/64 INCH OVERSIZE LOCKBOLTS (BACB30CU) OR HI-LOKS (BACB30FP) CAN BE USED AS REPLACEMENT.

[B] THE PERMITTED DEPTH OF DAMAGE TO THE WEB AFTER CLEANUP IS 25% OF THE TOTAL WEB THICKNESS AS FOLLOWS:

| STABILIZER STATION | MAXIMUM PERMITTED CLEANUP |
|---|---|
| 258.28 TO 221.50 | 0.006 INCH |
| 221.50 TO 193.90 | 0.009 INCH |
| 193.90 TO 130.70 | 0.010 INCH |
| 130.70 TO 93.94 | 0.010 TO 0.025 INCH CONSTANT TAPER |
| 93.94 TO 68.14 | 0.025 INCH |

Allowable Damage to Horizontal Stabilizer Rear Spar
Figure 3


BOEING PROPRIETARY - Copyright © - Unpublished Work - See title page for details.

| APPLICABILITY |
| --- |
| THE ALLOWABLE DAMAGE LIMITS GIVEN IN THIS FIGURE WILL NOT HAVE AN EFFECT ON A STRUCTURALLY SIGNIFICANT ITEM (SSI) GIVEN IN SRM 51-00-4, FIG. 3. THUS, NO CHANGE TO THE SUPPLEMENTAL STRUCTURAL INSPECTION DOCUMENT (SSID) INSPECTION PROGRAM IS NECESSARY. |

## DAMAGE CLEANUP

A. For slight erosion of leading edges of horizontal stabilizer, the operator may choose to repair the affected areas as follows:

WARNING: CLEANING AND COATING MATERIALS ARE TOXIC AND FLAMMABLE. USE ADEQUATE VENTILATION AND PROPER FIRE PRECAUTIONS.

1. Mask the unaffected areas.
2. Clean the surface with cheesecloth moistened with water.
3. Polish or sand the affected area to a smooth surface and to a depth not more than 25% of the initial skin thickness.

   NOTE: Use aluminum oxide abrasives or aluminum wool. Do not use silicon carbide abrasives or steel wool.
4. Blend the depressions into the surrounding area using powdered household cleanser or 400 grit aluminum oxide paper. Refer to Section A-A for blending requirements.
5. Wipe area clean using clean cheesecloth moistened with MEK or MIBK.
6. Determine the depth of material removed by the use of a Vidigage, Branson digital caliper, dial gage or straight edge and feeler gages, whichever method is most suitable. If the amount of material removed is more than 25% of the initial skin thickness, contact The Boeing Company for instructions. If the amount of material removed is not more than 25% of the initial skin thickness, apply Alodine 1000 to the repaired surfaces as given in SRM 51-10-2. Allow to cure for at least 8 hours at 70-75°F and a relative humidity of 40-50% and return the airplane to service.

   NOTE: See Fig. 1 for allowable damage limits for other types of damage.

B. For additional protection against erosion of leading edges of horizontal stabilizer, especially where erosion is moderate to severe, the leading edges may be refinished with Astrocoat which can be replaced when it becomes eroded. Cleanup of eroded areas using an abrasive blast, which provides for minimum removal of metal, is recommended.

1. Mask unaffected areas and close off and seal openings to prevent entry of foreign matter.
2. Static ground both the airplane and the abrasive blast equipment.

Allowable Erosion Damage - Leading Edge of Horizontal Stabilizer
Figure 4 (Sheet 1)


BOEING PROPRIETARY - Copyright © - Unpublished Work - See title page for details.

3. Spray clean the eroded area with water, MEK, or toluene. If an eroded protective coating is to be replaced, soak the coating beneath cheesecloth saturated with MEK or MIBK until coating is sufficiently soft and remove with a plastic scraper.

4. Abrasive blast the eroded area per 51-10-6 ensuring that all of the oxide and/or corrosion have been removed from the eroded area.

   CAUTION: DO NOT USE CHEESECLOTH OR ANY OTHER FABRIC TO CLEAN THE BLASTED AREA. LINT DEPOSITED ON BLASTED AREA WHEN COVERED WITH ASTROCOAT SHORTENS THE LIFE OF ASTROCOAT.

5. Determine the depth of material removed. If the amount of material removed exceeds 25% of the original skin thickness, contact the Boeing Company for instructions. If the amount of material removed does not exceed 25% of the original skin thickness, apply Alodine 1200 with nylon brush. Do not use cheesecloth or any other fabric.

6. Spray clean with MEK Or water.

   NOTE: If the metal had been sanded and it remains smooth, the area may be wiped clean with MEK and cheesecloth.

7. Apply Astrocoat per 51-20-5, ensuring that the full thickness of Astrocoat completely covers the area subjected to erosion.

8. Restore original finish after the Astrocoat has dried 1 hour at 70-75°F and a relative humidity of 40-50%.

9. After the final application, cure as shown in Fig. 1 of 51-20-5 before returning airplane to service.

Allowable Erosion Damage - Leading Edge of Horizontal Stabilizer
Figure 4 (Sheet 2)

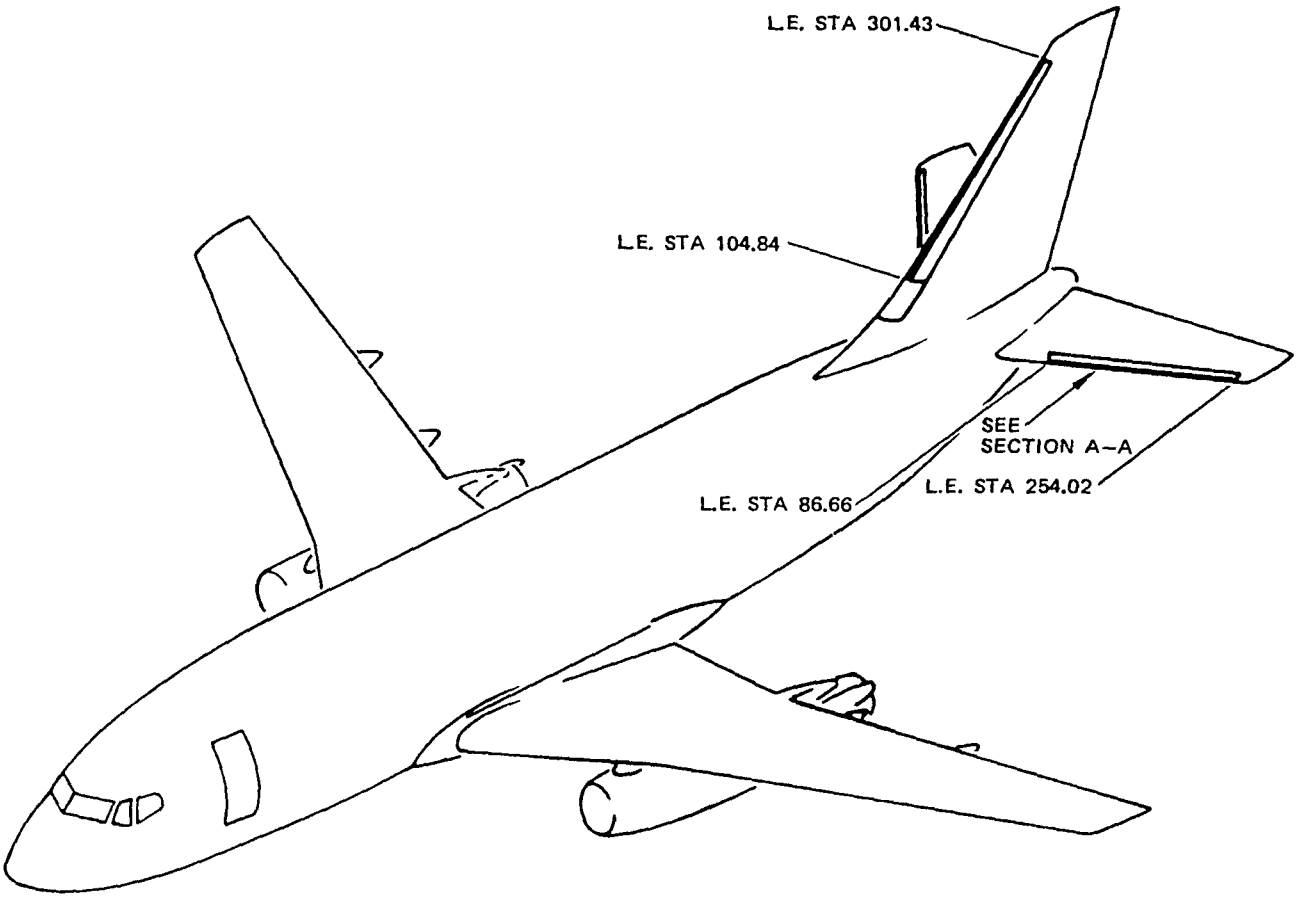


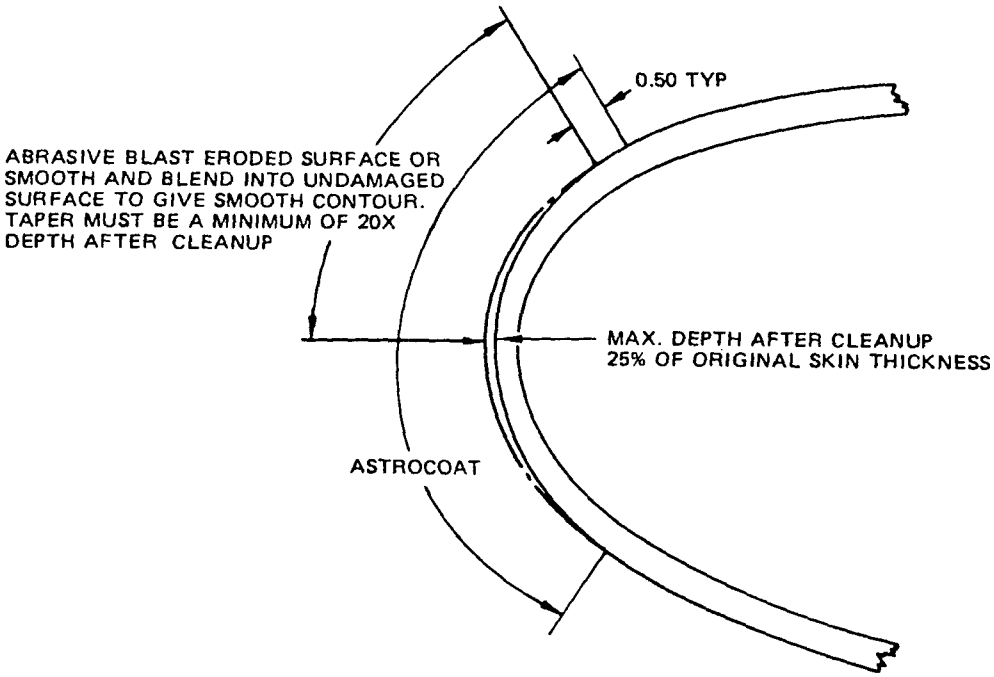


SECTION A–A

Allowable Erosion Damage-Leading Edge of Horizontal Stabilizer
Figure 4 (Sheet 3)

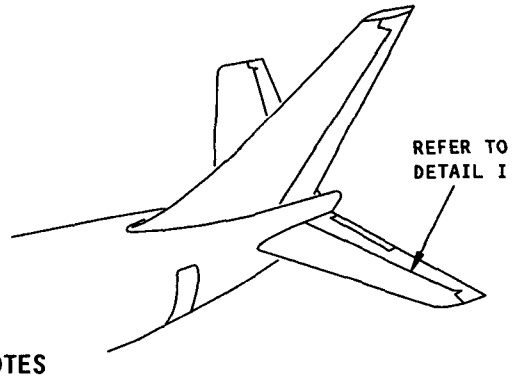


NOTES

- THE ALLOWABLE DAMAGE LIMITS GIVEN IN THIS FIGURE WILL NOT HAVE AN EFFECT ON A STRUCTURALLY SIGNIFICANT ITEM (SSI) GIVEN IN SRM 51-00-4, FIG. 3. THUS, NO CHANGE TO THE SUPPLEMENTAL STRUCTURAL INSPECTION DOCUMENT (SSID) INSPECTION PROGRAM IS NECESSARY.
- THIS FIGURE APPLIES TO AIRPLANES WITH HORIZONTAL STABILIZERS THAT ARE PRIMARILY METAL BUT HAVE FIBERGLASS/ARAMID/GRAPHITE/EPOXY TRAILING EDGE SKIN PANELS [A] [B].
- D = MAXIMUM DAMAGE DIMENSION.
- REFINISH REWORKED AREA AS GIVEN IN AMM 51-20.
- REFER TO SRM 51-70 FOR AERODYNAMIC SMOOTHNESS REQUIREMENTS. WHERE THE DAMAGE IS MORE THAN THE LIMITS SHOWN IN SRM 51-70 CONSIDERATION SHOULD BE GIVEN TO THE LOSS OF PERFORMANCE INVOLVED.
- TYPICAL DAMAGE TO A PANEL EDGEBAND MAY CONSIST OF EDGE CRUSHING, CRACKS OR DELAMINATION. DAMAGE AROUND HOLES MAY CONSIST OF OVALIZATION, FASTENER PULL-THROUGH OR CRACKS OUT OF HOLE. DAMAGE MAY REDUCE THE EFFECTIVE CROSS SECTIONAL AREA OF AN EDGEBAND. DAMAGE TO EDGES SHOULD BE BLENDED OUT TO LIMITATIONS GIVEN FOR COMPONENT.
- REFER TO SRM 51-40 FOR INVESTIGATION AND CLEANUP OF DAMAGE.

[A] REFER TO SRM 55-10-2 FOR EFFECTIVITY OF METAL STABILIZERS WITH GLASS/ARAMID/GRAPHITE/EPOXY TRAILING EDGE SKIN PANELS.

[B] REFER TO TABLE I FOR THE ALLOWABLE DAMAGE DATA.

[C] PROTECT DAMAGE FROM ENTRANCE OF WATER, SUNLIGHT OR OTHER FOREIGN MATTER BY SEALING WITH ALUMINUM FOIL TAPE (SPEED TAPE) 3M-Y436 OR EQUIVALENT. RECORD LOCATION AND INSPECT AT AIRPLANE "A" CHECK. REPLACE ALUMINUM FOIL TAPE IF ANY PEELING OR DETERIORATION OF TAPE IS EVIDENT. REPAIR DAMAGE PER REPAIR TABLE IN SRM 55-10-3 NO LATER THAN THE SUBSEQUENT "C" CHECK.

[D] CLEAN UP EDGE CRACKS AS GIVEN IN DETAIL II. NOT MORE THAN ONE FASTENER HOLE IN SIX MAY BE CRACKED OR DAMAGED. DAMAGE MUST NOT BE MORE THAN 10% OF EDGEBAND LENGTH PER SIDE. 1.50 MAXIMUM DIMENSION (D) IN HONEYCOMB AREA IS ALLOWED FOR EACH SQUARE FOOT OF AREA AND A MINIMUM OF 4D (EDGE TO EDGE) FROM ANY OTHER DAMAGE, FASTENER HOLE OR PANEL EDGE [C].

[E] IF FIBERS ARE DAMAGED, TREAT AS A CRACK. IF FIBERS ARE NOT DAMAGED, PROTECT AS GIVEN IN [C].

[F] DENTS GENERALLY RESULT IN FIBER DAMAGE OR DELAMINATION WHICH MAY NOT BE APPARENT USING VISUAL OR TAP TESTING METHODS OF DETECTION. DENTS UP TO 1.5 INCH DIAMETER MAXIMUM (D) ARE ALLOWED WHICH MUST BE A MINIMUM OF 4D (EDGE TO EDGE) FROM ANY OTHER DAMAGE, FASTENER HOLE OR PART EDGE. TREAT AS GIVEN IN NOTE [C]. IF FIBER DAMAGE OR DELAMINATION IS DETECTED, REFER TO THE APPLICABLE DAMAGE DATA IN TABLE [C].

[G] 1.50 INCH MAXIMUM DIMENSION (D) IN HONEYCOMB AREA IS PERMITTED FOR EACH SQUARE FOOT OF AREA AND A MINIMUM OF 4D (EDGE TO EDGE) FROM ANY OTHER DAMAGE, FASTENER HOLE OR PANEL EDGE. DO NOT CLEAN UP DAMAGE EXCEPT TO REMOVE RESIN BURRS EXTENDING INTO SURFACE CONTOUR [C].

[H] 1.50 INCH MAXIMUM DIMENSION (D) IN HONEY COMB AREA IS PERMITTED FOR EACH SQUARE FOOT OF AREA AND MINIMUM OF 4D (EDGE TO EDGE) FROM ANY OTHER DAMAGE, FASTENER HOLE OR PANEL EDGE. A MAXIMUM OF 0.10 INCH DELAMINATION FROM EDGE IS PERMITTED. PROTECT EDGE DAMAGE AS GIVEN IN [C].

| DESCRIPTION | CRACKS | NICKS, GOUGES AND SCRATCHES | DENTS | HOLES AND PUNCTURES | DELAMINATION |
|---|---|---|---|---|---|
| TRAILING EDGE PANELS | [D] | [E] | [F] | [G] | [H] |

TABLE I

Allowable Damage to Horizontal Stabilizer Glass/Aramid/Graphite/Epoxy Composite Trailing Edge Panels (Metal Stabilizer)
Figure 5 (Sheet 1)


BOEING PROPRIETARY - Copyright © - Unpublished Work - See title page for details.

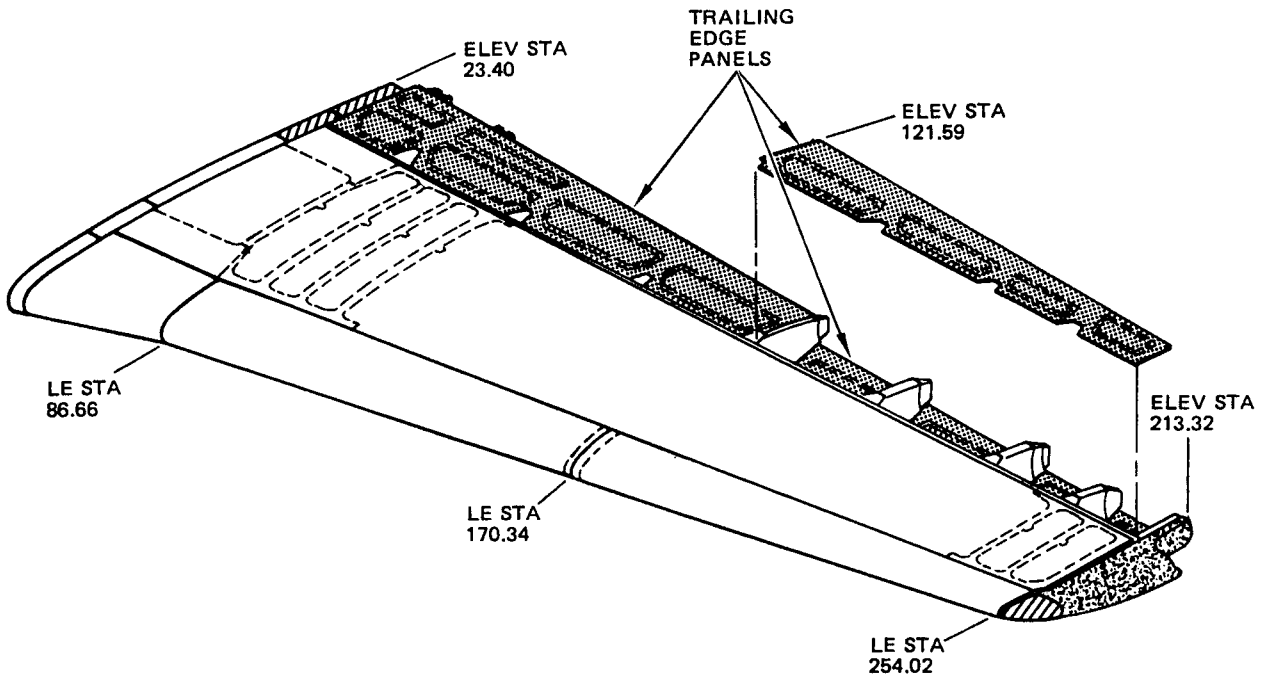


DETAIL I

Allowable Damage to Horizontal Stabilizer Glass/Aramid/Graphite/Epoxy Composite Trailing Edge Panels (Metal Stabilizer)
Figure 5 (Sheet 2)

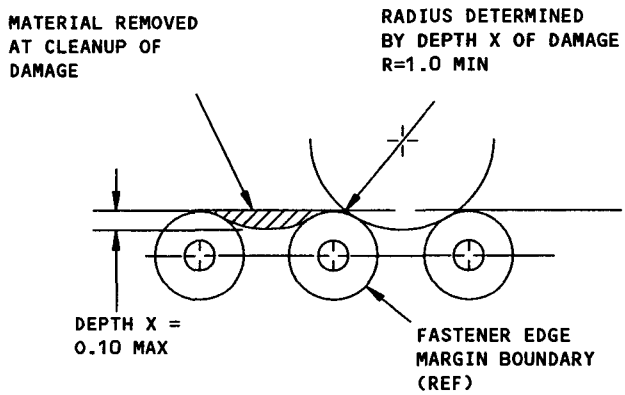


DAMAGE CLEANUP OF EDGES WHERE
FASTENER EDGE MARGINS DO NOT OVERLAP

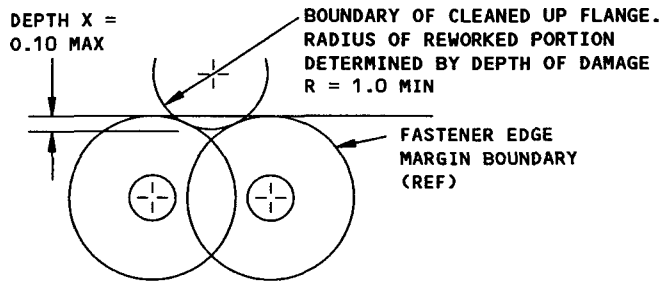


DAMAGE CLEANUP OF EDGES WHERE
FASTENER EDGE MARGINS OVERLAP

DETAIL II

Allowable Damage to Horizontal Stabilizer Glass/Aramid/Graphite/Epoxy
Composite Trailing Edge Panels (Metal Stabilizer)
Figure 5 (Sheet 3)


BOEING PROPRIETARY - Copyright © - Unpublished Work - See title page for details.

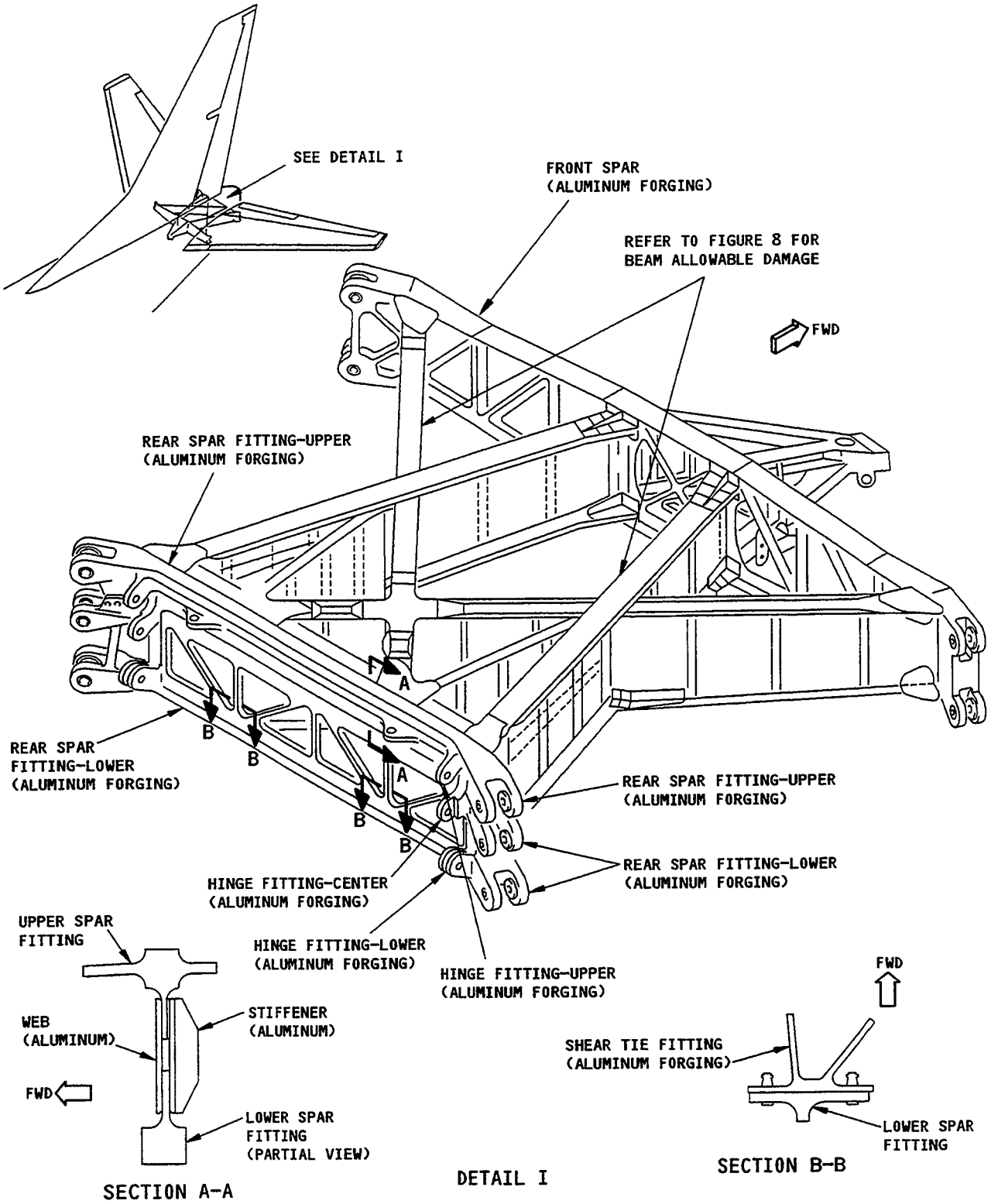


Horizontal Stabilizer Center Section Spar Allowable Damage
Figure 6 (Sheet 1)

| DESCRIPTION | CRACKS | NICKS, SCRATCHES, GOUGES, AND CORROSION | DENTS | HOLES |
|---|---|---|---|---|
| FRONT SPAR FORGING [H] | [A] | [B] [C] [J] | NOT PERMITTED | NOT PERMITTED |
| REAR SPAR FITTING - UPPER AND LOWER [H] | [A] | [B] [C] | NOT PERMITTED | NOT PERMITTED |
| SHEAR TIE FITTING [H] | [A] | [B] | NOT PERMITTED | NOT PERMITTED |
| WEB | [A] [I] | [D] [I] | [E] | [F] [I] |
| STIFFENERS | [A] | [D] | NOT PERMITTED | [G] |
| HINGE FITTING - UPPER [H] | [A] | [B] [C] | NOT PERMITTED | NOT PERMITTED |
| HINGE FITTING - CENTER [H] | [A] | [B] [C] | NOT PERMITTED | NOT PERMITTED |
| HINGE FITTING - LOWER [H] | [A] | [B] [C] | NOT PERMITTED | NOT PERMITTED |

ALLOWABLE DAMAGE FOR DETAIL I

NOTES

- DAMAGE, SUCH AS BLENDOUTS, TRIMOUTS, OR DENTS:
  - THAT OCCUR TO A STRUCTURALLY SIGNIFICANT ITEM (SSI) GIVEN IN SRM 51-00-4, FIG. 3 AND,
  - THAT ARE WITHIN THE ALLOWABLE DAMAGE LIMITS OF THE BOEING SRM,

  DO NOT HAVE AN EFFECT ON THE DAMAGE TOLERANCE PROPERTIES OF THE SSI. THEREFORE, EXISTING SUPPLEMENTAL STRUCTURAL INSPECTION DOCUMENT (SSID) INSPECTION PROGRAMS REMAIN EFFECTIVE.
- FIND AND REMOVE THE DAMAGE. REFER TO SRM 51-10-1.
- APPLY A CHEMICAL CONVERSION COATING TO THE REWORKED ALUMINUM SURFACES. REFER TO SRM 51-10-2.
- REFINISH THE REWORKED SURFACES. REFER TO AMM 51-20.
- REFER TO SRM 51-10-6 FOR CORROSION REMOVAL PROCEDURES FOR ALUMINUM.
- REFER TO SOPM 20-20-02 FOR PENETRANT METHODS OF INSPECTION.

[A] REMOVE CRACKS ON AN EDGE AS SHOWN IN DETAILS II, VI, AND VII. OTHER CRACKS, DENTS, HOLES, AND PUNCTURES ARE NOT PERMITTED.

USE ONE OF THESE PROCEDURES TO MAKE SURE THERE ARE NO CRACKS AFTER REWORK:

- DYE PENETRANT INSPECTION. REFER TO SOPM 20-20-02.
- HIGH FREQUENCY EDDY CURRENT INSPECTION. REFER TO SOPM 20-20-02 AND NDT PART 6, 53-40-04.

[B] REMOVE NICKS, GOUGES, SCRATCHES, AND CORROSION ON AN EDGE AS SHOWN IN DETAILS II, VI, AND VII. REMOVE OTHER NICKS, GOUGES, SCRATCHES, AND CORROSION AS SHOWN IN DETAIL III.

USE THE DYE PENETRANT PROCEDURE TO MAKE SURE THERE ARE NO NICKS, GOUGES, OR CORROSION AFTER REWORK. REFER TO SOPM 20-20-02.

[C] REMOVE NICKS, GOUGES, SCRATCHES, AND CORROSION ON A LUG AS SHOWN IN DETAIL IX. A MAXIMUM OF 0.01 INCH DAMAGE REMOVAL IS PERMITTED NEAR A BUSHING.

[D] REMOVE NICKS, GOUGES, SCRATCHES, AND CORROSION ON AN EDGE AS SHOWN IN DETAILS II, III, V, VI, AND VII.

USE THE DYE PENETRANT PROCEDURE TO MAKE SURE THERE ARE NO NICKS, GOUGES, OR CORROSION AFTER REWORK. REFER TO SOPM 20-20-02.

[E] DENTS ARE PERMITTED AS SHOWN IN DETAIL IV.

Horizontal Stabilizer Center Section Spar Allowable Damage
Figure 6 (Sheet 2)


BOEING PROPRIETARY - Copyright © - Unpublished Work - See title page for details.

NOTES (CONTINUED)

F HOLES ARE PERMITTED TO A MAXIMUM DIAMETER OF 0.25 INCH. THE HOLE MUST BE MORE THAN 1.00 INCH AWAY FROM OTHER DAMAGE, HOLES, OR MATERIAL EDGE. FILL THE HOLE WITH A RIVET MADE OF 2117-T3 OR 2117-T4 ALUMINUM ALLOY. INSTALL THE RIVET WET WITH BMS 5-95 SEALANT.

G HOLES AND PUNCTURES ARE PERMITTED AS SHOWN IN DETAIL VIII.

H SHOT PEEN THE REWORKED SURFACES. REFER TO SRM 51-10-8.

I UP TO 10 PERCENT OF THE CROSS-SECTIONAL AREA OF THE WEB CAN BE REMOVED. THIS INCLUDES DAMAGE CLEANUP AND ALL FASTENER HOLES.

J REMOVE GOUGE DAMAGE BY THE SLIDING SEAL PER DETAIL X.

Horizontal Stabilizer Center Section Spar Allowable Damage
Figure 6 (Sheet 3)

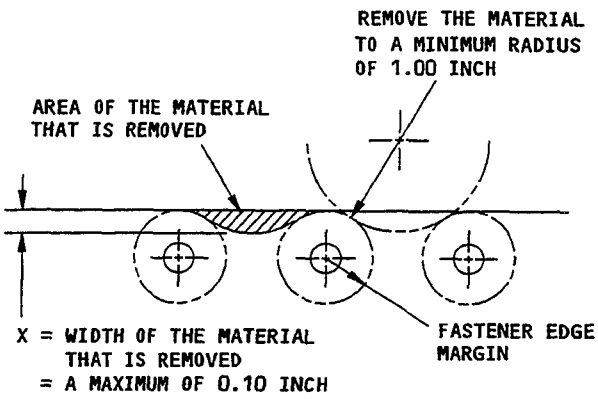


REMOVAL OF DAMAGED MATERIAL AT EDGES WHERE THE FASTENER EDGE MARGINS DO NOT HAVE AN OVERLAP

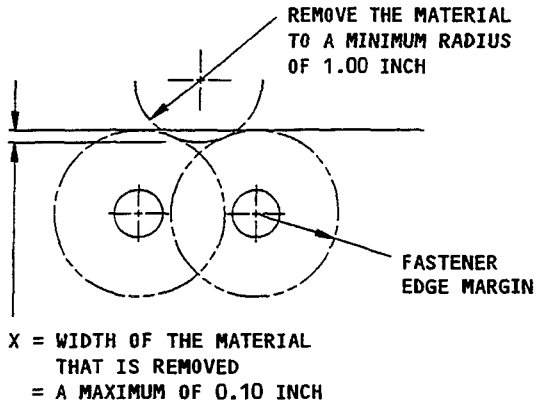


REMOVAL OF DAMAGED MATERIAL AT EDGES WHERE THE FASTENER EDGE MARGINS HAVE AN OVERLAP

DETAIL II

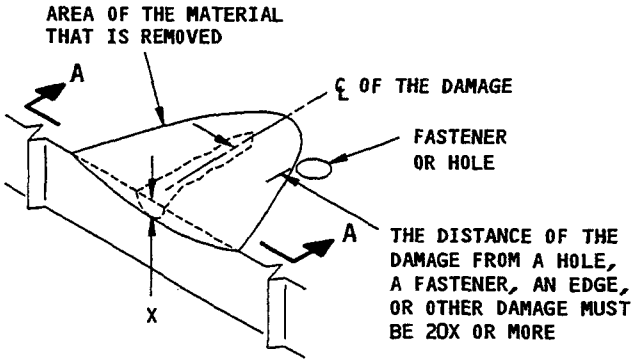


REMOVAL OF DAMAGED MATERIAL ON A SURFACE

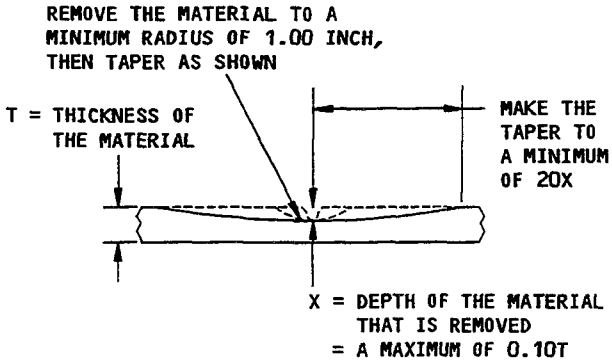


SECTION A-A

DETAIL III

Horizontal Stabilizer Center Section Spar Allowable Damage
Figure 6 (Sheet 4)

F51966

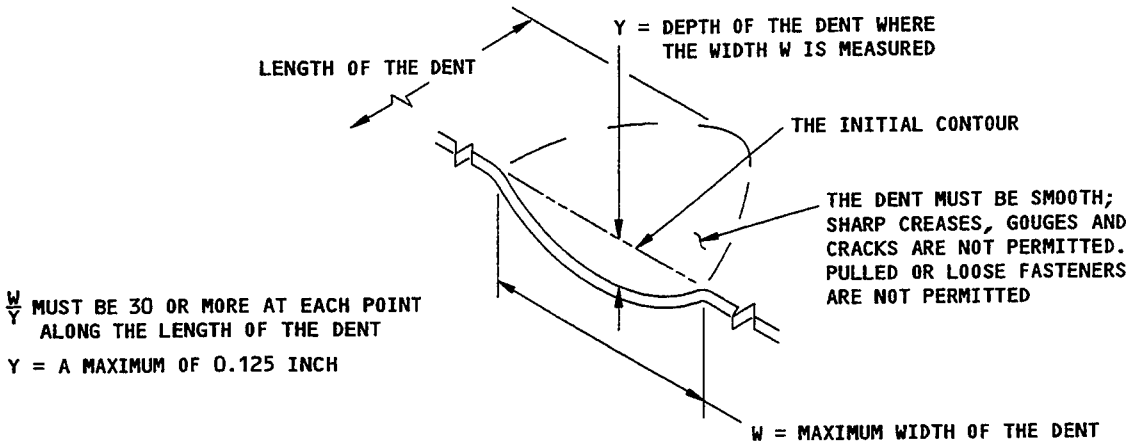


DENT THAT IS PERMITTED

DETAIL IV

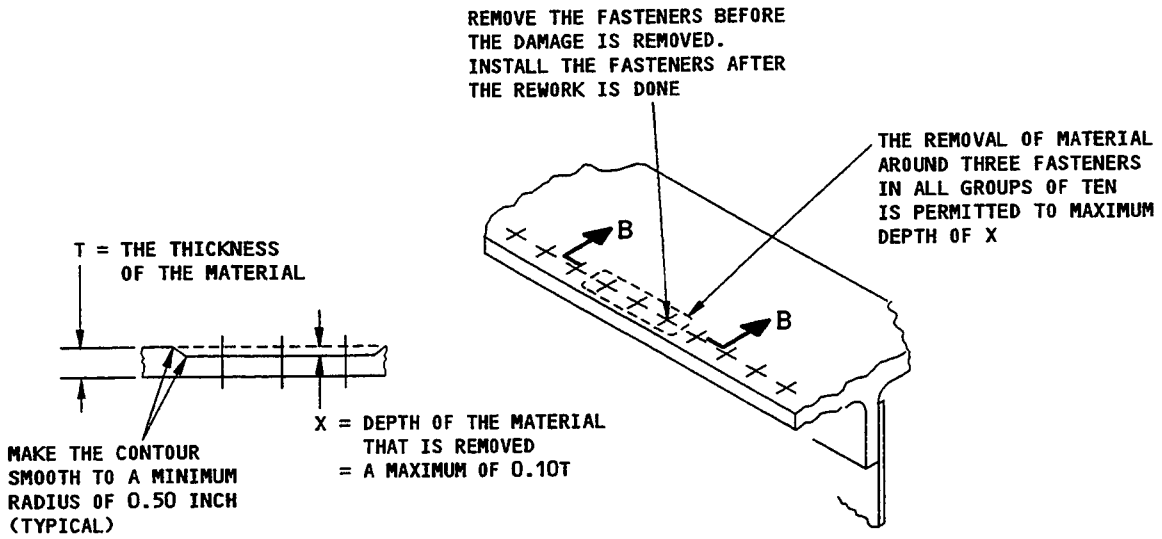


SECTION B-B

REMOVAL OF DAMAGE AROUND THE FASTENERS ON AN EDGE OR A SURFACE

DETAIL V

Horizontal Stabilizer Center Section Spar Allowable Damage
Figure 6 (Sheet 5)

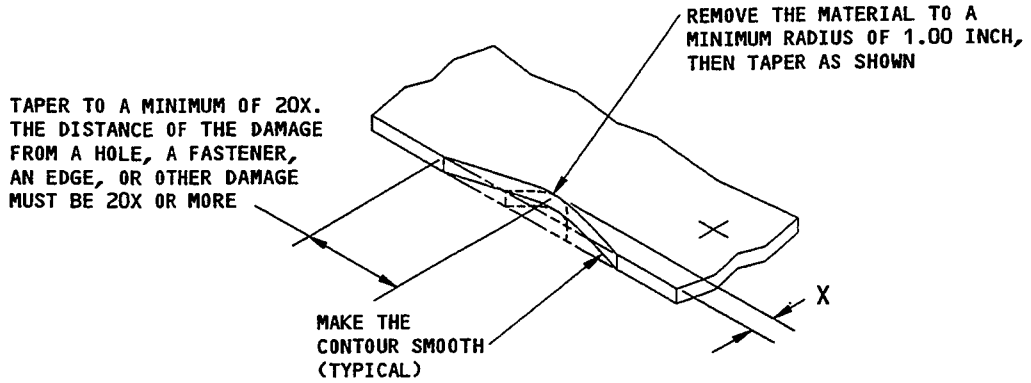


X = WIDTH OF THE MATERIAL THAT IS REMOVED
= A MAXIMUM OF 0.10 INCH

REMOVAL OF DAMAGED MATERIAL AT AN EDGE OF A METAL SKIN OR WEB

DETAIL VI

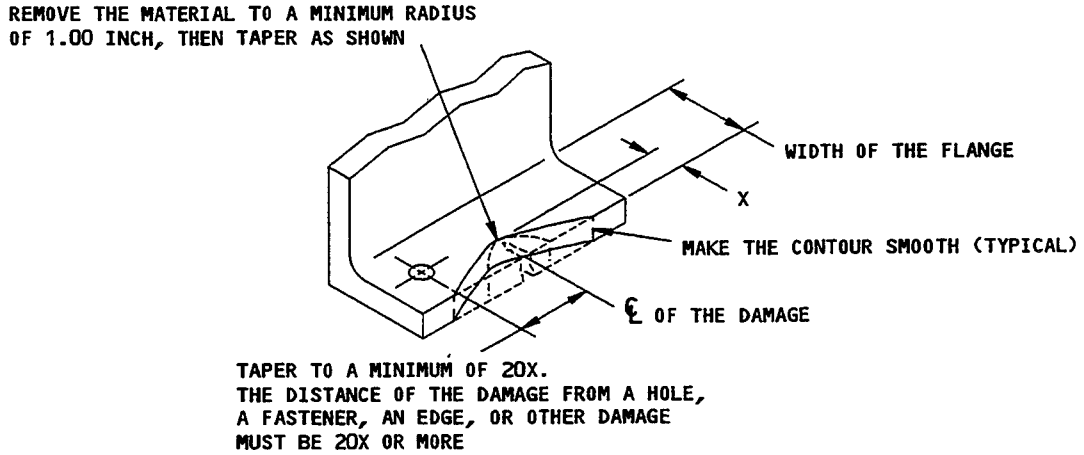


X = WIDTH OF THE MATERIAL REMOVED
= A MAXIMUM OF 10 PERCENT OF THE WIDTH OF THE FLANGE OR 0.05, THAT WHICH IS LESS

REMOVAL OF DAMAGED MATERIAL AT AN EDGE

DETAIL VII

Horizontal Stabilizer Center Section Spar Allowable Damage
Figure 6 (Sheet 6)

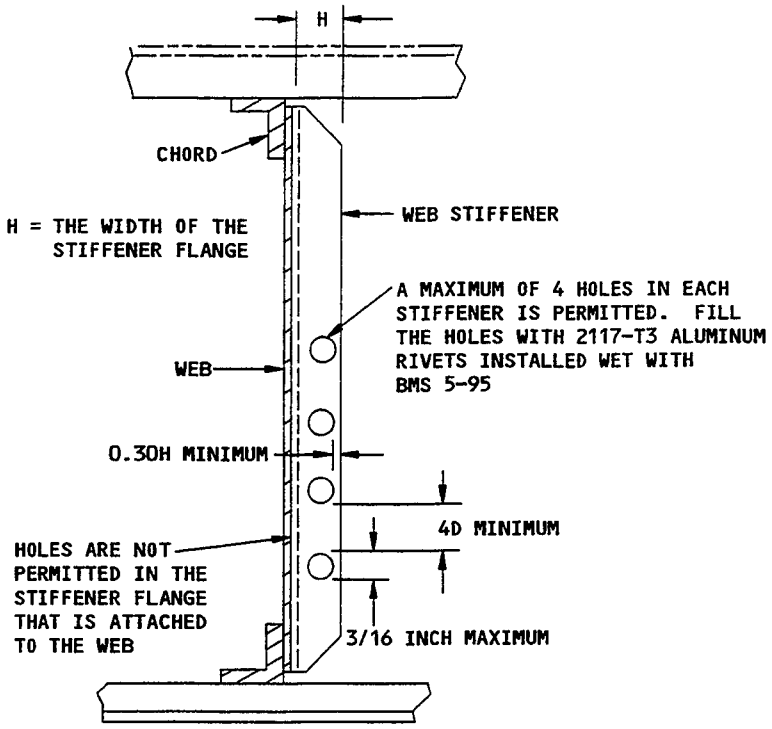


HOLES THAT ARE PERMITTED TO REMOVE DAMAGED MATERIAL IN WEB STIFFENERS
DETAIL VIII

Horizontal Stabilizer Center Section Spar Allowable Damage
Figure 6 (Sheet 7)

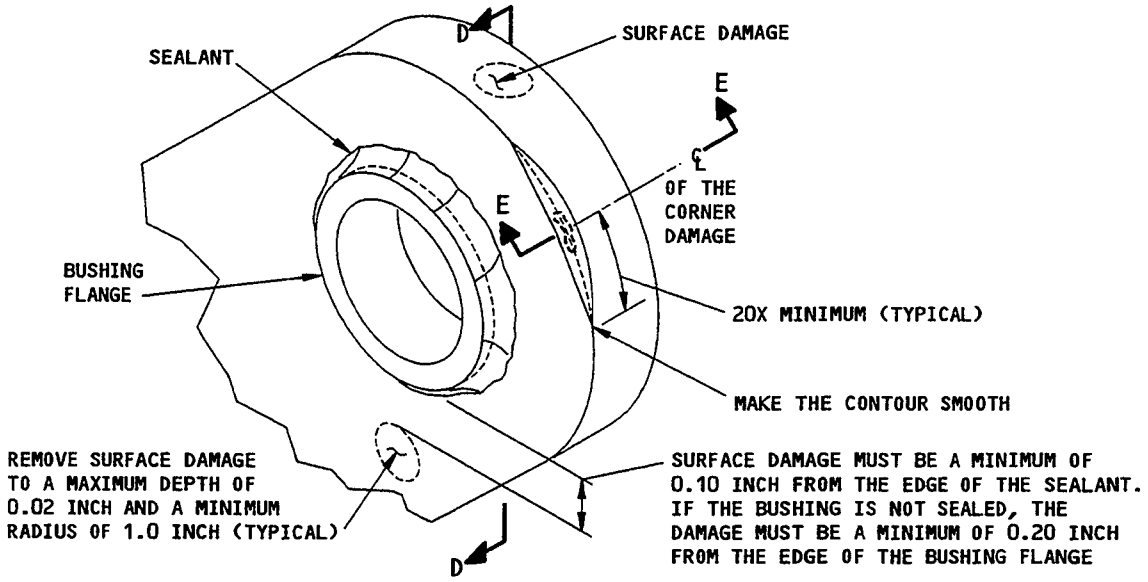


NOTE: DAMAGED SEALANT IS NOT PERMITTED. IF THE SEALANT IS DAMAGED, LOOK FOR MIGRATION OR ROTATION OF THE BUSHING. IF THERE IS NO MIGRATION, ROTATION, OR CORROSION, REMOVE THE DAMAGED SEALANT AND APPLY A NEW FILLET SEAL.

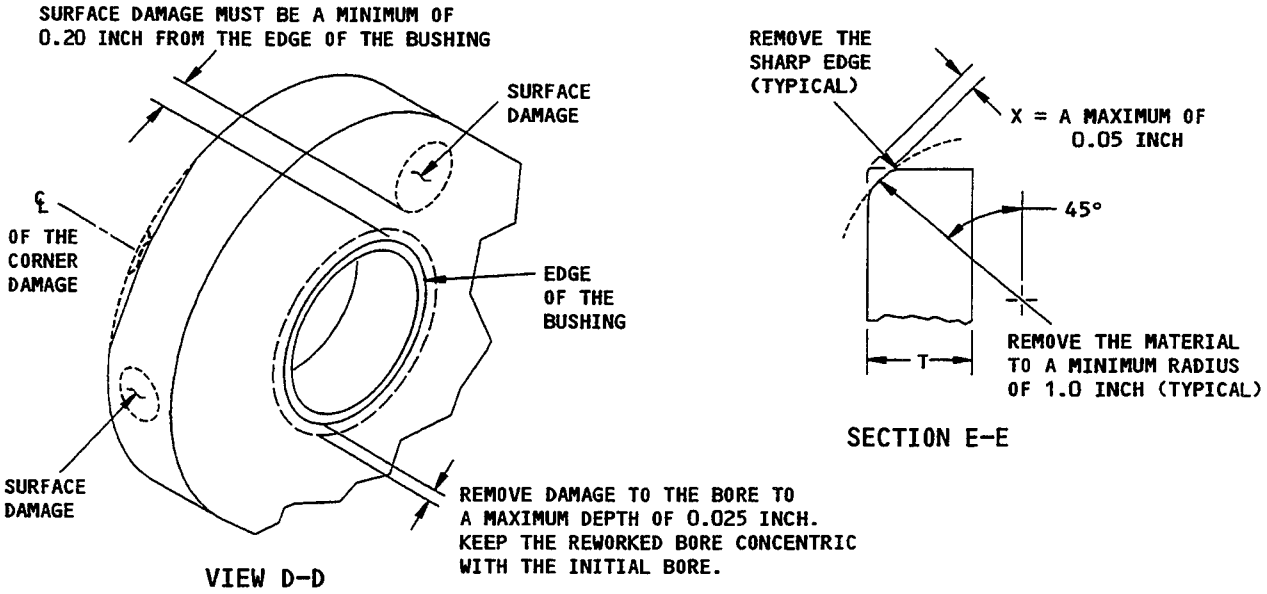


REMOVAL OF SURFACE AND EDGE DAMAGE
FROM A LUG THAT HAS A BUSHING

DETAIL IX

Horizontal Stabilizer Center Section Spar Allowable Damage
Figure 6 (Sheet 8)

F51977

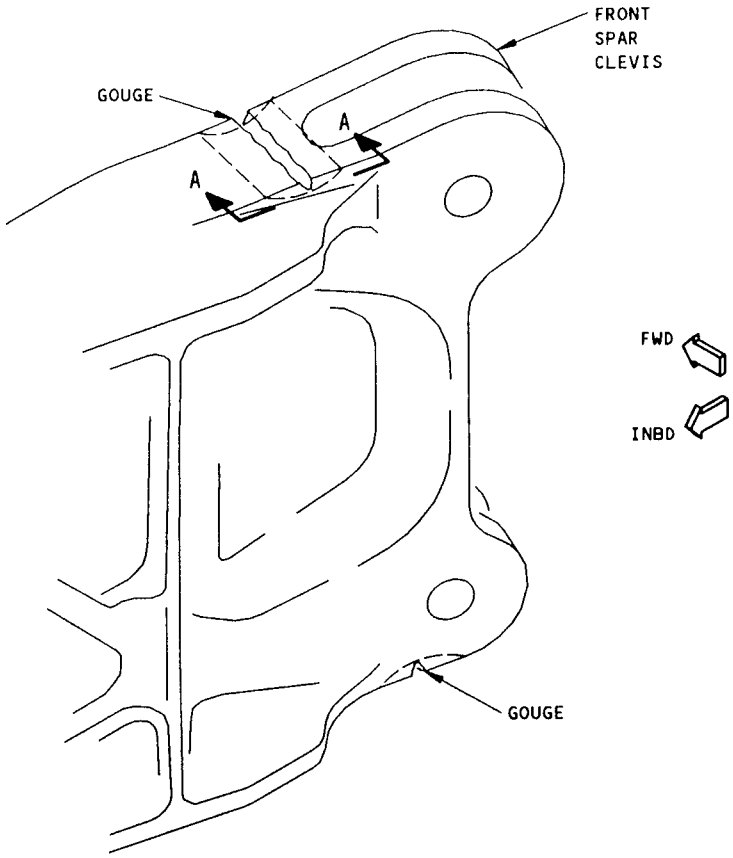


DAMAGE CLEANUP IN THE VICINITY OF THE FRONT SPAR LUG

DETAIL X

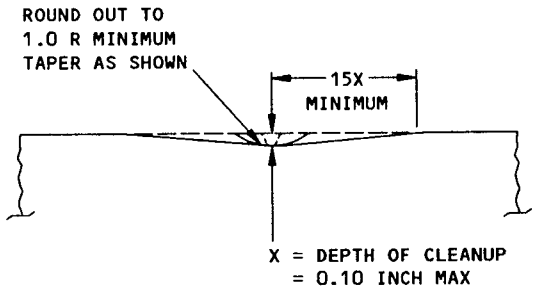


SECTION A-A
(TYPICAL)

Horizontal Stabilizer Center Section Spar Allowable Damage
Figure 6 (Sheet 9)

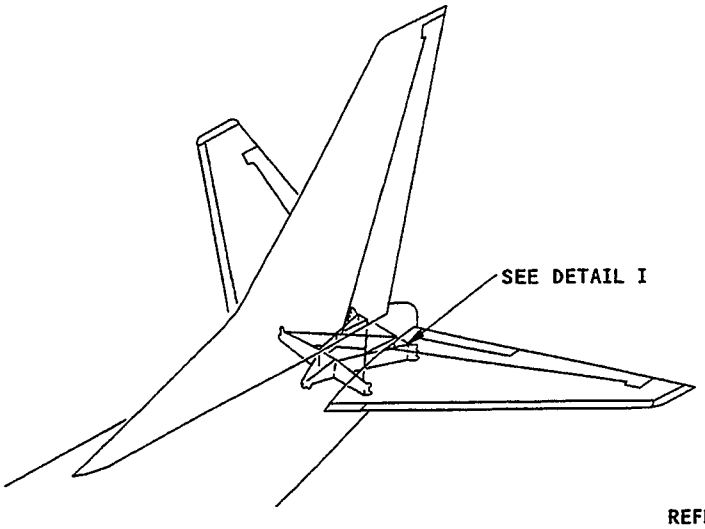


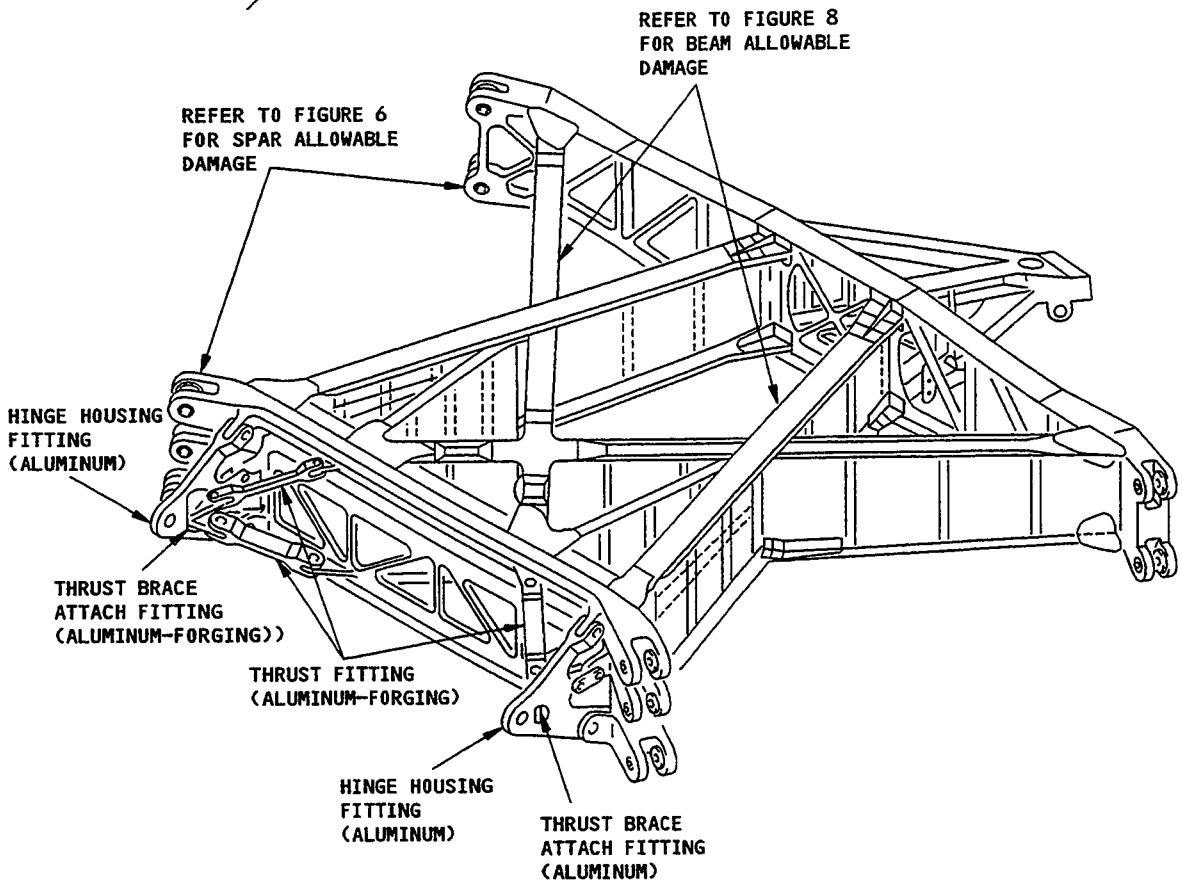


HORIZONTAL STABILIZER CENTER SECTION
DETAIL I

Horizontal Stabilizer Center Section Attach Fitting Allowable Damage
Figure 7 (Sheet 1)

| DESCRIPTION | CRACKS | NICKS, SCRATCHES, GOUGES AND CORROSION | DENTS | HOLES |
|---|---|---|---|---|
| HINGE HOUSING FITTING | A | B | NOT PERMITTED | NOT PERMITTED |
| THRUST BRACE FITTING | A | B | NOT PERMITTED | NOT PERMITTED |
| THRUST FITTING | A | B | NOT PERMITTED | NOT PERMITTED |

ALLOWABLE DAMAGE FOR DETAIL I

NOTES

- DAMAGE, SUCH AS BLENDOUTS, TRIMOUTS OR DENTS:
  - THAT OCCUR TO A STRUCTURALLY SIGNIFICANT ITEM (SSI) GIVEN IN SRM 51-00-4, FIG. 3 AND,
  - THAT ARE WITHIN THE ALLOWABLE DAMAGE LIMITS OF THE BOEING SRM,

  DO NOT HAVE AN EFFECT ON THE DAMAGE TOLERANCE PROPERTIES OF THE SSI. THEREFORE, EXISTING SUPPLEMENTAL STRUCTURAL INSPECTION DOCUMENT (SSID) INSPECTION PROGRAMS REMAIN EFFECTIVE.
- THE ALLOWABLE DAMAGE LIMITS GIVEN IN THIS FIGURE WILL NOT HAVE AN EFFECT ON A STRUCTURALLY SIGNIFICANT ITEM (SSI) GIVEN IN SRM 51-00-4, FIG. 3. THUS, NO CHANGE TO THE SUPPLEMENTAL STRUCTURAL INSPECTION DOCUMENT (SSID) INSPECTION PROGRAM IS NECESSARY.
- FIND AND REMOVE THE DAMAGE. REFER TO SRM 51-10-1.
- APPLY A CHEMICAL CONVERSION COATING TO THE REWORKED SURFACES. REFER TO SRM 51-10-2.
- REFER TO SRM 51-10-06 FOR CORROSION REMOVAL PROCEDURES FOR ALUMINUM.
- REFER TO SOPM 20-20-02 FOR PENATRANT METHODS OF INSPECTION.
- SHOT PEEN THE REWORKED SURFACES. REFER TO SRM 51-10-8.

A REMOVE CRACKS ON AN EDGE AS SHOWN IN DETAILS II AND V. OTHER CRACKS ARE NOT PERMITTED.

USE ONE OF THESE PROCEDURES TO MAKE SURE THERE ARE NO CRACKS AFTER REWORK.
- DYE PENETRANT INSPECTION. REFER TO SOPM 20-20-02.
- HIGH FREQUENCY EDDY CURRENT INSPECTION. REFER TO SOPM 20-20-02 AND NDT PART 6, 53-40-04.

B REMOVE NICKS, GOUGES, SCRATCHES AND CORROSION ON AN EDGE AS SHOWN IN DETAILS II AND V. REMOVE OTHER NICKS, GOUGES, SCRATCHES AND CORROSION AS SHOWN IN DETAIL III. REMOVE NICKS, GOUGES, SCRATCHES AND CORROSION ON A LUG AS SHOWN IN DETAIL IV. A MAXIMUM OF 0.01 INCH DAMAGE REMOVAL IS PERMITTED NEAR A BUSHING.

USE THE DYE PENETRANT PROCEDURE TO MAKE SURE THERE ARE NO NICKS, GOUGES OR CORROSION AFTER REWORK. REFER TO SOPM 20-20-02.

Horizontal Stabilizer Center Section Fitting Allowable Damage
Figure 7 (Sheet 2)


BOEING PROPRIETARY - Copyright © - Unpublished Work - See title page for details.

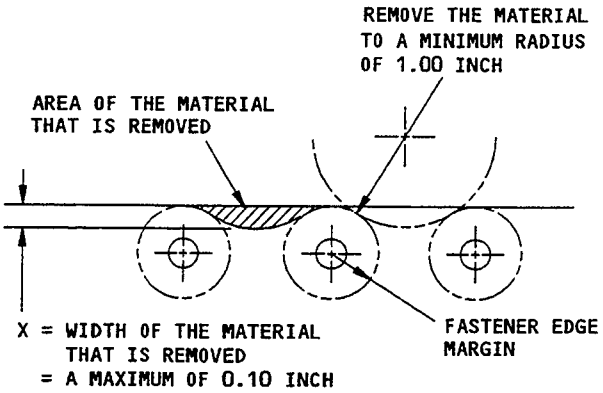


REMOVAL OF DAMAGED MATERIAL AT EDGES WHERE THE FASTENER EDGE MARGINS DO NOT HAVE AN OVERLAP

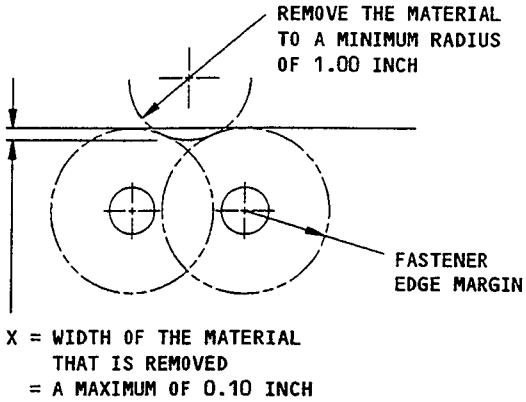


REMOVAL OF DAMAGED MATERIAL AT EDGES WHERE THE FASTENER EDGE MARGINS HAVE AN OVERLAP

DETAIL II

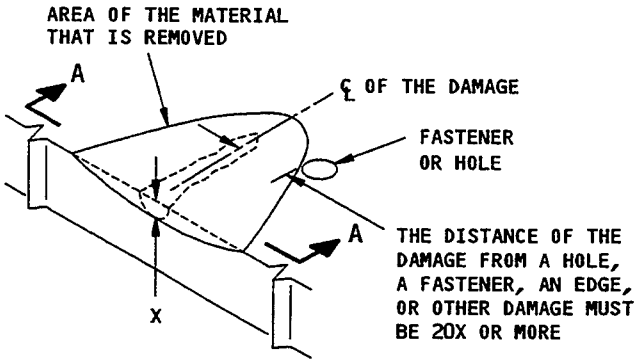


REMOVAL OF DAMAGED MATERIAL ON A SURFACE

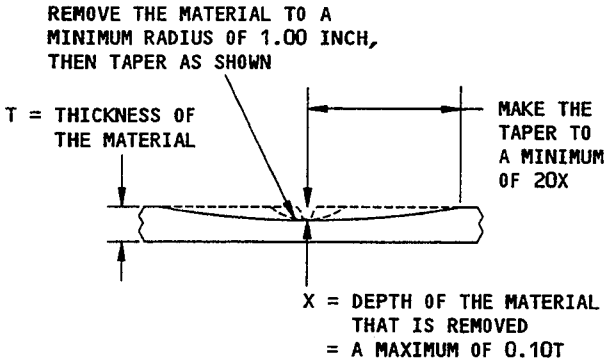


SECTION A-A

DETAIL III

Horizontal Stabilizer Center Section Fitting Allowable Damage
Figure 7 (Sheet 3)

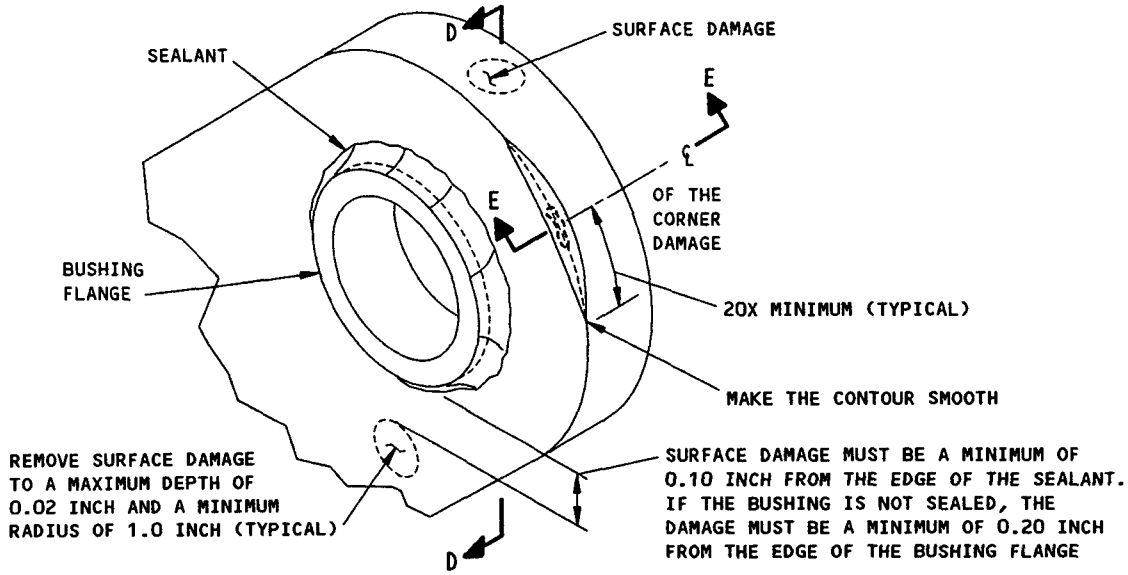


NOTE: DAMAGED SEALANT IS NOT PERMITTED. IF THE SEALANT IS DAMAGED, LOOK FOR MIGRATION OR ROTATION OF THE BUSHING. IF THERE IS NO MIGRATION, ROTATION, OR CORROSION, REMOVE THE DAMAGED SEALANT AND APPLY A NEW FILLET SEAL.

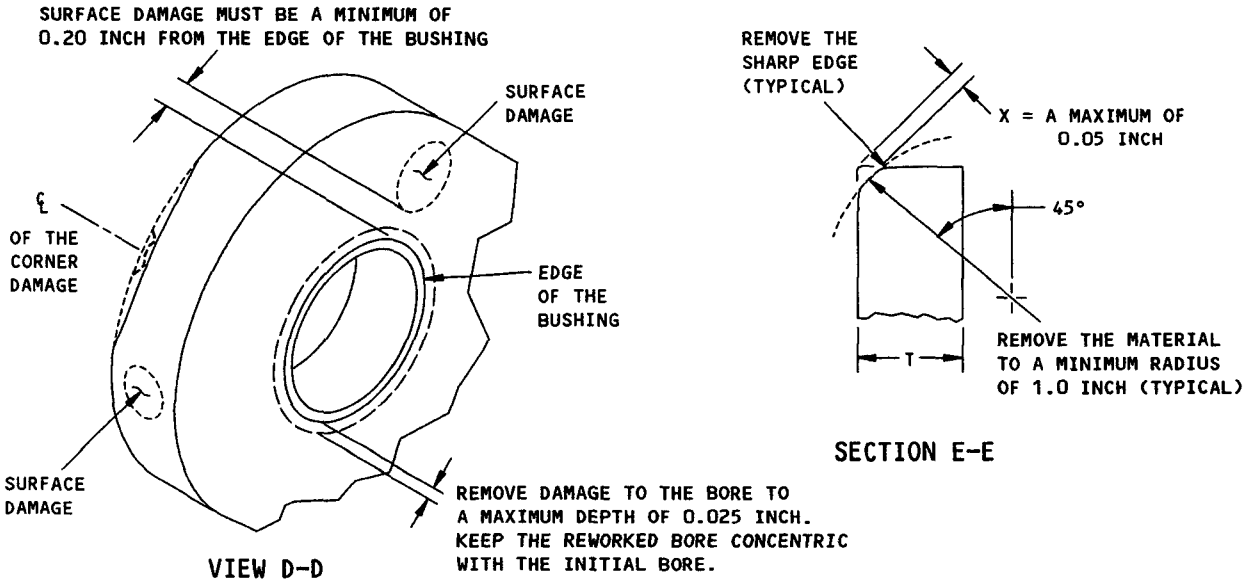


REMOVAL OF SURFACE AND EDGE DAMAGE
FROM A LUG THAT HAS A BUSHING

DETAIL IV

Horizontal Stabilizer Center Section Fitting Allowable Damage
Figure 7 (Sheet 4)



BOEING PROPRIETARY - Copyright © - Unpublished Work - See title page for details.

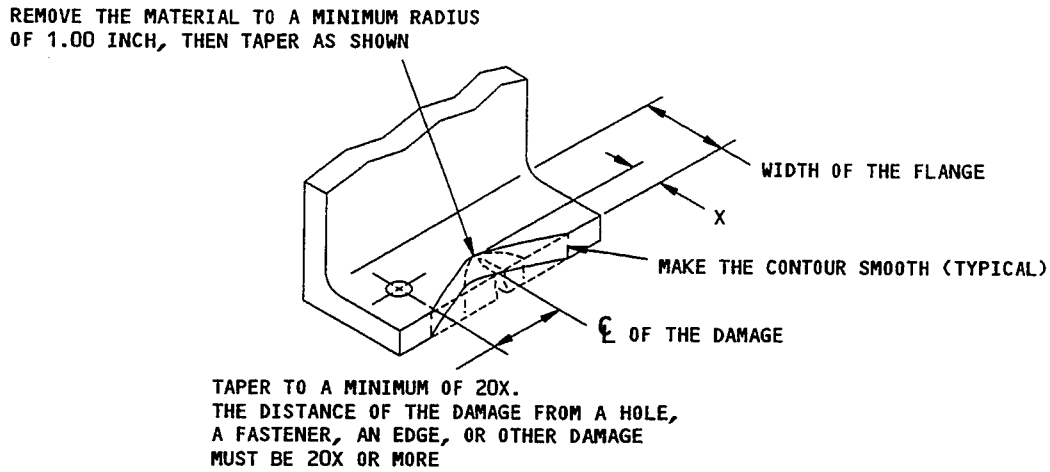


X = WIDTH OF THE MATERIAL REMOVED
= A MAXIMUM OF 10 PERCENT OF THE WIDTH OF THE FLANGE OR 0.05, THAT WHICH IS LESS

REMOVAL OF DAMAGED MATERIAL AT AN EDGE
DETAIL V

Horizontal Stabilizer Center Section Fitting Allowable Damage
Figure 7 (Sheet 5)

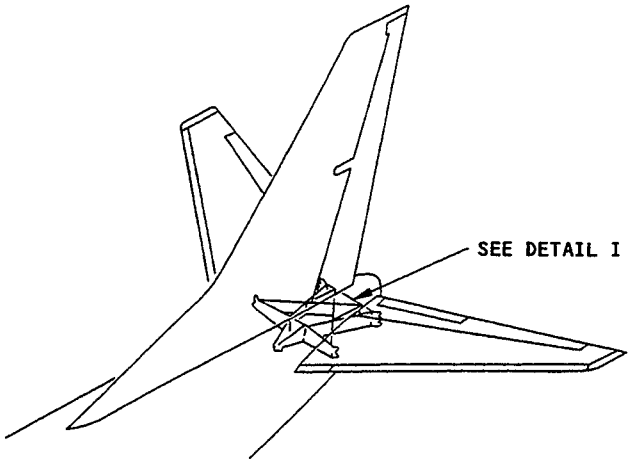


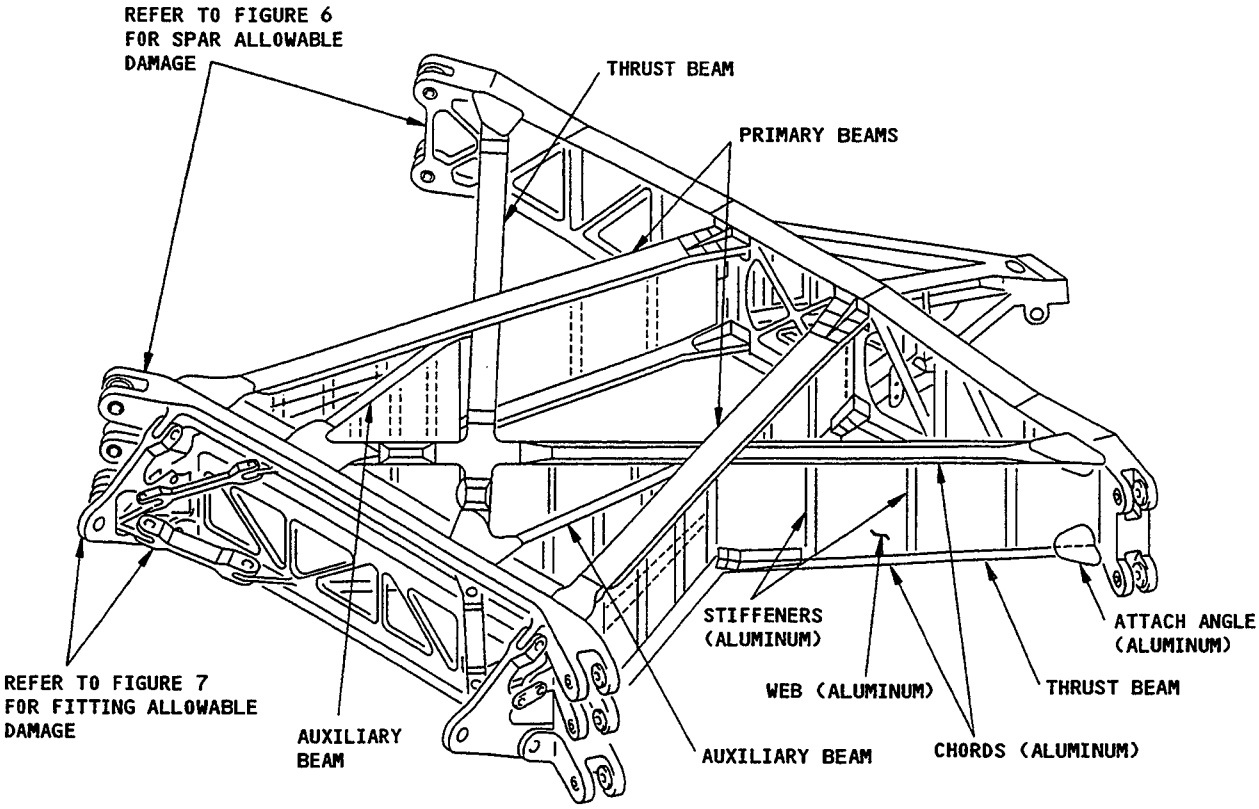


DETAIL I

Horizontal Stabilizer Center Section Beam Allowable Damage
Figure 8 (Sheet 1)

| DESCRIPTION | CRACKS | NICKS, GOUGES, SCRATCHES, AND CORROSION | DENTS | HOLES AND PUNCTURES |
|---|---|---|---|---|
| CHORDS | A | B | NOT PERMITTED | NOT PERMITTED |
| STIFFENERS | A | B | NOT PERMITTED | D |
| WEBS | A | B | C | E |
| ATTACH ANGLES | A | B | NOT PERMITTED | NOT PERMITTED |

ALLOWABLE DAMAGE DATA FOR DETAIL I

NOTES

- THE ALLOWABLE DAMAGE LIMITS GIVEN IN THIS FIGURE WILL NOT HAVE AN EFFECT ON A STRUCTURALLY SIGNIFICANT ITEM (SSI) GIVEN IN SRM 51-00-4, FIG. 3. THUS, NO CHANGE TO THE SUPPLEMENTAL STRUCTURAL INSPECTION DOCUMENT (SSID) INSPECTION PROGRAM IS NECESSARY.
- EXAMINE AND REMOVE THE DAMAGE. REFER TO SRM 51-10-1.
- APPLY A CHEMICAL CONVERSION COATING TO THE REWORKED SURFACES. REFER TO SRM 51-10-2.
- REFER TO 51-10-06 FOR CORROSION REMOVAL PROCEDURES FOR ALUMINUM.
- REFER TO SOPM 20-20-02 FOR PENETRANT METHODS OF INSPECTION.

A REMOVE CRACKS ON AN EDGE AS SHOWN IN DETAILS II AND VI. OTHER CRACKS, DENTS, HOLES AND PUNCTURES ARE NOT PERMITTED.

USE ONE OF THESE PROCEDURES TO MAKE SURE THERE ARE NO CRACKS AFTER REWORK.

- DYE PENETRANT INSPECTION. REFER TO SOPM 20-20-02.
- HIGH FREQUENCY EDDY CURRENT INSPECTION. REFER TO SOPM, 20-20-02 AND NDT PART 6, 53-40-04.

B REMOVE NICKS, GOUGES, SCRATCHES AND CORROSION ON AN EDGE AS SHOWN IN DETAILS II, V AND VI. REMOVE OTHER NICKS, GOUGES, SCRATCHES AND CORROSION AS SHOWN IN DETAIL III.

USE THE DYE PENETRANT PROCEDURE TO MAKE SURE THERE ARE NO NICKS, GOUGES OR CORROSION AFTER REWORK. REFER TO SOPM 20-20-02.

C DENTS ARE PERMITTED AS SHOWN IN DETAIL IV.

D HOLES AND PUNCTURES ARE PERMITTED AS SHOWN IN DETAIL VII.

E HOLES ARE PERMITTED TO A MAXIMUM DIAMETER OF 0.25 INCH. THE HOLE MUST BE MORE THAN 1.00 INCH AWAY FROM OTHER DAMAGE, HOLES, OR MATERIAL EDGE. FILL THE HOLE WITH A RIVET MADE OF 2117-T3 OR 2117-T4 ALUMINUM ALLOY. INSTALL THE RIVET WET WITH BMS 5-95 SEALANT.

Horizontal Stabilizer Center Section Beam Allowable Damage
Figure 8 (Sheet 2)


BOEING PROPRIETARY - Copyright © - Unpublished Work - See title page for details.

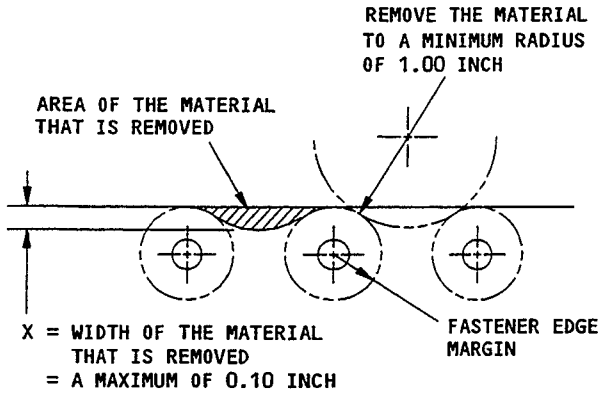


REMOVAL OF DAMAGED MATERIAL AT EDGES WHERE THE FASTENER EDGE MARGINS DO NOT HAVE AN OVERLAP

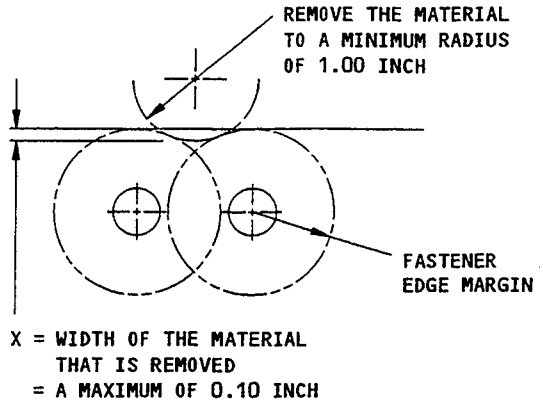


REMOVAL OF DAMAGED MATERIAL AT EDGES WHERE THE FASTENER EDGE MARGINS HAVE AN OVERLAP

DETAIL II

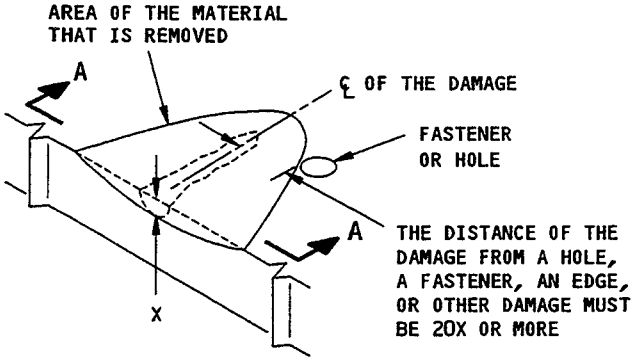


REMOVAL OF DAMAGED MATERIAL ON A SURFACE

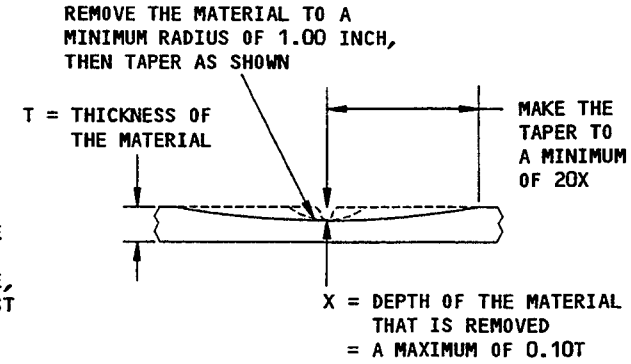


SECTION A-A

DETAIL III

Horizontal Stabilizer Center Section Beam Allowable Damage
Figure 8 (Sheet 3)

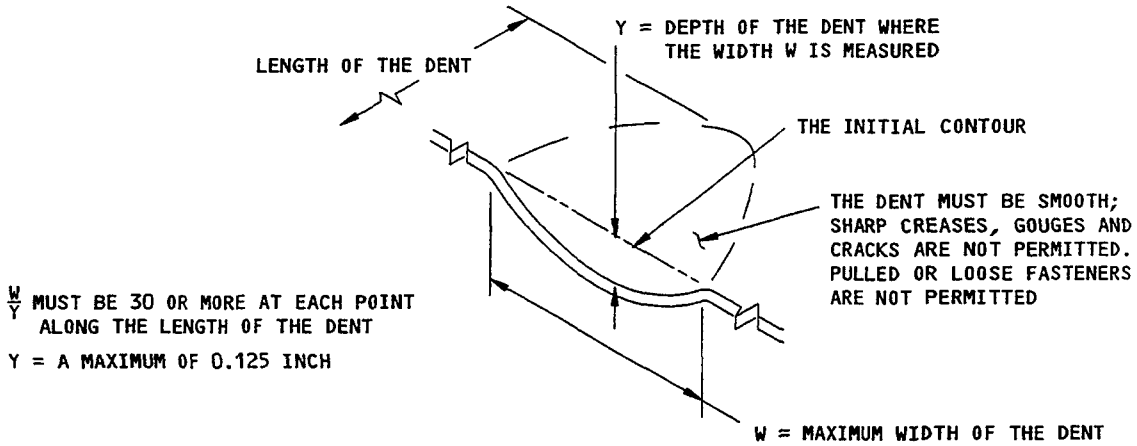


DENT THAT IS PERMITTED

DETAIL IV

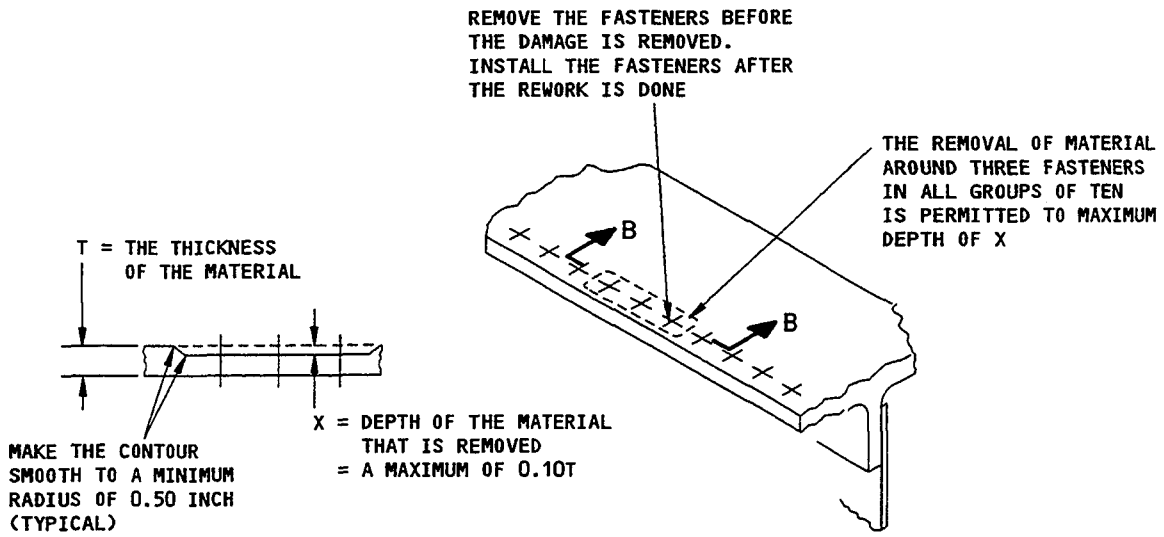


SECTION B-B

REMOVAL OF DAMAGE AROUND THE FASTENERS ON AN EDGE OR A SURFACE

DETAIL V

Horizontal Stabilizer Center Section Beam Allowable Damage
Figure 8 (Sheet 4)

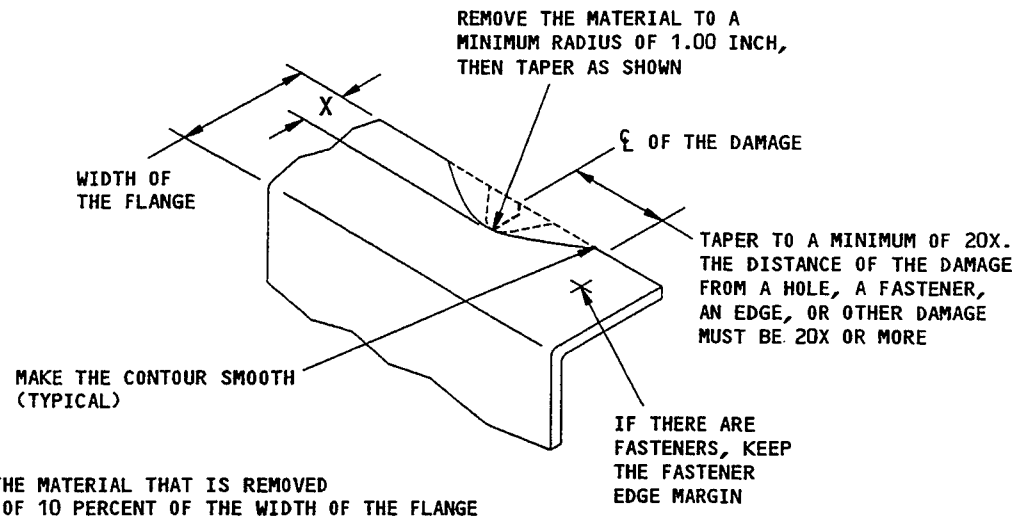


X = WIDTH OF THE MATERIAL THAT IS REMOVED
= A MAXIMUM OF 10 PERCENT OF THE WIDTH OF THE FLANGE

REMOVAL OF DAMAGED MATERIAL ON AN EDGE

DETAIL VI

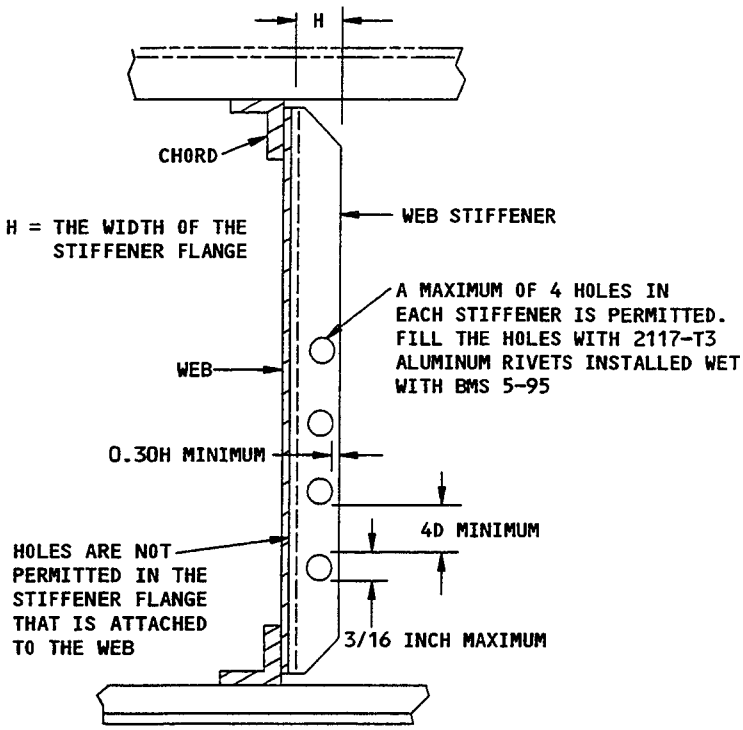


HOLES THAT ARE PERMITTED TO REMOVE DAMAGED MATERIAL IN WEB STIFFENERS

DETAIL VII

Horizontal Stabilizer Center Section Beam Allowable Damage
Figure 8 (Sheet 5)

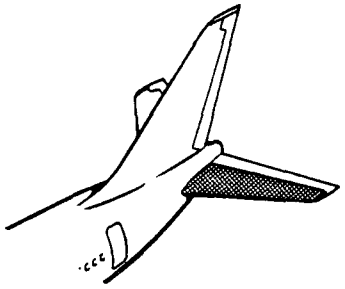

| SKIN REPAIR INDEX | |
|---|---|
| LOCATION OF DAMAGE | REPAIR FIG NO |
| LEADING EDGE SKIN | 55-10-3, Fig 1,2 |
| INTERSPAR SKIN | 55-10-3, Fig 3, 4, 5, 6, 7, 8 |
| TRAILING EDGE SKIN FIBERGLASS | 51-40-9 |
| TRAILING EDGE SKIN (GLASS/ ARAMID/GRAPHITE/EPOXY) | 55-10-3, FIG 10 |

NOTES

[A] PLY ORIENTATION CONVENTION: THE PLY ORIENTATION OF EACH PLY IS DESIGNATED BY A NUMBER (IN DEGREES) REPRESENTING THE ORIENTATION OF THE AXIS PARALLEL TO THE DIRECTION OF FILAMENTS (IN TAPE) OR LONGITUDINALLY ORIENTED YARN (IN A WOVEN FABRIC) WITH RESPECT TO A REFERENCED AXIS. 0 DEGREES IS THE REFERENCE AXIS. THE DIRECTION OF LONGITUDINAL YARN IN A WOVEN FABRIC IS CALLED THE WARP DIRECTION

[B] FOR CUMLINE NO: 267, 268, 270, 274 THRU 999

[C] FOR CUMLINE NO: 1 THRU 226, 269, 271 THRU 273

[D] CORE RIBBON DIRECTION TYPICAL [B][C]

[E] MATERIAL AND PLY ORIENTATION SHOWN FOR FIELD AREAS ONLY. SEE BOEING DRAWINGS FOR EDGE BANDS AND AREAS WITH DOUBLERS

[F] CORE RIBBON DIRECTION TYPICAL [M][L]

[G] FOR CUMLINE NO: 1000, 1002, 1004 THRU 1011, 1013 THRU 1024, 1026 THRU 1035, 1038 THRU 1041, 1044 THRU 1579

[H] FOR CUMLINE NO: 1581 THRU 1585

[I] MOISTURE BARRIER PLY

[J] 250°F (121°C) CURE AT MANUFACTURE

[K] PREPREG NONWOVEN KEVLAR MAT PER BMS 8-310

[L] FOR CUMLINE NO: 1000, 1002, 1004 THRU 1011, 1013 THRU 1024, 1026 THRU 1035, 1038 THRU 1041, 1044 THRU 1347

[M] FOR CUMLINE NO: 1361 THRU 1585

[N] PREPREG GLASS FABRIC PER BMS 8-79, CLASS III, GRADE 1, TYPE 1581

[O] PREPREG GLASS FABRIC PER BMS 8-79, CLASS III, GRADE 1, TYPE 120

[P] PREPREG ARAMID FABRIC PER BMS 8-219, STYLE 285 [J]

[Q] PREPREG GRAPHITE TAPE PER BMS 8-168, CLASS 1, TYPE II, GRADE 145

[R] PREPREG ARAMID FABRIC PER BMS 8-219, STYLE 120 [J]

Horizontal Stabilizer Skin Identification
(Metal Stabilizer)
Figure 1 (Sheet 1)

NOTES (Cont)

[S] THIS PLY IS IN THE FIELD AREA FROM STA 195.00 THRU STA 213.32

[T] THIS PLY IS IN THE FIELD AREA FROM STA 39.02 THRU STA 66.54

[U] THIS PLY IS IN THE FIELD AREA FROM STA 66.54 THRU STA 94.07

[V] THIS PLY IS IN THE FIELD AREA FROM STA 94.07 THRU STA 121.59

[W] THIS PLY IS IN THE FIELD AREA FROM STA 121.59 THRU STA 149.12

[X] THIS PLY IS IN THE FIELD AREA FROM STA 149.12 THRU STA 176.64

[Y] THIS PLY IS IN THE FIELD AREA FROM STA 176.64 THRU STA 195.00

[Z] FOR CUMLINE NO: 1 THRU 103

[AA] FOR CUMLINE NUMBERS:
104 THRU 1002, 1004 THRU 1011,
1013 THRU 1024, 1026 THRU 1035,
1038 THRU 1041, 1044 THRU 1585

[AB] FOR CUMLINE NUMBERS:
1 THRU 32

[AC] FOR AIRPLANES WITH METAL STABILIZERS AND NOT IN [AB]

Horizontal Stabilizer Skin Identification
(Metal Stabilizer)
Figure 1 (Sheet 2)

REF DWG
65-73794

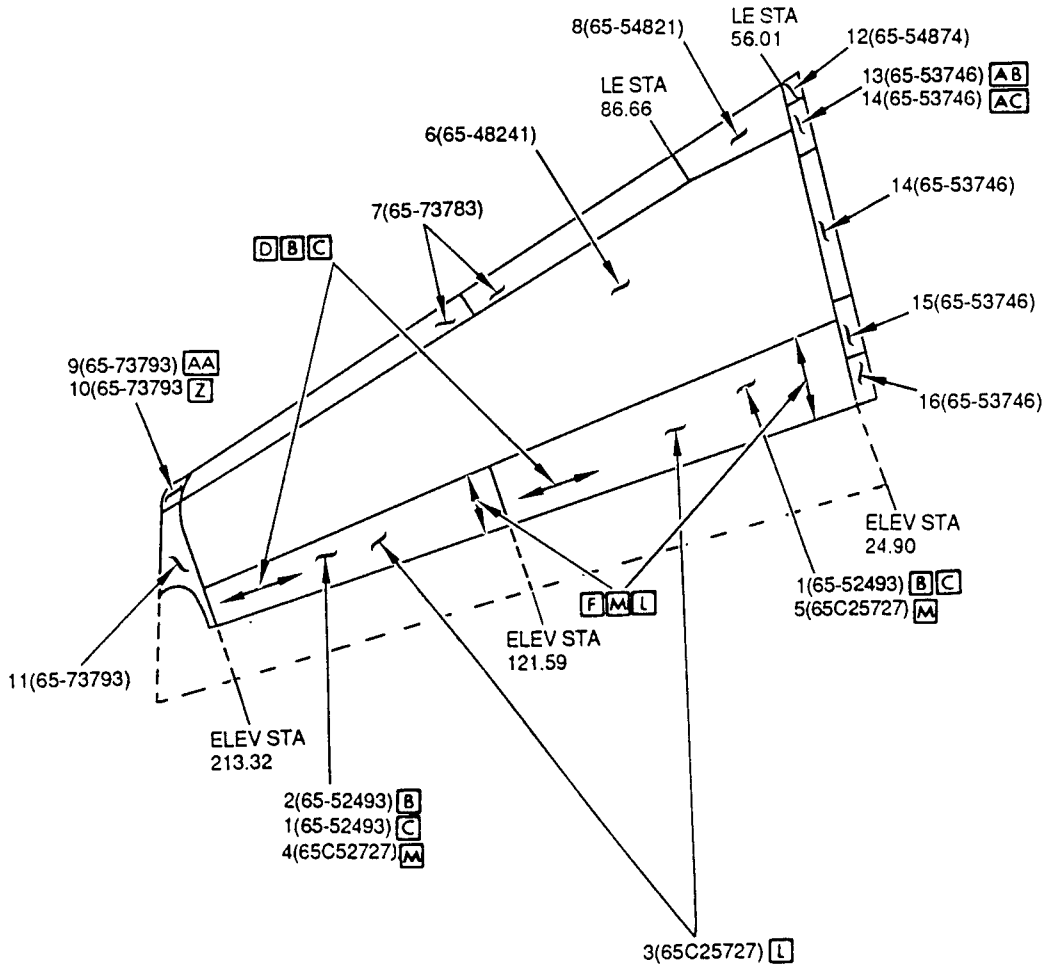


UPPER SURFACE
DETAIL I

Horizontal Stabilizer Skin Identification
(Metal Stabilizer)
Figure 1 (Sheet 3)

| ITEM | DESCRIPTION | GAGE | MATERIAL | EFFECTIVITY |
|---|---|---|---|---|
| 1 | TE PANEL-UPPER<br>SKIN<br>CORE | | GLASS/EPOXY/HONEYCOMB SANDWICH<br>PREPREG FIBERGLASS<br>NON-METALLIC HONEYCOMB PER BMS8-124, CLASS I, TYPE I, GRADE 4 | |
| 2 | TE PANEL-UPPER<br>SKIN<br>CORE | | GLASS/EPOXY/HONEYCOMB SANDWICH<br>PREPREG FIBERGLASS<br>BMS8-124, CLASS IV, TYPE V, GRADE 3 | |
| 3 | TE PANEL-UPPER<br>SKIN<br>CORE | | ARAMID/GRAPHITE/EPOXY HONEYCOMB SANDWICH<br>SEE DETAIL III<br>NON-METALLIC HONEYCOMB PER BMS8-124, CLASS IV, TYPE V, GRADE 3 | |
| 4 | TE PANEL-UPPER<br>SKIN<br>CORE | | GLASS/GRAPHITE/EPOXY HONEYCOMB SANDWICH<br>SEE DETAIL V<br>NON-METALLIC HONEYCOMB PER BMS8-124, CLASS IV, TYPE V, GRADE 3 | |
| 5 | TE PANEL-UPPER<br>SKIN<br>CORE | | GLASS/GRAPHITE/EPOXY HONEYCOMB SANDWICH<br>SEE DETAIL IV<br>NON-METALLIC HONEYCOMB PER BMS8-124, CLASS IV, TYPE V, GRADE 3 | |
| 6 | INTERSPAR SKIN ASSY-UPPER<br>SKIN<br>DOUBLER-WAFFLE<br>DOUBLER-FWD<br>DOUBLER-AFT | <br>0.040<br>0.010<br>0.010<br>0.020 | <br>CLAD 2024-T3<br>CLAD 2024-T3<br>CLAD 2024-T3<br>CLAD 2024-T3 | |
| 7 | REMOVABLE LE SKIN PANEL ASSY<br>SKIN<br>DOUBLER | <br>0.040<br>0.063 | <br>CLAD 2024-T3<br>CLAD 2024-T3 | |
| 8 | FIXED LE EDGE PANEL SKIN ASSY<br>SKIN<br>DOUBLER | <br>0.040<br>0.063 | <br>CLAD 2024-T3<br>CLAD 2024-T3 | |
| 9 | SKIN | 0.090 | CLAD 2024-T42 | |
| 10 | TIP LE ASSY<br>SKIN<br>DOUBLER | <br>0.040<br>0.040 | <br>CLAD 2024-T42<br>CLAD 2024-T42 | |
| 11 | TIP | | PLASTIC GLASS FABRIC REINFORCEMENT PER BMS8-79, CLASS I, TYPE 1 | |
| 12 | PANEL ASSY<br>SKIN<br>DOUBLER | <br>0.050<br>0.050 | <br>CLAD 2024-T42<br>CLAD 2024-T42 | |
| 13 | SKIN<br>DOUBLER | 0.063<br>0.040 | CLAD 2024-T3<br>CLAD 2024-T42 | |
| 14 | SKIN<br>DOUBLER | 0.040<br>0.032 | CLAD 2024-T3<br>CLAD 2024-T42 | |
| 15 | SKIN | 0.100 | CLAD 2024-T42 | |
| 16 | SKIN TE UPPER<br>DOUBLER | 0.063<br>0.040 | CLAD 2024-T42<br>CLAD 2024-T42 | |

LIST OF MATERIALS FOR DETAIL I

Horizontal Stabilizer Skin Identification
(Metal Stabilizer)
Figure 1 (Sheet 4)

REF DWG
65-73794

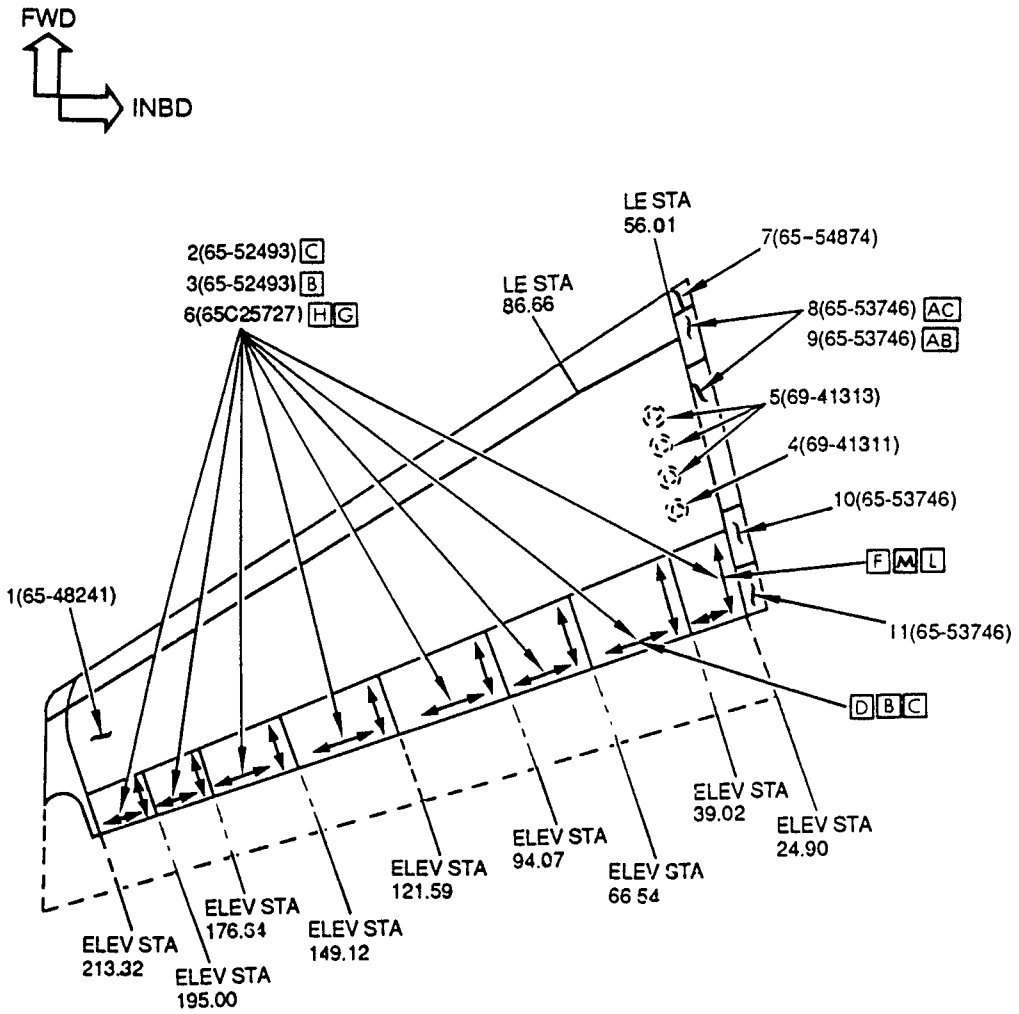


LOWER SURFACE
DETAIL II

Horizontal Stabilizer Skin Identification
(Metal Stabilizer)
Figure 1 (Sheet 5)

| ITEM | DESCRIPTION | GAGE | MATERIAL | EFFECTIVITY |
|---|---|---|---|---|
| 1 | INTERSPAR SKIN ASSY- | | | |
| | SKIN | 0.040 | CLAD 2024-T3 | |
| | DOUBLER-WAFFLE | 0.010 | CLAD 2024-T3 | |
| | DOUBLER-FWD | 0.010 | CLAD 2024-T3 | |
| | DOUBLER-AFT | 0.020 | CLAD 2024-T3 | |
| 2 | TE PANEL-LOWER | | GLASS/EPOXY/HONEYCOMB SANDWICH | |
| | SKIN | | PREPREG FIBERGLASS | |
| | CORE | | NON-METALLIC HONEYCOMB PER BMS8-124, CLASS 1, TYPE 1, GRADE 4 | |
| 3 | TE PANEL-UPPER | | GLASS/EPOXY/HONEYCOMB SANDWICH | |
| | SKIN | | PREPREG FIBERGLASS | |
| | CORE | | NON-METALLIC HONEYCOMB PER BMS8-124, CLASS 4, TYPE 5 | |
| 4 | ACCESS DOOR | | | |
| | DOOR | 0.070 | CLAD 2024-T3 | |
| | DOUBLER | 0.100 | CLAD 2024-T3 | |
| 5 | ACCESS DOOR | | | |
| | DOOR | 0.050 | CLAD 2024-T3 | |
| | DOUBLER | 0.100 | CLAD 2024-T3 | |
| 6 | TE PANEL-LOWER | | ARAMID/GRAPHITE/EPOXY HONEYCOMB SANDWICH | |
| | SKIN | | SEE DETAIL III | |
| | CORE | | NON-METALLIC HONEYCOMB PER BMS8-124, CLASS IV, TYPE V, GRADE 3 | |
| 7 | PANEL ASSY | | | |
| | SKIN | 0.050 | CLAD 2024-T42 | |
| | DOUBLER | 0.050 | CLAD 2024-T42 | |
| 8 | SKIN | 0.040 | CLAD 2024-T3 | |
| | DOUBLER | 0.032 | CLAD 2024-T42 | |
| 9 | SKIN | 0.063 | CLAD 2024-T3 | |
| | DOUBLER | 0.040 | CLAD 2024-T42 | |
| 10 | SKIN | 0.100 | CLAD 2024-T42 | |
| 11 | SKIN | 0.063 | CLAD 2024-T42 | |
| | DOUBLER | 0.040 | CLAD 2024-T42 | |

LIST OF MATERIALS FOR DETAIL II

Horizontal Stabilizer Skin Identification
(Metal Stabilizer)
Figure 1 (Sheet 6)

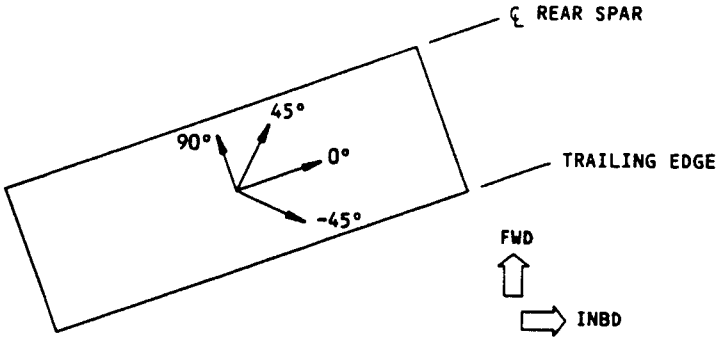


VIEW ON PANELS [A]

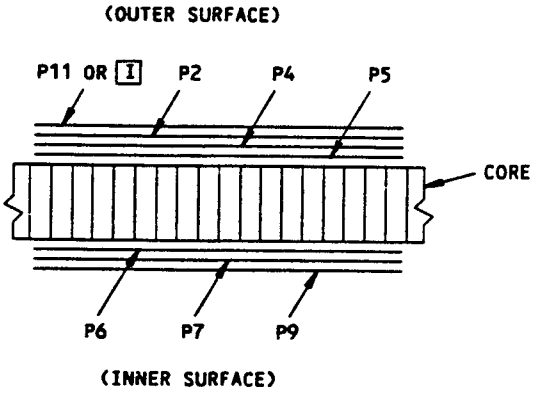


SECTION THRU HONEYCOMB
PANEL BETWEEN ELEVATOR STA 23.10-39.02

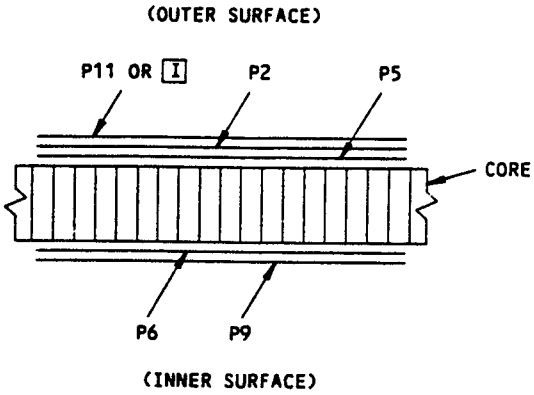


SECTION THRU HONEYCOMB PANEL
BETWEEN ELEVATOR STA 39.02-213.32

| ITEM NO. | PLY NO. | MATERIAL | PLY [A] ORIENTATION |
|---|---|---|---|
| 6 (DETAIL II) | 2 | [P] | +45° OR -45° |
| | 4,7 | [Q] | 0° |
| 3 (DETAIL I) | 5,6 | [Q] | 90° |
| | 9 | [R] | +45° OR -45° |
| 6 (DETAIL II) | P11 [H] | [O] | 0° OR 90° |
| | [I] [G] | [K] | --------- |

PLY TABLE [E]

DETAIL III

Horizontal Stabilizer Skin Identification
(Metal Stabilizer)
Figure 1 (Sheet 7)

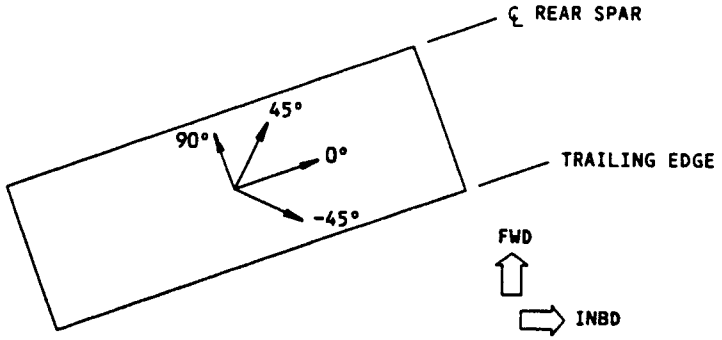


VIEW ON PANELS [A]
(OUTER SURFACE) FROM STA 23.10 THRU STA 213.32

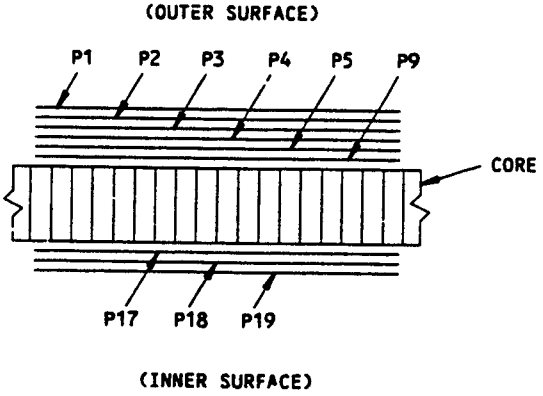


SECTION THRU HONEYCOMB
PANEL BETWEEN ELEVATOR STA 23.10-39.02

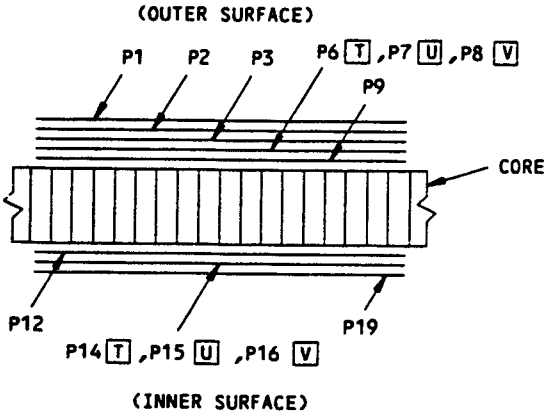


SECTION THRU HONEYCOMB
PANEL BETWEEN STA 39.02-121.59

| ITEM NO. | PLY NO. | MATERIAL | PLY [A] ORIENTATION |
|---|---|---|---|
| 5 (DETAIL I) | 1 | [N] | +45° OR -45° |
| | 12,2,17,3,9 | [N] | 0° OR 90° |
| | 4,18 | [Q] | 0° |
| | 19 | [O] | +45° OR -45° |
| | 5,6,7,8,14,15, 16 | [Q] | 90° |

PLY TABLE FOR PANEL FROM STA 23.10 THRU STA 121.59 [E]

DETAIL IV

Horizontal Stabilizer Skin Identification
(Metal Stabilizer)
Figure 1 (Sheet 8)

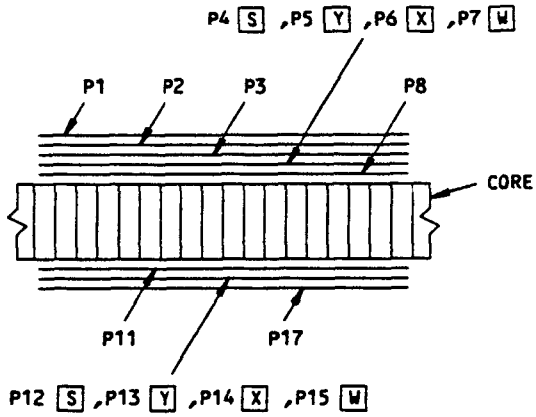


SECTION THRU HONEYCOMB [A]
PANEL BETWEEN STATION 121.59 THRU 213.32

| ITEM NO. | PLY NO. | MATERIAL | PLY [A] ORIENTATION |
|---|---|---|---|
| 4 (DETAIL I) | 1,17 | [N] | +45° OR -45° |
| | 4,5,6,7,12,13, 14,15 | [Q] | 90° |
| | 2,3,11 | [N] | 0° OR 90° |

PLY TABLE FOR PANEL FROM STA 121.59 THRU STA 213.32 [E]

DETAIL V

Horizontal Stabilizer Skin Identification
(Metal Stabilizer)
Figure 1 (Sheet 9)

| ITEM | UPPER CHORD | | WEB OR FORMED SECTION | | LOWER CHORD | |
|---|---|---|---|---|---|---|
| | MATERIAL | REPAIR FIG. NO. | MATERIAL | REPAIR FIG. NO. | MATERIAL | REPAIR FIG. NO. |
| 1 | | | 0.063 CLAD 2024-T3 | | | |
| 2 | | | 0.050 CLAD 2024-T42 | | | |
| 3 | BAC1503-1430 2024-T42 | | 0.010 + 0.010 CLAD 2024-T3 | | BAC1503-100235 2024-T4 | |
| 4 | BAC1505-100583 7075-T6 | | 0.032 CLAD 2024-T3 | | BAC1505-100583 7075-T6 | |
| 5 | BAC1505-100556 7075-T6 | 55-10-4 FIG. 1, 2 | 0.010 + 0.010 CLAD 2024-T3 BONDED | 55-10-3 FIG. 7, 8 | BAC1505-100556 7075-T6 | 55-10-4 FIG. 1, 2 |
| 6 | BAC1505-100557 7075-T6 | 55-20-4 FIG. 1, 2 | 0.016 + 0.016 CLAD 2024-T3 | 55-1-3 FIG. 8 | BAC1505-100557 7075-T6 | 55-10-4 FIG. 1, 2 |
| 7 | BAC1503-8893 7075-T6 | | 0.025 + 0.025 CLAD 2024-T3 BONDED | | BAC1503-8893 7075-T6 | |
| 8 | BAC1506-1763 7075-T6511 | 55-10-5 FIG. 1 | 0.040 CLAD 7075-T6 | 55-10-5 FIG. 2 | BAC1506-1764 7075-T6511 | 55-10-5 FIG. 1 |
| 9 | BAC1506-1766 2024-T3511 | | 0.180 CLAD 7075-T6 | | BAC1506-1767 7075-T6511 | |
| 10 | | | | | BAC1506-1767 7075-T6511 | 55-10-5 FIG. 1 |
| 11 | BAC1505-100593 7075-T6 | | 0.020 CLAD 2024-T3 | | BAC1505-100593 7075-T6 | |
| 12 | | | 7075-T3 MACHINED FORGING | | | |
| 13 | BAC1505-100592 7075-T6 | | ALUM HONEYCOMB | | BAC1505-100592 7075-T6 | |
| 14 | | | BAC1505-18884 7075-T6511 | | | |

Horizontal Stabilizer Structure Identification
(Metal Stabilizer)
Figure 2 (Sheet 1)

| ITEM | UPPER CHORD | | WEB OR FORMED SECTION | | LOWER CHORD | |
|---|---|---|---|---|---|---|
| | MATERIAL | REPAIR FIG. NO. | MATERIAL | REPAIR FIG. NO. | MATERIAL | REPAIR FIG. NO. |
| 15 | BAC1505-100551 7075-T6 | | ALUM HONEYCOMB | | BAC1505-100551 7075-T6 | |
| 16 | | | MACHINED FROM 0.18 7075-T6 | | | |
| 17 | | | 0.016 + 0.016 CLAD 7075-T6 | 55-10-5 FIG. 3 | | |
| 18 | | | 0.010 + 0.010 CLAD 7075-T6 | 55-10-5 FIG. 3 | | |
| 19 | BAC1506-1766 2024-T3511 (UPPER CHORD) BAC1520-1367 7075-T6511 (FAIL SAFE CHORD) | 55-10-5 FIG. 1 | | | | |
| 20 | BAC1503-100195 2024-T42 | | 0.050 CLAD 2024-T3 | | BAC1514-1720 2024-T42 | |
| 21 | BAC1503-100242 2024-T42 | | 0.010 + 0.010 CLAD 2024-T3 | | BAC1503-100242 2024-T42 | |
| 22 | BAC1505-100578 2024-T42 | | 0.010 + 0.010 CLAD 2024-T3 | | BAC1505-100578 2024-T42 | |
| 23 | 0.050 CLAD 2024-T4 | | | | 0.050 CLAD 2024-T4 | |
| 24 | 0.040 CLAD 2024-T4 | | | | 0.040 CLAD 2024-T4 | |
| 25 | 0.063 CLAD 2024-T42 | | | | 0.063 CLAD 2024-T42 | |
| 26 | BAC1506-1763 7075-T6511 | | 0.012 + 0.012 BONDED 7075-T6 CLAD | | BAC1506-1764 7075-T6511 | |
| 27 | BAC1506-1763 7075-T6511 | | 0.050 CLAD 7075-T6 | | BAC1506-1764 7075-T6511 | |

Horizontal Stabilizer Structure Identification
(Metal Stabilizer)
Figure 2 (Sheet 2)

| ITEM | UPPER CHORD | | WEB OR FORMED SECTION | | LOWER CHORD | |
|---|---|---|---|---|---|---|
| | MATERIAL | REPAIR FIG. NO. | MATERIAL | REPAIR FIG. NO. | MATERIAL | REPAIR FIG. NO. |
| 28 | BAC1506-1580<br>7075-T6 | | 0.010 + 0.010<br>CLAD<br>7075-T6 | | BAC1506-1580<br>7075-T6511 | |
| 29 | FORGING<br>7075-T73<br>7079-T6 | | | | | |
| 30 | BAC1505-100564<br>7075-T6511 | | 0.012 + 0.020<br>CLAD<br>7075-T6 | | BAC1505-100564<br>7075-T6511 | |
| 31 | BAC1505-100564<br>7075-T6511 | | 0.063 CLAD<br>7075-T6 | | BAC1506-1804<br>7075-T6511 | |
| 32 | FORGING<br>7075-T73 | | BAC1520-1390<br>7075-T6511 | | FORGING<br>7075-T73 | |
| 33 | BAC1506-2065<br>7075-T6 | | 0.025 + 0.025<br>2024-T3 CLAD<br>BONDED | | BAC1506-2065<br>7075-T6 | |
| 34 | BAC1506-1763<br>7075-T6511 | | 0.160 CLAD<br>7075-T6 | | BAC1506-1764<br>7076-T6511 | |
| 35 | DELETED | | | | | |
| 36 | BEAM CHANNEL<br>0.040 CLAD<br>2024-T42 | | | | BEAM CHANNEL<br>0.040 CLAD<br>2024-T42 | |
| 37 | COVERPLATE<br>MACHINED FROM<br>0.250 2024-T351 | | | | COVERPLATE<br>MACHINED FROM<br>0.250 2024-T351 | |
| 38 | STRAP<br>BAC1512-2350<br>2024-T3511 | | | | STRAP<br>BAC1512-2350<br>2024-T3511 | |
| 39 | FILLER BLOCK<br>PHENOLIC PAPER<br>L-P-509 TYPE 1<br>GRADE XXX | | | | FILLER BLOCK<br>PHENOLIC PAPER<br>L-P-509 TYPE 1<br>GRADE XXX | |
| 40 | | | | | LOWER CHORD<br>BAC1506-1767<br>7075-T73511 | 55-10-5<br>FIG. 1 |

Horizontal Stabilizer Structure Identification
(Metal Stabilizer)
Figure 2 (Sheet 3)

NOTES

[A] ATTACHMENT FITTING

[B] FOR CUM LINE NUMBERS:
1 THRU 22

[C] FOR CUM LINE NUMBERS:
23 AND ON

[D] FOR CUM LINE NUMBERS:
1 THRU 37, 39, 42

[E] FOR CUM LINE NUMBERS:
38, 40, 41, 43 AND ON

[F] FOR CUM LINE NUMBERS:
1 THRU 153, 157

[G] FOR CUM LINE NUMBERS:
154 THRU 156, 158 AND ON

[H] FOR CUM LINE NUMBERS:
1 THRU 32

[J] FOR CUM LINE NUMBERS:
33 AND ON

[K] FORGINGS OF 7079-T6 MATERIAL HAVE BEEN REPLACED BY FORGINGS OF 7075-T73 IN PRODUCTION; 7075-T73 FORGINGS ARE RECOMMENDED WHEN EXISTING STOCKS OF 7079-T6 ARE EXHAUSTED

[L] FOR CUM LINE NUMBERS:
1 THRU 181

[M] FOR CUM LINE NUMBERS:
182 AND ON.

[N] FOR CUM LINE NUMBERS:
1 THRU 11, 15 THRU 23.

[O] FOR CUM LINE NUMBERS:
1 THRU 675

[P] FOR CUM LINE NUMBERS:
676 AND ON

Horizontal Stabilizer Structure Identification
(Metal Stabilizer)
Figure 2 (Sheet 4)

REF DWG
65-73781

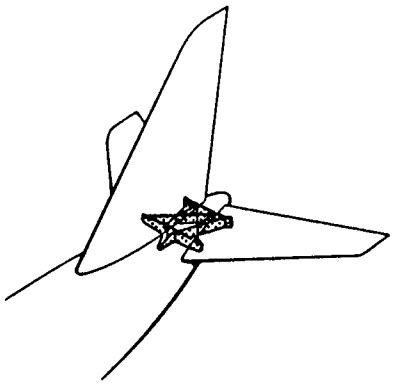

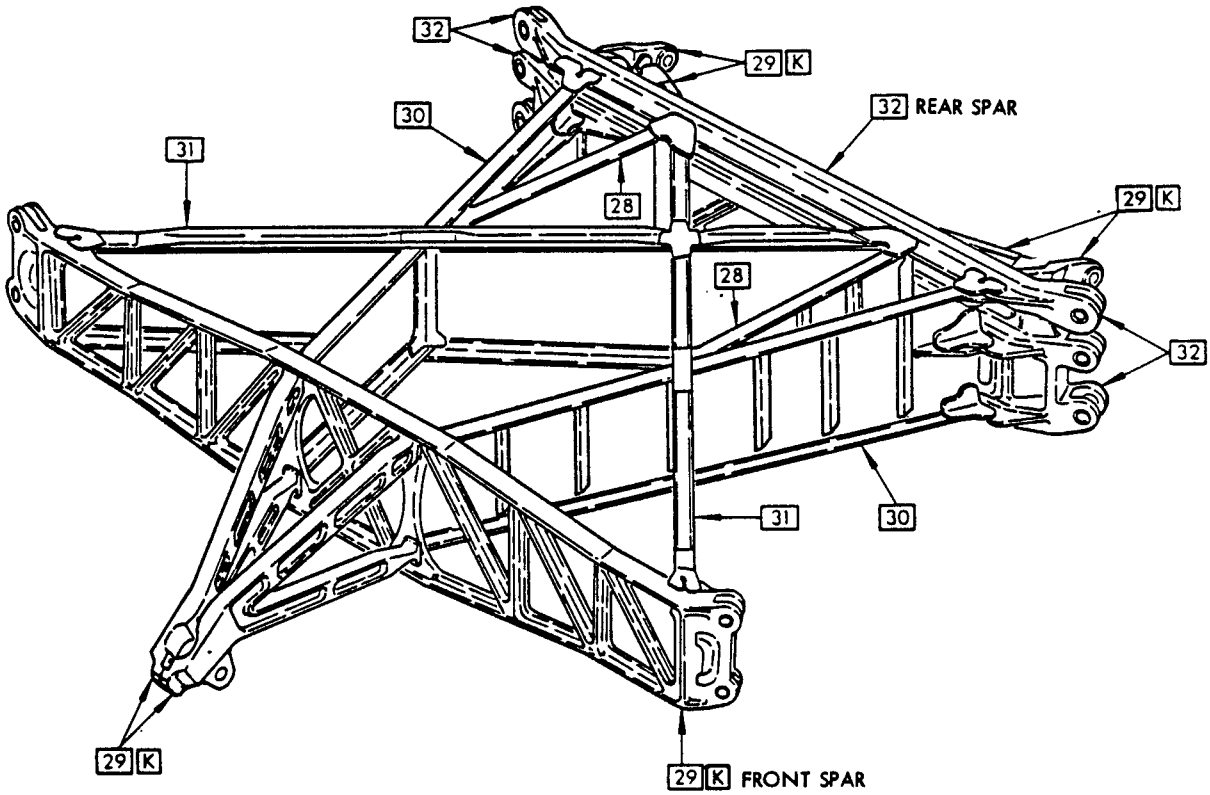


Horizontal Stabilizer Structure Identification
(Metal Stabilizer)
Figure 2 (Sheet 6)

REF DWG
65-73794

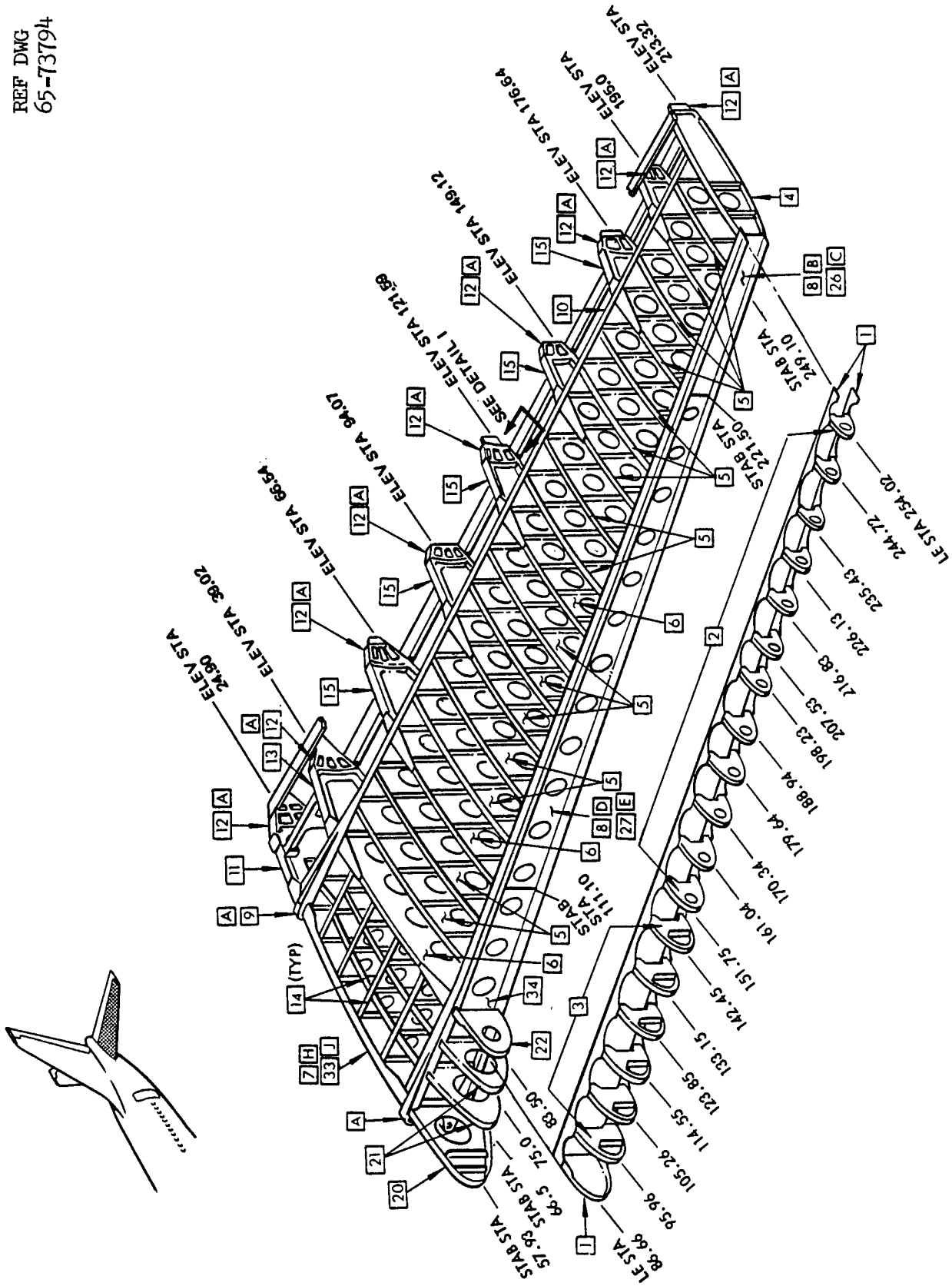


Horizontal Stabilizer Structure Identification
(Metal Stabilizer)
Figure 2 (Sheet 7)

REF DWG
65-73794
65-48242

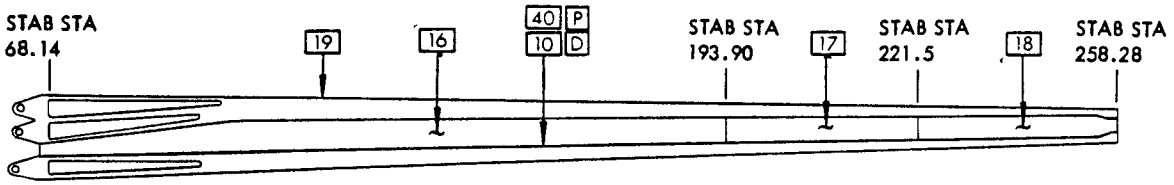


REAR VIEW – REAR SPAR

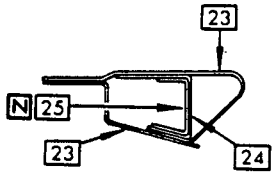


TRAILING EDGE BEAM – UPPER AND LOWER L
DETAIL I

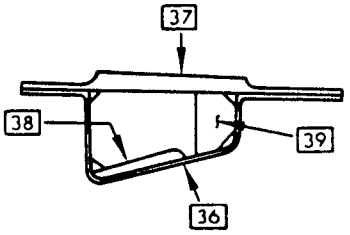


TRAILING EDGE BEAM – UPPER AND LOWER M
DETAIL I

Horizontal Stabilizer Structure Identification
(Metal Stabilizer)
Figure 2 (Sheet 8)

REF DWG
65C17875

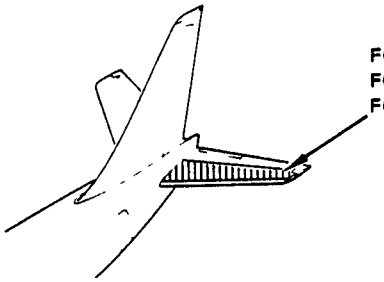

FOR UPPER SURFACE SEE DETAIL I.
FOR LOWER SURFACE SEE DETAIL II.
FOR STRUCTURE SEE FIGURE 4.

NOTES

[A] PLY ORIENTATION CONVENTION: FABRIC - 0 DEGREE IS PARALLEL TO THE WARP DIRECTION. TAPE - 0 DEGREE IS PARALLEL TO THE FIBER DIRECTION

[B] EPOXY IMPREGNATED FIBERGLASS FABRIC PER BMS 8-139 TYPE 120

[C] EPOXY IMPREGNATED GRAPHITE WOVEN FABRIC PER BMS 8-212, TYPE II, CLASS 2, STYLE 3K-70-P

[D] EPOXY IMPREGNATED GRAPHITE UNIDIRECTIONAL TAPE PER BMS 8-212, TYPE II, CLASS 1, GRADE 95

[E] EPOXY IMPREGNATED GRAPHITE UNIDIRECTIONAL TAPE PER BMS 8-212, TYPE II, CLASS 1, GRADE 190

[F] EPOXY IMPREGNATED GRAPHITE UNIDIRECTIONAL TAPE PER BMS 8-212, TYPE II, CLASS 1, GRADE 145

[G] MATERIALS AND PLY ORIENTATION SHOWN FOR FIELD AREAS ONLY. SEE BOEING DRAWINGS FOR EDGE BANDS AND AREAS WITH DOUBLERS

[H] FOR CUM LINE NUMBERS: 1003, 1012 (PZ951-PZ953)

[J] FOR CUM LINE NUMBERS: 1025, 1036, 1042 (PZ954-PZ960)

[K] 65C17821 - TRAILING EDGE PANELS, SIMILAR TO 65-52493 (55-10-2, FIG. 1). SEE 51-40-9

[L] 65C17838 - TIP INSTALLATION, SIMILAR TO 65-73793 (55-10-2, FIG. 1). SEE 51-40-9

[M] 65C17844 - REMOVABLE LEADING EDGE INSTALLATION, SIMILAR TO 65-73783 (55-10-2, FIG. 1)

[N] 65C17845 - FIXED LEADING EDGE INSTALLATION, SIMILAR TO 65-54821 (55-10-2, FIG. 1)

Graphite Composite Horizontal Stabilizer Skin Identification
(Integral Skin/Stringer Panels)
Figure 3 (Sheet 1)

REF DWG
65C17850

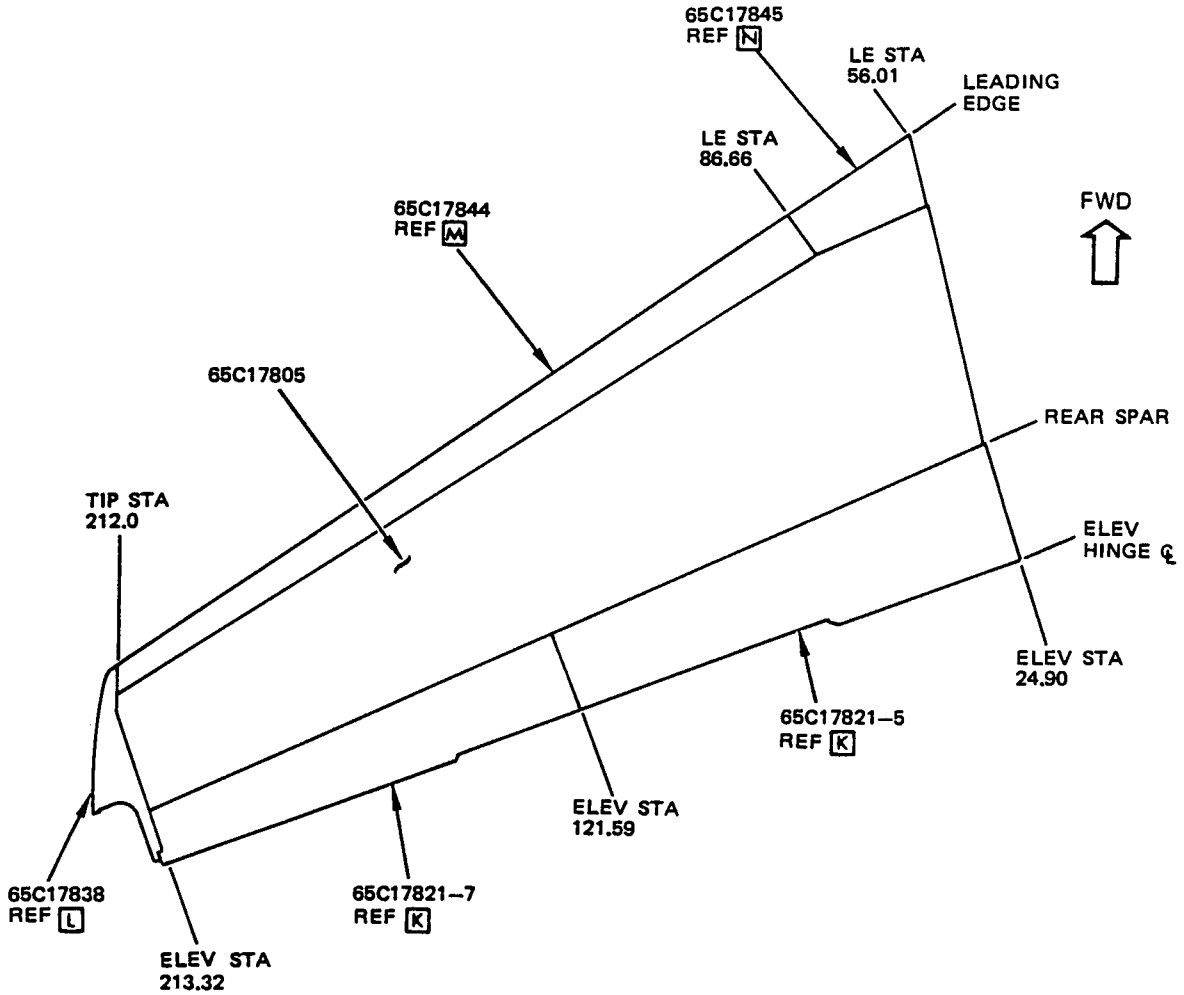


DETAIL I

| ITEM | DESCRIPTION | GAGE | MATERIAL | EFFECTIVITY |
|---|---|---|---|---|
| 1 | SKIN LAYUP | | GRAPHITE EPOXY LAMINATE (SEE DETAIL III) | |

LIST OF MATERIALS FOR DETAIL I

Graphite Composite Horizontal Stabilizer Skin Identification
(Integral Skin/Stringer Panels)
Figure 3 (Sheet 2)

REF DWG
65V17805

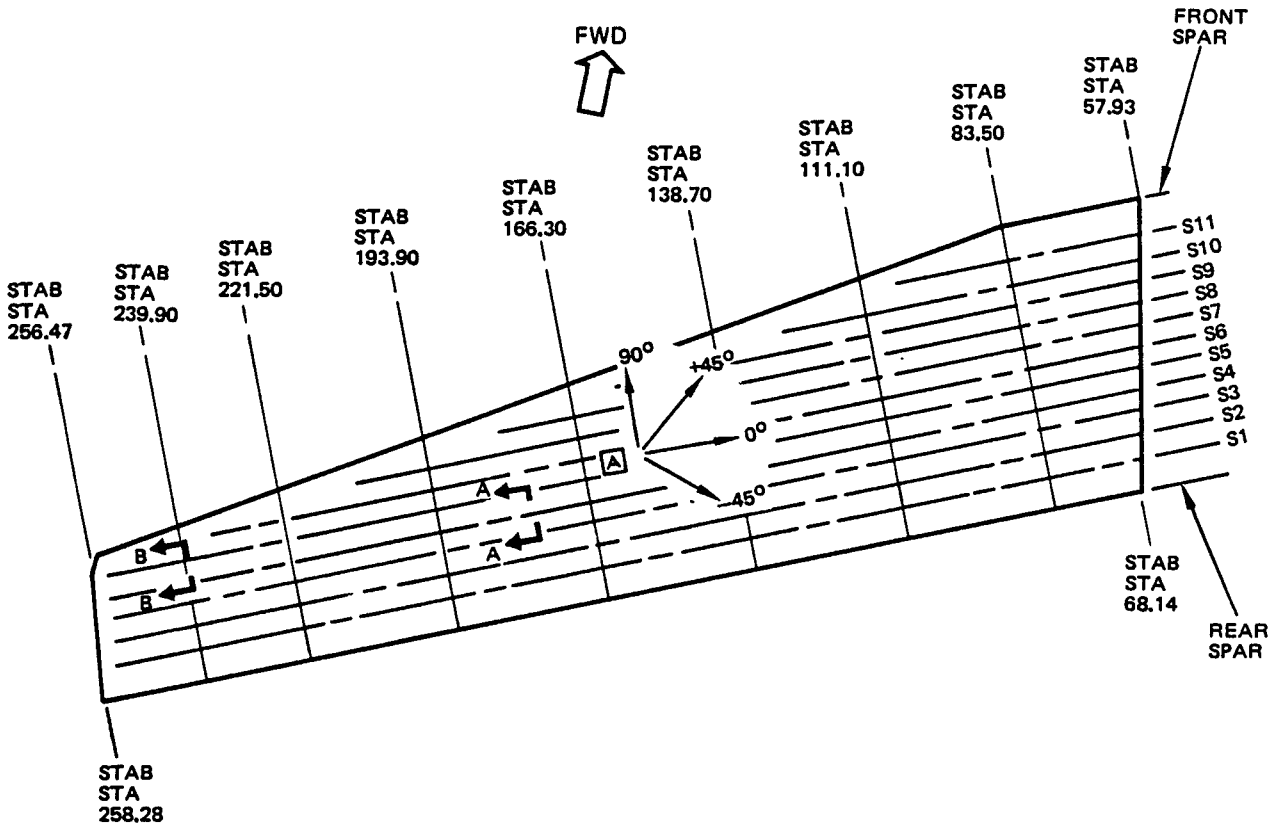


UPPER INTEGRAL SKIN/STRINGER BONDED ASSEMBLY

DETAIL III

Graphite Composite Horizontal Stabilizer Skin Identification
(Integral Skin/Stringer Panels)
Figure 3 (Sheet 3)

REF DWG
65C17805

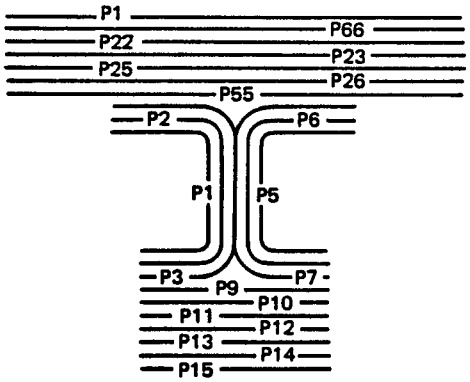


SECTION A–A

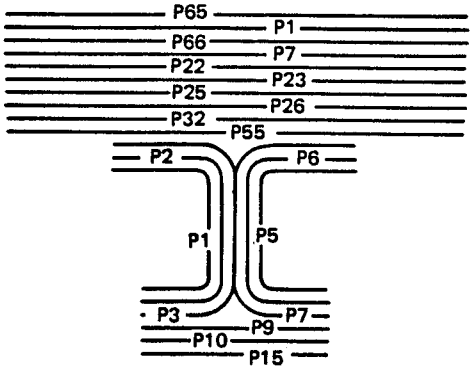


SECTION B–B

| ITEM | PLY NO. | MATERIAL | PLY [A] ORIENTATION | EFFECTIVITY | |
|---|---|---|---|---|---|
| 1 SKIN | P65 | [B] | ±45° | [H] | [J] |
| | P1 | [C] | +45° | [H] | |
| | P1 | [D] | +45° | [J] | |
| | P66 | [D] | –45° | [J] | |
| | P7 | [E] | 90° | [H] | [J] |
| | P22 | [C] | 0° | ↓ | ↓ |
| | P23 | ↓ | –45° | ↓ | ↓ |
| | P25 | ↓ | –45° | ↓ | ↓ |
| | P26 | ↓ | 0° | ↓ | ↓ |
| | P32 | [E] | 90° | ↓ | ↓ |
| | P55 | [C] | +45° | ↓ | ↓ |
| 1 STRINGER | P1 | [C] | ±45° | [H] | [J] |
| | P3 | ↓ | ↓ | ↓ | ↓ |
| | P5 | ↓ | ↓ | ↓ | ↓ |
| | P7 | ↓ | ↓ | ↓ | ↓ |
| | P15 | ↓ | ↓ | ↓ | ↓ |
| | P2 | ↓ | 0° | ↓ | ↓ |
| | P6 | ↓ | ↓ | ↓ | ↓ |
| | P9 | [F] | ↓ | ↓ | ↓ |
| | P10 | ↓ | ↓ | ↓ | ↓ |
| | P11 | ↓ | ↓ | ↓ | ↓ |
| | P12 | ↓ | ↓ | ↓ | ↓ |
| | P13 | ↓ | ↓ | ↓ | ↓ |
| | P14 | ↓ | ↓ | ↓ | ↓ |

PLY TABLE FOR DETAIL III [G]

Graphite Composite Horizontal Stabilizer Skin Identification
(Integral Skin/Stringer Panels)
Figure 3 (Sheet 4)

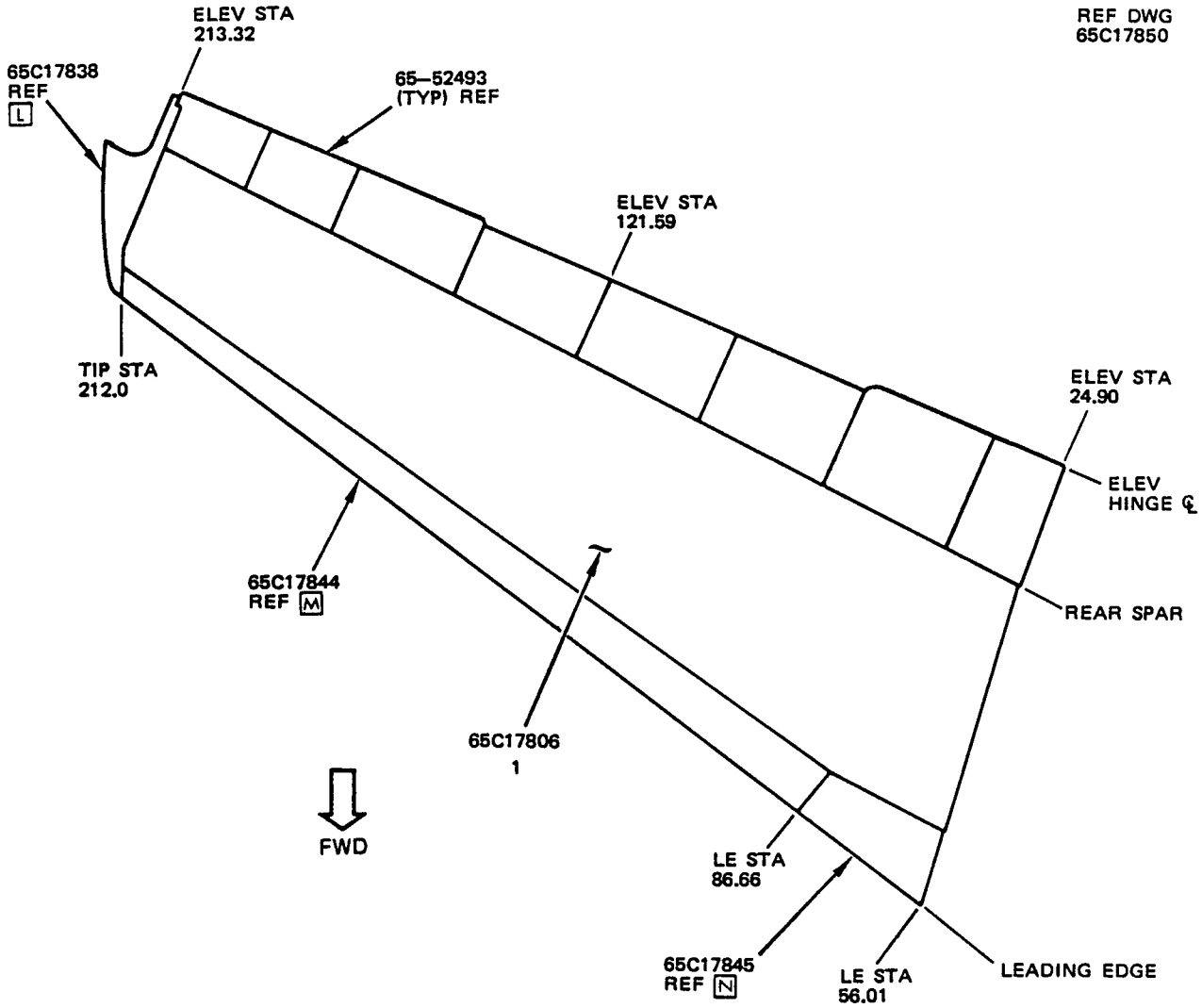


DETAIL II

| ITEM | DESCRIPTION | GAGE | MATERIAL | EFFECTIVITY |
|---|---|---|---|---|
| 1 | SKIN – LAYUP | | GRAPHITE EPOXY LAMINATE (SEE DETAIL IV) | |

LIST OF MATERIALS FOR DETAIL II

Graphite Composite Horizontal Stabilizer Skin Identification
(Integral Skin/Stringer Panels)
Figure 3 (Sheet 5)

REF DWG
65C17806

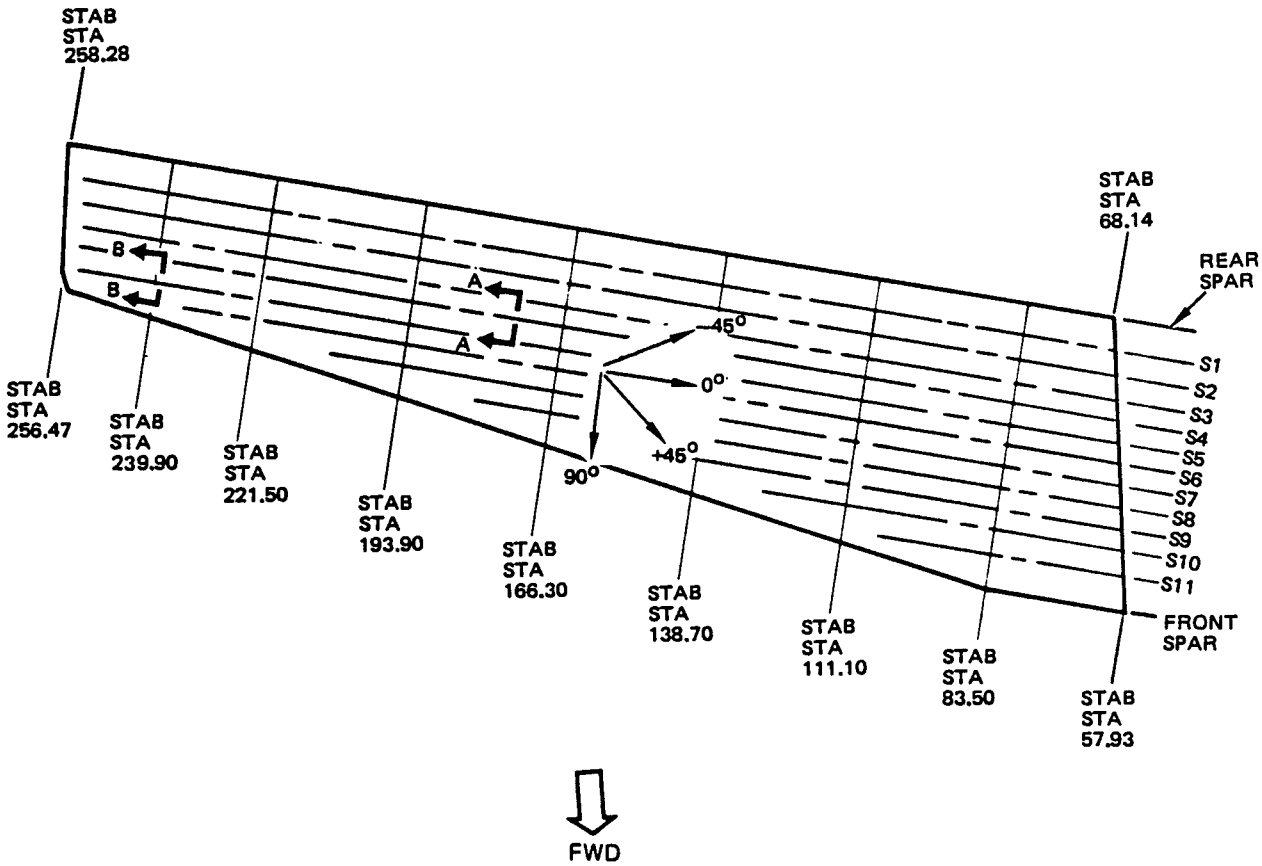


LOWER INTEGRAL SKIN/STRINGER BONDED ASSEMBLY

DETAIL IV

Graphite Composite Horizontal Stabilizer Skin Identification
(Integral Skin/Stringer Panels)
Figure 3 (Sheet 6)

REF DWG 65C17806

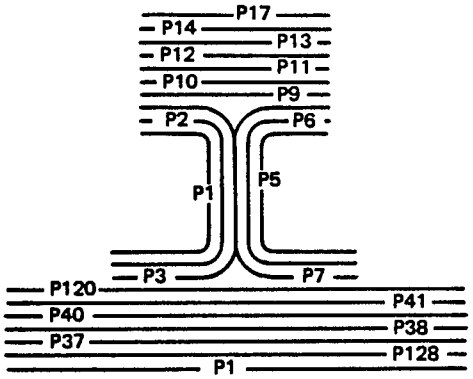


SECTION A–A

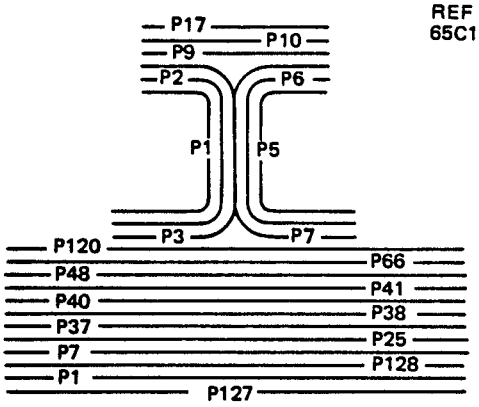


SECTION B–B

| ITEM | PLY NO. | MATERIAL | PLY [A] ORIENTATION | EFFECTIVITY | |
|---|---|---|---|---|---|
| 1 SKIN | P127 | [B] | ±45° | [H] | [J] |
| | P1 | [C] | +45° | [H] | |
| | P1 | [D] | +45° | [J] | |
| | P128 | [D] | −45° | [J] | |
| | P7 | [E] | 90° | [H] | [J] |
| | P25 | [F] | 90° | | |
| | P37 | [C] | 0° | | |
| | P38 | | −45° | | |
| | P40 | | −45° | | |
| | P41 | | 0° | | |
| | P48 | [F] | 90° | | |
| | P66 | [E] | 90° | | |
| | P120 | [C] | +45° | | |
| 1 STRINGER | P1 | [C] | ±45° | [H] | [J] |
| | P3 | | | | |
| | P5 | | | | |
| | P7 | | | | |
| | P17 | | | | |
| | P2 | | 0° | | |
| | P6 | | | | |
| | P9 | [F] | | | |
| | P10 | | | | |
| | P11 | | | | |
| | P12 | | | | |
| | P13 | | | | |
| | P14 | | | | |

PLY TABLE FOR DETAIL IV [G]

Graphite Composite Horizontal Stabilizer Skin Identification
(Integral Skin/Stringer Panels)
Figure 3 (Sheet 7)

REF DWG
65C17850

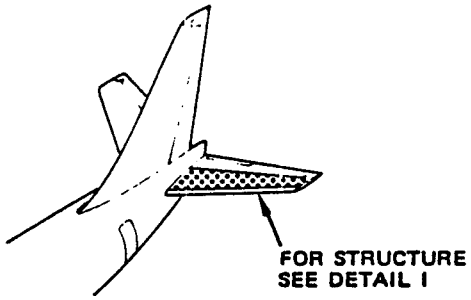


NOTES

[A] PLY ORIENTATION CONVENTION: FABRIC - 0 DEGREE IS PARALLEL TO THE WARP DIRECTION. TAPE - 0 DEGREE IS PARALLEL TO THE FIBER DIRECTION

[B] EPOXY IMPREGNATED FIBERGLASS FABRIC PER BMS 8-139 TYPE 120

[C] EPOXY IMPREGNATED GRAPHITE WOVEN FABRIC PER BMS 8-212, TYPE II, CLASS 2, STYLE 3K-70-P

[D] EPOXY IMPREGNATED GRAPHITE UNIDIRECTIONAL TAPE PER BMS 8-212, TYPE II, CLASS 1, GRADE 95

[E] EPOXY IMPREGNATED GRAPHITE UNIDIRECTIONAL TAPE PER BMS 8-212, TYPE II, CLASS 1, GRADE 190

[F] EPOXY IMPREGNATED GRAPHITE UNIDIRECTIONAL TAPE PER BMS 8-212, TYPE II, CLASS 1, GRADE 145

[G] MATERIALS AND PLY ORIENTATION SHOWN FOR FIELD AREAS ONLY. SEE BOEING DRAWINGS FOR EDGE BANDS AND AREAS WITH DOUBLERS

[H] FOR CUM LINE NUMBERS: 1003, 1012, 1025, 1036, 1042 (PZ951-PZ960)

[J] FOR CUM LINE NUMBERS: 1003 (PZ951-PZ952)

[K] FOR CUM LINE NUMBERS: 1012, 1025, 1036, 1042 (PZ953-PZ960)

[L] FOR AIRPLANE PZ951

[M] FOR CUM LINE NUMBERS: 1003, 1012 (PZ951-PZ953)

[N] FOR CUM LINE NUMBERS: 1025, 1036, 1042 (PZ954-PZ960)

[P] FOR CUM LINE NUMBERS: 1003 (PZ952)

[R] 65C17844 - REMOVABLE LEADING EDGE INSTALLATION, SIMILAR TO 65-73783 (55-10-2, FIG. 1)

[S] 65C17845 - FIXED LEADING EDGE INSTALLATION, SIMILAR TO 65-54821 (55-10-2, FIG. 1)

Graphite Composite Horizontal Stabilizer Structure Identification
Figure 4 (Sheet 1)

REF DWGS
65C17830
65C17831
65C17840
65C17841
65C17842
65C17804
65C17810
THRU
65C17819
65C17860
65C17861

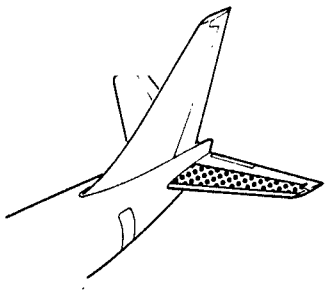

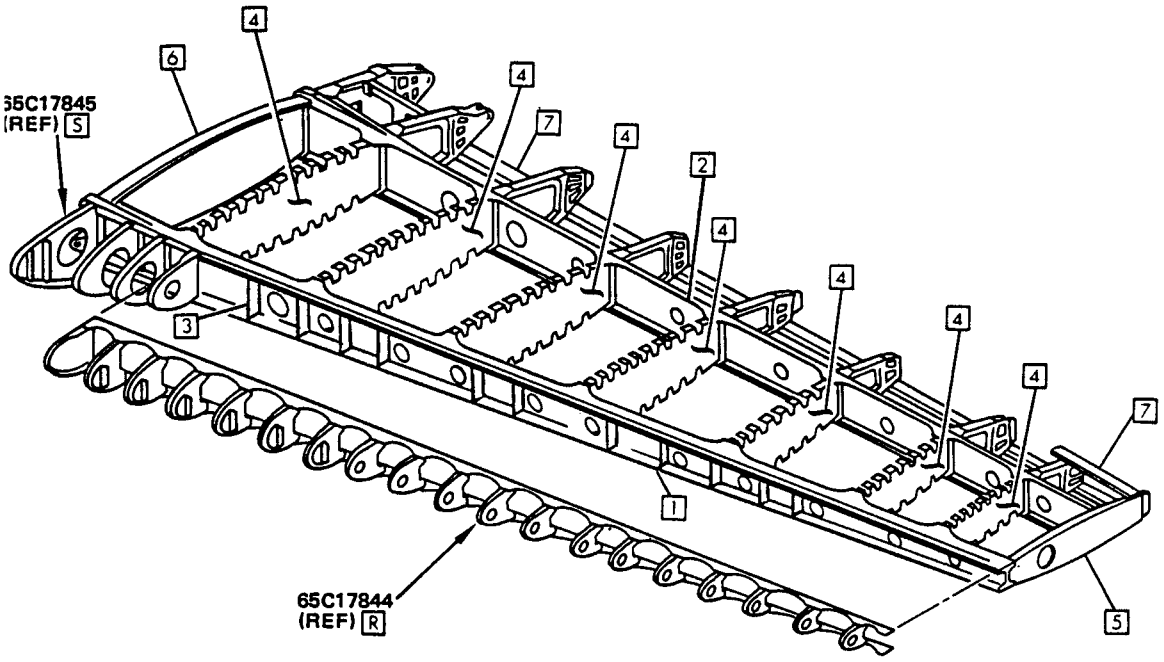


DETAIL I

Graphite Composite Horizontal Stabilizer Structure Identification
Figure 4 (Sheet 2)

| ITEM | DESCRIPTION | GAGE | MATERIAL | EFFECTIVITY |
|---|---|---|---|---|
| 1 | FRONT SPAR | | GRAPHITE/EPOXY LAMINATE (SEE DETAIL II) | |
| 2 | REAR SPAR | | GRAPHITE/EPOXY LAMINATE (SEE DETAIL III) | |
| 3 | STIFFENER | | GRAPHITE/EPOXY LAMINATE (SEE DETAIL IV) | |
| 4 | RIB | | GRAPHITE/EPOXY HONEYCOMB SANDWICH | |
| | SKIN | | (SEE DETAIL V) | |
| | CORE | | NOMEX HONEYCOMB PER BMS 8–124, CLASS IV, TYPE V GRADE 3.0 | |
| 5 | RIB | | GRAPHITE/EPOXY LAMINATE (SEE DETAIL VI) | |
| 6 | RIB | | GRAPHITE/EPOXY LAMINATE (SEE DETAIL VII) | |
| 7 | BEAM, T.E. | | GRAPHITE/EPOXY LAMINATE (SEE DETAIL VIII) | |

LIST OF MATERIALS FOR DETAIL I

Graphite Composite Horizontal Stabilizer Structure Identification
Figure 4 (Sheet 3)

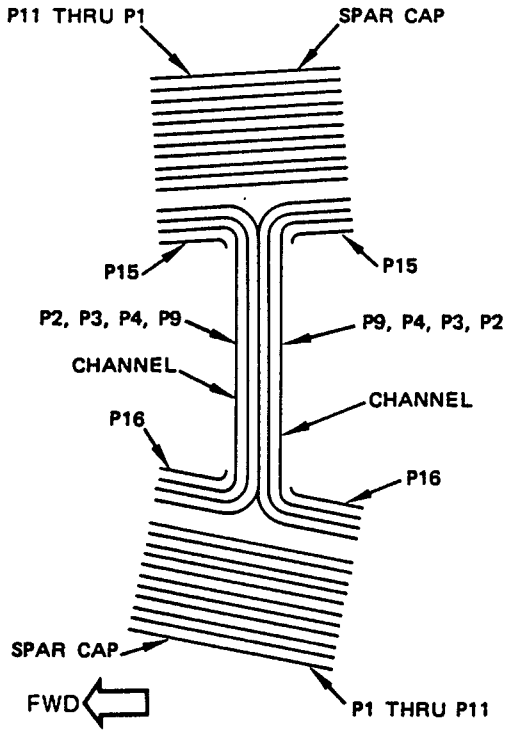


SECTION THRU PLIES
(TYPICAL STA 83.50 THRU STA 258.28)

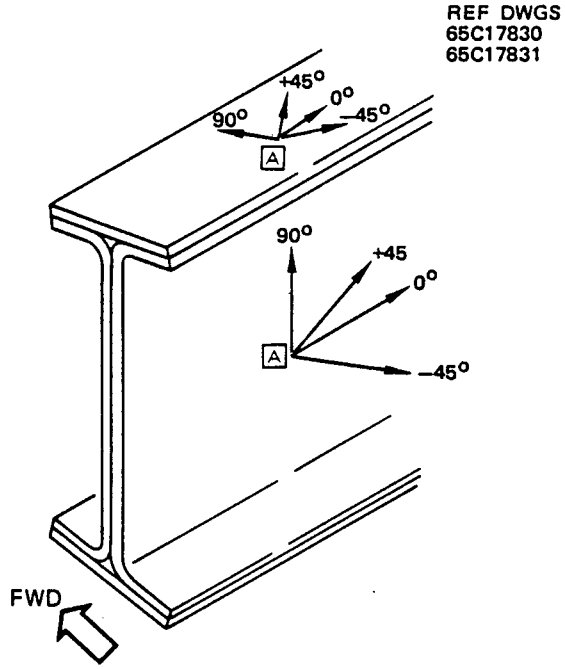


PLY ORIENTATION

| ITEM NO. | PLY NO. | MATERIAL | PLY ORIENTATION [A] | EFFECTIVITY | |
|---|---|---|---|---|---|
| SPAR CAP (65C17830 REF) | P11 | [B] | 0° | [H] | |
| | P1 | [C] | | | |
| | P3 | | | | |
| | P5 | | | | |
| | P6 | | | | |
| | P8 | | | | |
| | P10 | | | | |
| | P2 | | ± 45° | | |
| | P4 | | | | |
| | P7 | | | | |
| | P9 | | | | |
| CHANNEL (65C17831 REF) | P15 | [B] | 0° OR 90° | [J] | |
| | P16 | [B] | 0° OR 90° | [J] | |
| | P2 | [C] | ± 45° | [J] | [K] |
| | P3 | | ± 45° | | |
| | P4 | | 0° | [J] | |
| | P9 | | ± 45° | [J] | |

PLY TABLE FOR DETAIL II

Graphite Composite Horizontal Stabilizer Structure Identification
Figure 4 (Sheet 4)

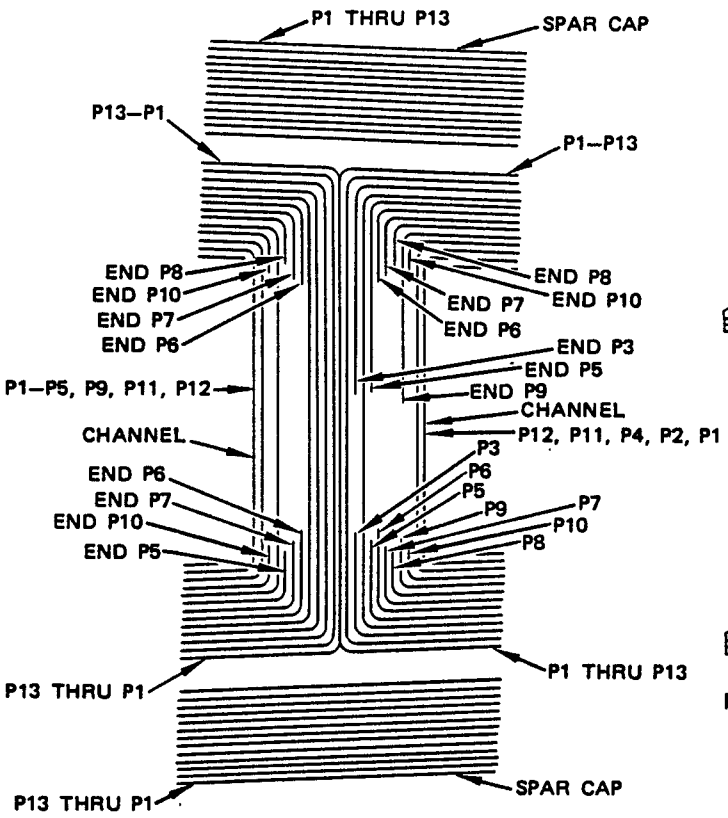


SECTION THRU PLIES
(TYPICAL STA 129.50)

REF DWGS
65C17840
65C17841

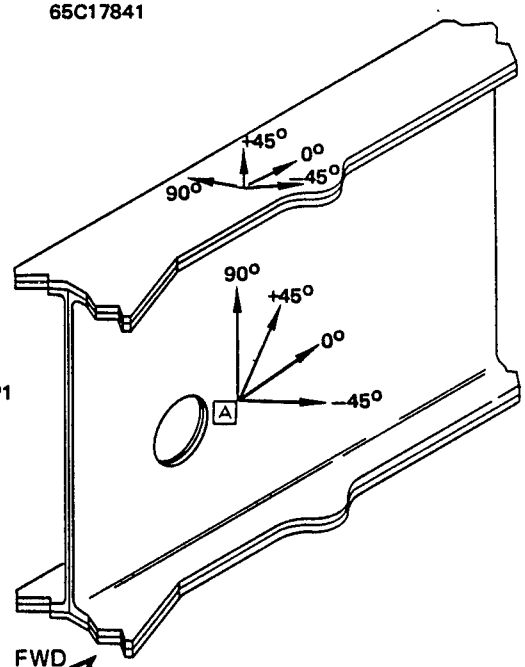


PLY ORIENTATION

| ITEM NO. | PLY NO. | MATERIAL | PLY ORIENTATION [A] | EFFECTIVITY |
|---|---|---|---|---|
| 2 SPAR CAP (65C17840 REF) | P13<br>P1<br>P3<br>P4<br>P6<br>P7<br>P9<br>P10<br>P12<br>P2<br>P5<br>P8<br>P11 | [B] [C] | 0°<br>± 45° | [H] |
| 2 CHANNEL (65C17841 REF) | P13<br>P1<br>P4<br>P6<br>P12<br>P9<br>P8<br>P2<br>P3<br>P5<br>P7<br>P10<br>P11<br>P8<br>P9 | [B] [C] | 0° OR 90°<br>0°<br>(P9 AFT CHANNEL)<br>(P8 FWD CHANNEL)<br>± 45°<br>(P8 AFT CHANNEL)<br>(P9 FWD CHANNEL) | [H] |

PLY TABLE FOR DETAIL III

Graphite Composite Horizontal Stabilizer Structure Identification
Figure 4 (Sheet 5)

REF DWG
65C17842

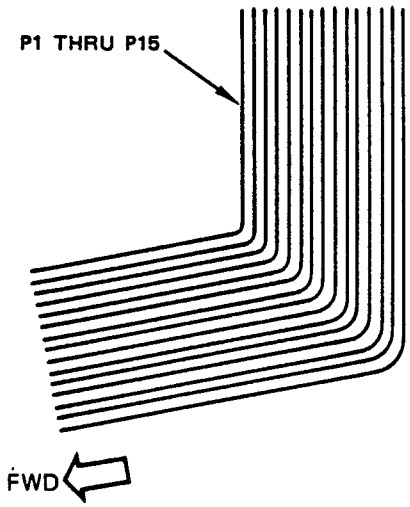


SECTION THRU PLIES (SEE NOTE)

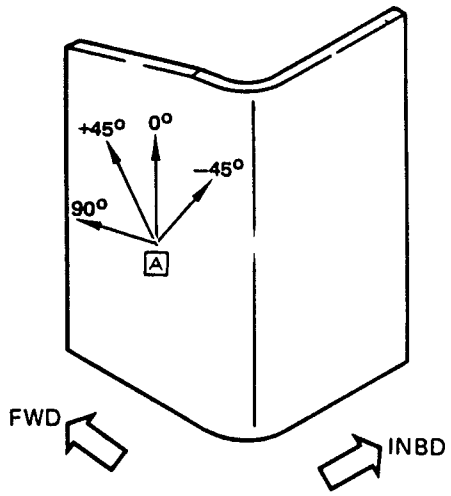


PLY ORIENTATION

NOTE: SECTION ILLUSTRATES STIFFENER AT STAB STA 83.50. SEE BOEING DRAWING 65C17842 FOR OTHER STIFFENERS

| ITEM NO. | PLY NO. | MATERIAL | PLY [A] ORIENTATION | EFFECTIVITY |
|---|---|---|---|---|
| 3 | P1 | [C] | 0° | [H] |
| | P3 | | | |
| | P5 | | | |
| | P6 | | | |
| | P7 | | | |
| | P9 | | | |
| | P10 | | | |
| | P11 | | | |
| | P13 | | | |
| | P15 | | | |
| | P2 | | ± 45° | |
| | P4 | | | |
| | P8 | | | |
| | P12 | | | |
| | P14 | | | |

PLY TABLE FOR DETAIL IV

Graphite Composite Horizontal Stabilizer Structure Identification
Figure 4 (Sheet 6)

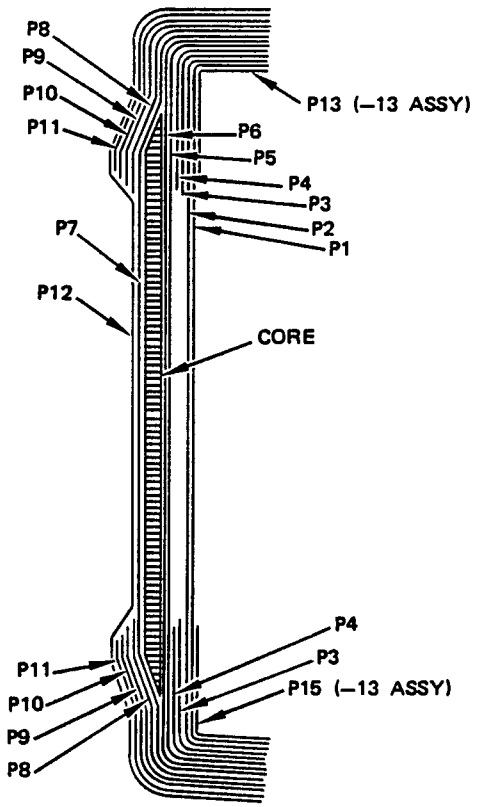


SECTION THRU PLIES [1]

REF DWG
65C17810
THRU
65C17816

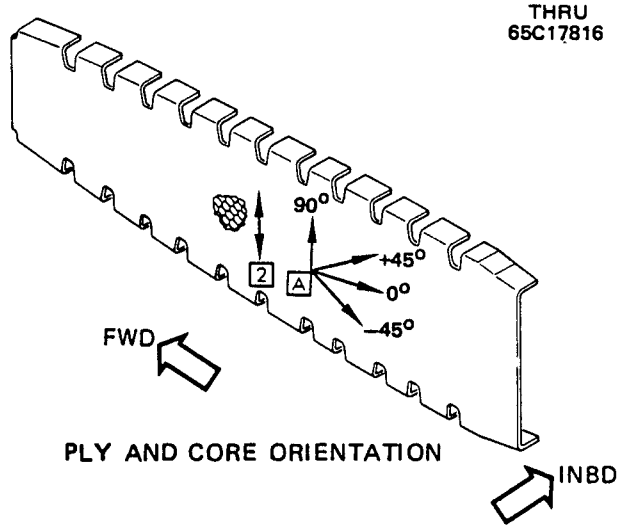


PLY AND CORE ORIENTATION

[1] SECTION ILLUSTRATES RIB AT STAB STA 83.50. SEE BOEING DRAWINGS 65C17811 THRU 65C17816 FOR OTHER SIMILAR RIBS.

[2] CORE RIBBON DIRECTION

| ITEM NO. | PLY NO. | MATERIAL | PLY [A] ORIENTATION | EFFECTIVITY |
|---|---|---|---|---|
| 4 | P1 | [C] | ± 45° | [M] |
| | P3 | | | [N] |
| | P5 | | | |
| | P8 | | | [N] |
| | P10 | | | [N] |
| | P12 | | | [N] |
| | P2 | | 0° | |
| | P6 | | | |
| | P7 | | | [N] |
| | P4 | | 0° OR 90° | |
| | P9 | | | |
| | P11 | | | |
| | P1 | [E] | 90° | |
| | P2 | | +45° | |
| | P5 | | –45° | |
| | P6 | | 0° | |
| | P13 | [B] | 0° OR 90° | |
| | P15 | | | |

PLY TABLE FOR DETAIL V

Graphite Composite Horizontal Stabilizer Structure Identification
Figure 4 (Sheet 7)

REF DWG
65C17818

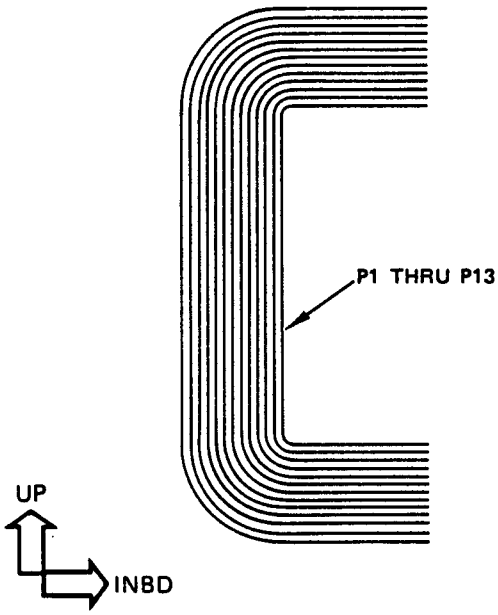


SECTION THRU PLIES

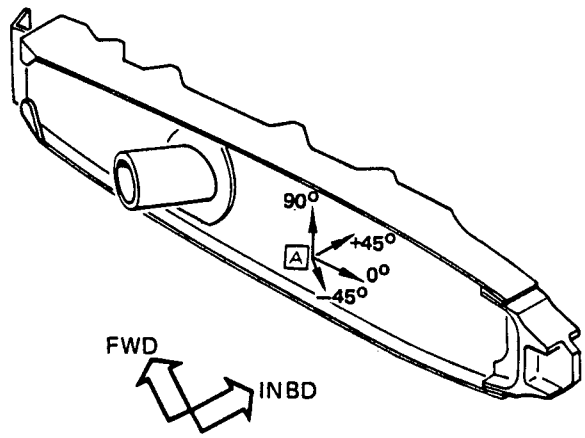


PLY ORIENTATION

| ITEM NO. | PLY NO. | MATERIAL | PLY ORIENTATION A | EFFECTIVITY |
|---|---|---|---|---|
| | P13 | B | ± 45° | K L |
| | P1 | C | | |
| | P3 | | | |
| | P5 | | | |
| | P8 | | | P |
| | P10 | | | P |
| | P12 | | | P |
| 5 | P2 | | 0° OR 90° | |
| | P4 | | | |
| | P6 | | | |
| | P7 | | | P |
| | P9 | | | |
| | P11 | | | |
| | P3 | | | |
| | P5 | | | |
| | P2 | | + −45° | |
| | P4 | | | |
| | P6 | | | |
| | P13 | B | 0° OR 90° | |
| | P1 | B | 0° OR 90° | |

PLY TABLE FOR DETAIL VI

Graphite Composite Horizontal Stabilizer Structure Identification
Figure 4 (Sheet 8)

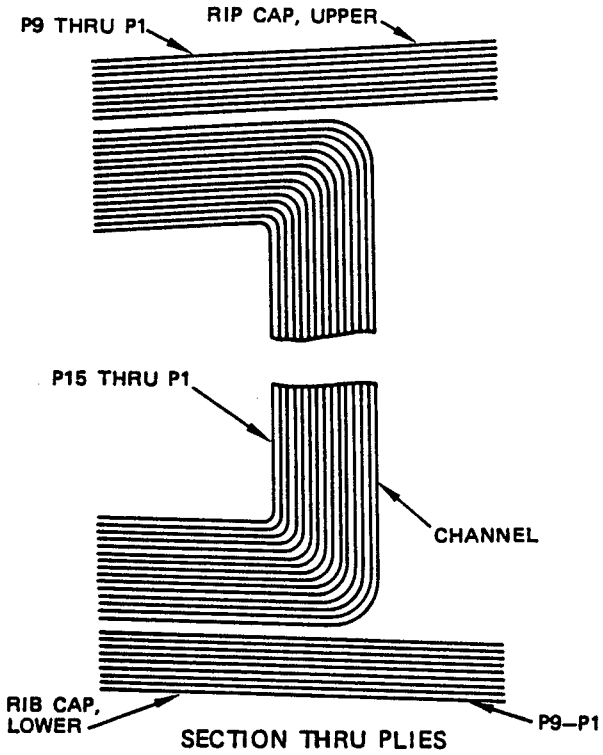


SECTION THRU PLIES

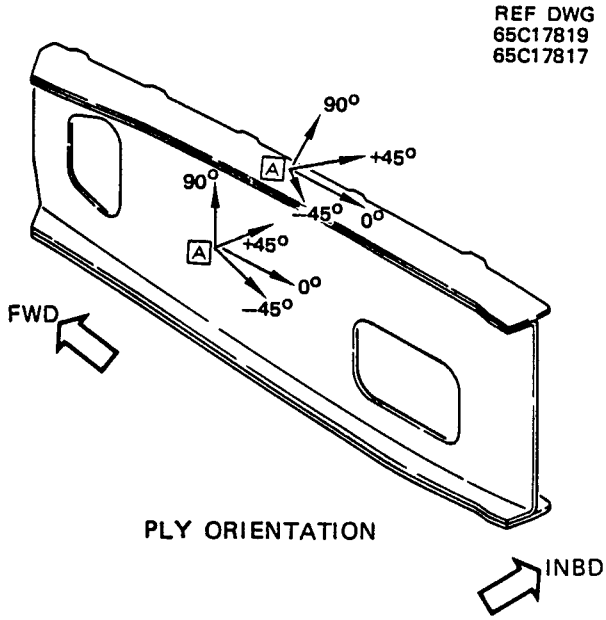


PLY ORIENTATION

| ITEM NO. | PLY NO. | MATERIAL | PLY ORIENTATION [A] | EFFECTIVITY |
|---|---|---|---|---|
| 6 CHANNEL | P1 | [B] | 0° OR 90° | [H] |
| | P3 | [C] | | |
| | P5 | | | |
| | P7 | | | |
| | P10 | | | |
| | P12 | | | |
| | P14 | | | |
| | P2 | | ± 45° | |
| | P4 | | | |
| | P6 | | | |
| | P8 | | | |
| | P9 | | | |
| | P11 | | | |
| | P13 | | | |
| | P15 | | | |
| 6 RIB CAP | P1 | [B] | 0° OR 90° | |
| | P9 | [B] | | |
| | P2 | [C] | | |
| | P4 | | | |
| | P6 | | | |
| | P8 | | | |
| | P3 | | ± 45° | |
| | P5 | | | |
| | P7 | | | |

PLY TABLE FOR DETAIL VII

Graphite Composite Horizontal Stabilizer Structure Identification
Figure 4 (Sheet 9)

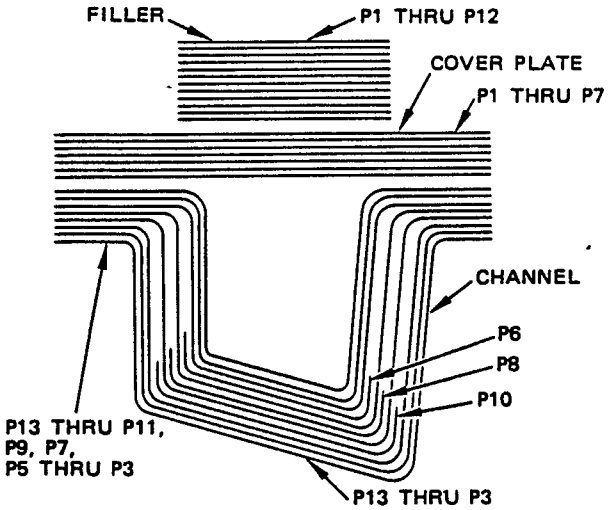


SECTION THRU PLIES

REF DWG
65C17860
65C17861

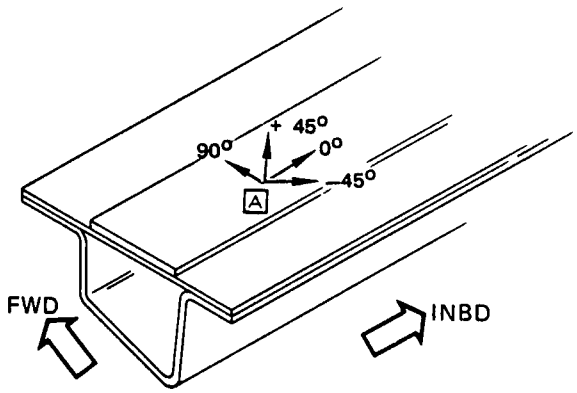


PLY ORIENTATION
(UPPER BEAM SHOWN,
LOWER BEAM OPPOSITE)

| ITEM NO. | PLY NO. | MATERIAL | PLY ORIENTATION [A] | EFFECTIVITY |
|---|---|---|---|---|
| 7 CHANNEL | P13<br>P3<br>P12<br>P4<br>P5<br>P7<br>P9<br>P11<br>P6<br>P8<br>P10 | [B] [C] ↓ [E] | 0°<br>± 45°<br>0° ↓ | [1] ↓ |
| 7 FILLER | P1<br>P3<br>P5<br>P8<br>P10<br>P12<br>P2<br>P4<br>P6<br>P7<br>P9<br>P11 | [C] ↓ | ± 45° ↓<br>0° ↓ | ↓ |
| 7 COVER PLATE | P1<br>P3<br>P5<br>P7<br>P2<br>P4<br>P6 | [C] ↓ | ± 45° ↓<br>0° ↓ | ↓ |

PLY TABLE FOR DETAIL VIII

Graphite Composite Horizontal Stabilizer Structure Identification
Figure 4 (Sheet 10)

## REPAIR INSTRUCTIONS

1. Replace this external repair with a flush repair of 55-10-3, Fig. 2 at the earliest convenient time.
2. Stop drill with 0.25 diameter holes at the end of all cracks that do not end in a fastener hole or make cutout as described in repair Step 3.
3. Trim out damaged skin to form a smooth rectangular opening parallel to the adjacent rib chords. The maximum cutout must allow for a minimum of two rows of fasteners on all edges of the cutout.
4. Return all indented or projecting skin to contour. Remove all burrs, nicks, scratches, sharp edges or corners from damaged area.
5. Cut out plate, chamfer edges as shown, lay out rivet pattern and form to leading edge contour.
6. Locate formed plate over skin and drill all fastener holes.
7. Remove repair part [1]. Remove all burrs on part [1] and skin.
8. Alodize chamfered edges of part [1].
9. Apply a faying surface seal similar to the procedures outlined in 53-30-4 and install part [1] and all fasteners.
10. Refinish surfaces in accordance with Maintenance Manual 51-21-0.

## NOTES

- THIS REPAIR WILL NOT HAVE AN EFFECT ON A STRUCTURALLY SIGNIFICANT ITEM (SSI) GIVEN IN SRM 51-00-4, FIG. 3. THUS, NO CHANGE TO THE SUPPLEMENTAL STRUCTURAL INSPECTION DOCUMENT (SSID) INSPECTION PROGRAM IS NECESSARY.
- BREAK SHARP EDGES 0.03 ON REPAIR PARTS AND TRIMMED ORIGINAL PARTS.
- SEE 51-30 FOR FASTENER CODE, REMOVAL AND INSTALLATION, HOLE SIZES AND EDGE MARGINS.
- SEE 51-10-2 FOR METAL PROTECTIVE TREATMENT.
- SEE 53-30-4 FOR FAYING SURFACE SEALING.
- SEE 51-70 FOR AERODYNAMIC SMOOTHNESS REQUIREMENTS.
- D = FASTENER DIAMETER

## FASTENER SYMBOLS

REPAIR FASTENER LOCATIONS

| REPAIR MATERIAL | | | |
|---|---|---|---|
| PART | | QTY | MATERIAL |
| [1] | PATCH | 1 | 0.063 INCH THICK CLAD 2024-T3 |

Horizontal Stabilizer Leading Edge Skin External Repair
Figure 1 (Sheet 1)



BOEING PROPRIETARY - Copyright © - Unpublished Work - See title page for details.

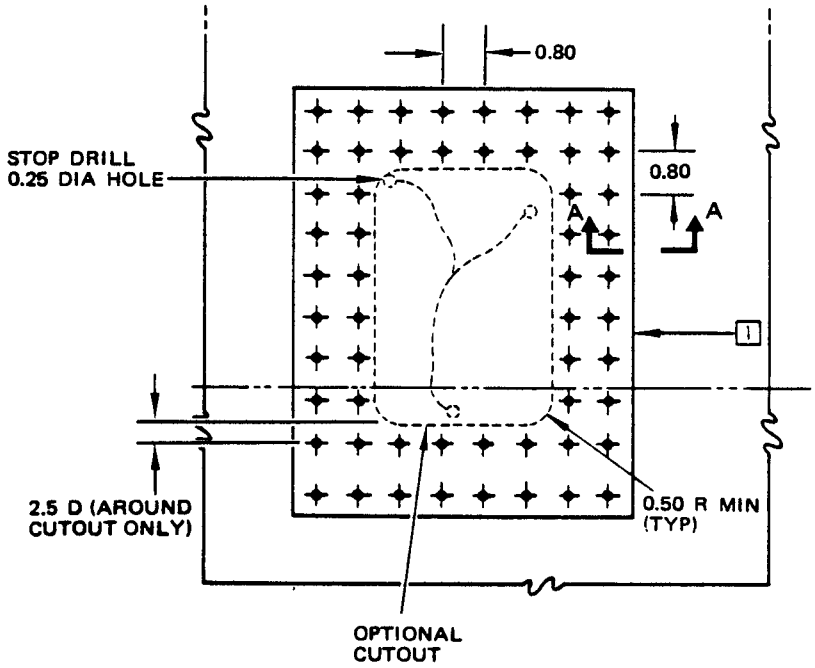


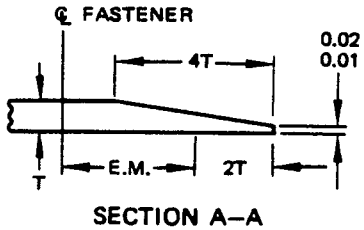


SECTION A–A

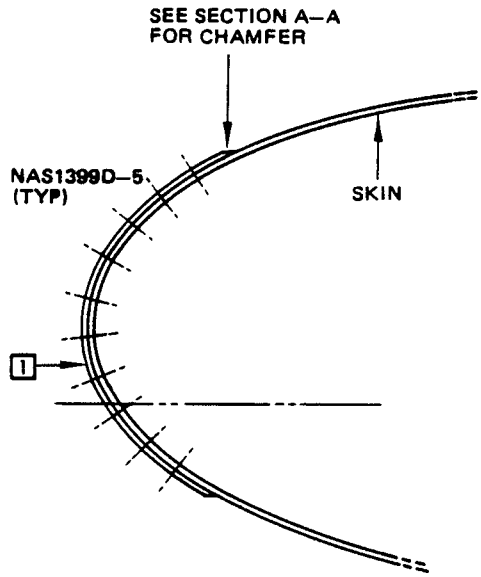


SECTION THROUGH REPAIR

Horizontal Stabilizer Leading Edge Skin External Repair
Figure 1 (Sheet 2)

## REPAIR INSTRUCTIONS

1. Get access to the damaged area.

   NOTE: If an external repair has previously been installed, remove the fasteners as given in SRM 51-30-2. Remove the external plate and all sealant material, and then complete applicable repair steps 3 through 14.

2. Cut and remove the damaged part of the leading edge skin. Keep the edges of the cut-out parallel to the leading edge ribs. Make sure that the leading edge skin has the initial contour.

3. Measure the dimensions of the damage cutout. Refer to Detail I. If the dimensions A and B are each less than or equal to 2.0 inches, refer to the repair shown in Detail II. If either dimension A or B is more than 2.0 inches, refer to the repair shown in Detail III.

4. Make the repair parts. See Table I.

5. Break all sharp edges of the skin cutout and repair parts.

6. Assemble the repair parts and drill the fastener holes.

   NOTE: If an external repair part is being replaced drill fasteners holes in the Part 1 (Plate) to match the initial hole locations in the skin.

7. Disassemble the repair parts. Remove the nicks, scratches, gouges, burrs, and sharp edges from the leading edge skin and repair parts.

8. Apply a chemical conversion coating to the repair parts and to the bare surfaces of the leading edge skin. Refer to SRM 51-10-2.

9. Apply one layer of BMS 10-11, Type I primer to the repair parts and to the bare surfaces of the leading edge skin. Refer to SOPM 20-41-02.

10. Install the repair parts with BMS 5-95 sealant between the mating surfaces.

11. Install the fasteners wet with BMS 5-95.

12. Apply BMS 5-79 or BMS 5-95 sealant in the gap between the skin cut-out and filler.

13. Apply a fillet seal with BMS 5-95 on all edges of the Part 1 (Plate). Refer to SRM 51-20-4.

14. Restore the initial finish. Refer to SOPM 20-41-02.

## NOTES

- THIS REPAIR WILL NOT HAVE AN EFFECT ON A STRUCTURALLY SIGNIFICANT ITEM (SSI) GIVEN IN SRM 51-00-4, FIG. 3. THUS, NO CHANGE TO THE SUPPLEMENTAL STRUCTURAL INSPECTION DOCUMENT (SSID) INSPECTION PROGRAM IS NECESSARY.
- WHEN YOU USE THIS REPAIR REFER TO:
  - NDT PART 6, 51-00-00 FOR EDDY CURRENT INSPECTION
  - SOPM 20-41-02 FOR APPLICATION OF FINISHES
  - SRM 51-10-1 FOR INVESTIGATION AND CLEAN-UP OF DAMAGE
  - SRM 51-10-2 FOR PROTECTIVE TREATMENT OF METAL
  - SRM 51-20-4 FOR REPAIR SEALING
  - SRM 51-30 FOR FASTENER CODE, INSTALLATION AND REMOVAL, HOLE SIZES AND EDGE MARGINS.

## FASTENER SYMBOLS

REPAIR FASTENER LOCATION

| REPAIR MATERIAL | | | |
|---|---|---|---|
| PART | | QTY | MATERIAL |
| 1 | PLATE | 1 | 0.063 CLAD 2024-T3 |
| 2 | FILLER | 1 | 0.040 CLAD 2024-T3 |

TABLE I

Horizontal Stabilizer Leading Edge Skin Flush Repair
Figure 2 (Sheet 1)


BOEING PROPRIETARY - Copyright © - Unpublished Work - See title page for details.

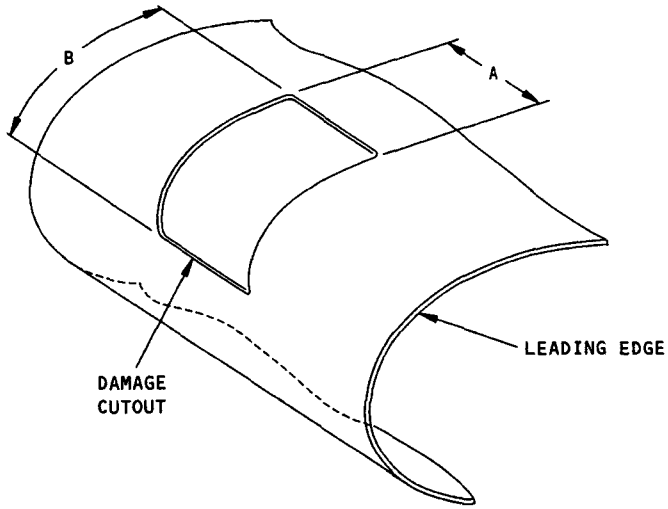


DETAIL I
(CUTOUT DIMENSIONS)

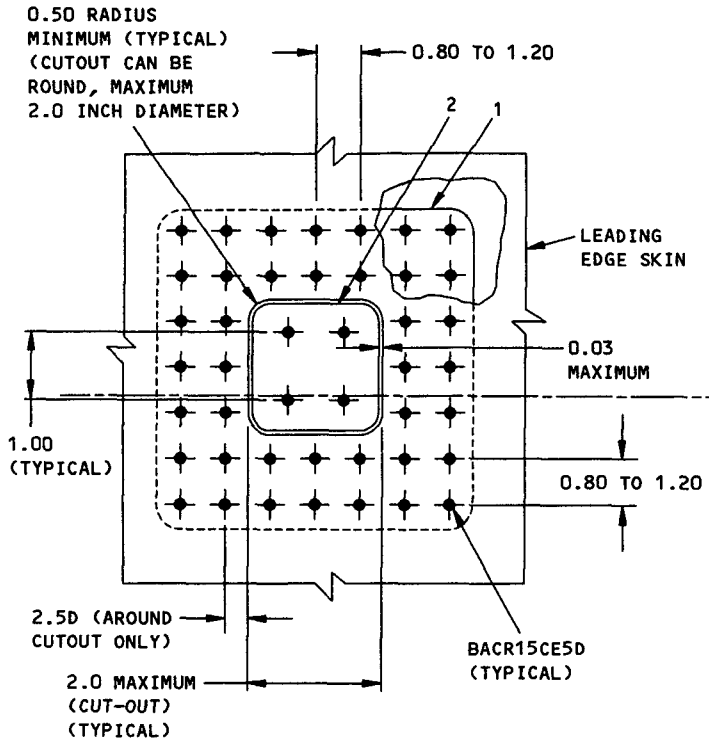


DETAIL II
(FOR DAMAGE CUTOUTS SMALLER THAN 2.0 INCHES)

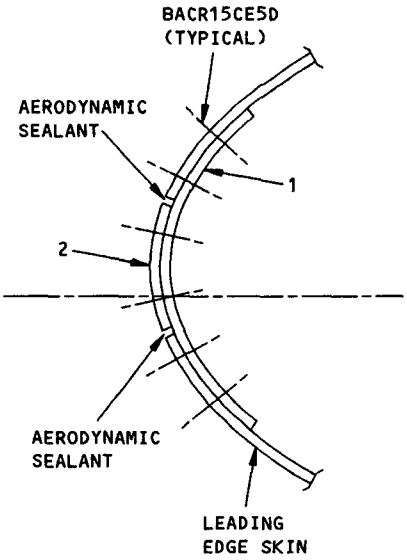


SECTION THROUGH LEADING EDGE REPAIR

Horizontal Stabilizer Leading Edge Skin Flush Repair
Figure 2 (Sheet 2)


BOEING PROPRIETARY - Copyright © - Unpublished Work - See title page for details.

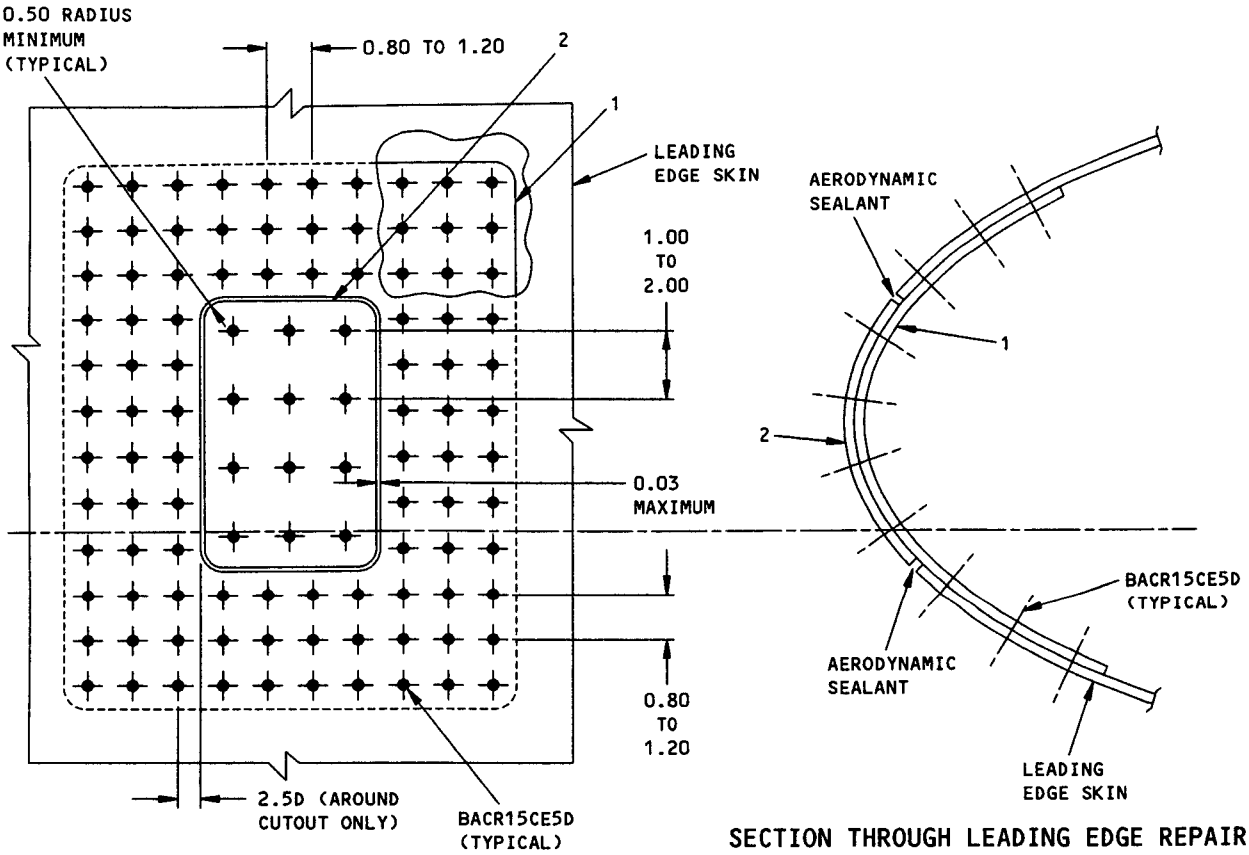


DETAIL III
(FOR DAMAGE CUTOUTS BIGGER THAN 2.0 INCHES)

SECTION THROUGH LEADING EDGE REPAIR

Horizontal Stabilizer Leading Edge Skin Flush Repair
Figure 2 (Sheet 3)


BOEING PROPRIETARY - Copyright © - Unpublished Work - See title page for details.

## REPAIR INSTRUCTIONS

1. Stop drill with 0.25 diameter holes at end of all cracks that do not end in a fastener hole (refer to SRM 51-10-01) or make optional cut as described in repair step 2.
2. Trim out damaged skin to form a smooth rectangular opening parallel to adjacent rib chords.
3. Return all indented or projecting skin to contour. Remove all burrs, nicks, scratches, sharp edges or corners from the damaged area.
4. Cut out plate, chamfer edges as shown, lay out rivet pattern, and form a leading edge contour.
5. Locate formed plate over skin and drill all fastener holes.
6. Remove plate and remove all burrs on plate and skin.
7. Alodize chamfered edges of part 1.
8. Apply a faying surface seal similar to the procedures outlined in SRM 51-40-5 and install the plate and all fasteners.
9. Refinish exterior surfaces in accordance with the AMM 51-21-0.

## NOTES

- THIS REPAIR COULD HAVE AN EFFECT ON A STRUCTURALLY SIGNIFICANT ITEM (SSI) GIVEN IN SRM 51-00-4, FIG. 3. BUT, NO CHANGE TO THE SUPPLEMENTAL STRUCTURAL INSPECTION DOCUMENT (SSID) INSPECTION PROGRAM IS NECESSARY.
- THE BLIND RIVET REPAIR IS TIME LIMITED. MAKE A VISUAL INSPECTION OF THE REPAIR AT EVERY 3000 FLIGHT HOURS. RIVETS THAT ARE LOOSE, DAMAGED, OR THAT HAVE FALLEN OUT MUST BE REPLACED. REPLACE THE BLIND RIVET REPAIR WITH A FLUSH SOLID RIVET REPAIR NO MORE THAN 15,000 FLIGHT HOURS AFTER INSTALLATION OF THE BLIND RIVET REPAIR. THIS REPAIR HAS FAA APPROVAL IF THE INSPECTIONS ARE COMPLETED AT THE SPECIFIED TIMES.
- BREAK SHARP EDGES 0.03 ON REPAIR PARTS AND TRIMMED ORIGINAL PARTS.
- WHEN YOU USE THIS REPAIR REFER TO:
  - SRM 51-10-2 FOR METAL PROTECTIVE TREATMENT
  - SRM 51-30 FOR FASTENER CODE, REMOVAL AND INSTALLATION, HOLE SIZES AND EDGE MARGINS
  - SRM 51-70 FOR AERODYNAMIC SMOOTHNESS REQUIREMENTS
  - SRM 53-30-4 FOR FAYING SURFACE SEALING.

| REPAIR MATERIAL | | | |
|---|---|---|---|
| PART | | QTY | MATERIAL |
| 1 | PLATE | 1 | 0.080 CLAD 2024-T3 |

Horizontal Stabilizer Skin External Repair
Figure 3 (Sheet 1)


BOEING PROPRIETARY - Copyright © - Unpublished Work - See title page for details.

FASTENER SYMBOLS

REPAIR FASTENER LOCATIONS

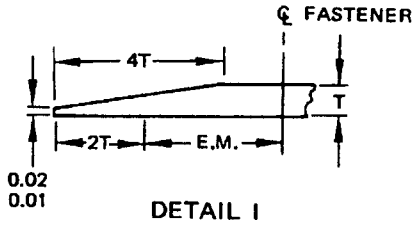


DETAIL I

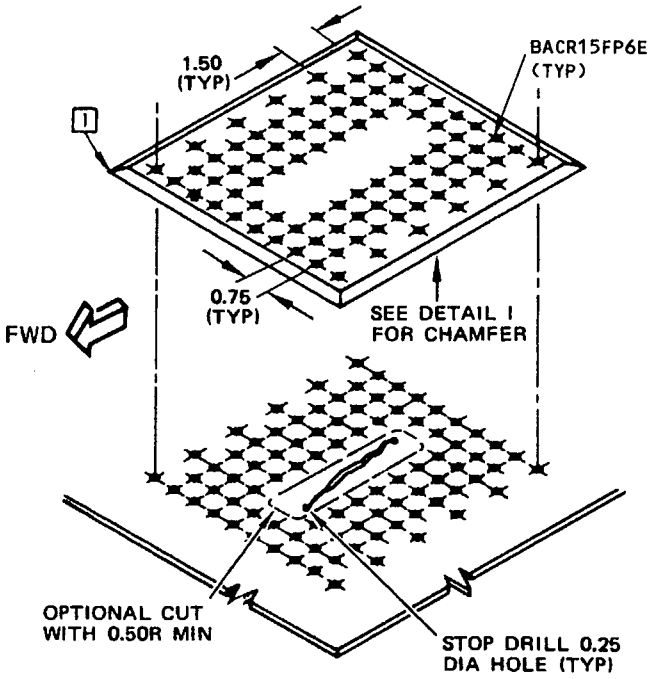


Horizontal Stabilizer Skin External Repair
Figure 3 (Sheet 2)

| APPLICABILITY |
| --- |
| REPAIR IS APPLICABLE OUTBOARD OF STABILIZER STATION 83.50. |

## REPAIR INSTRUCTIONS

1. Remove leading edge skin and reach through the access holes in the front spar or remove inspar skin panel to install repair plate on inside of skin surface.
2. If an external repair has previously been made drill out fasteners and remove external plate and all sealant material and then complete the applicable repair steps 4 through 12.
3. Trim out the damaged skin to form a rectangular opening parallel to the adjacent rib chords and complete repair steps 3 through 12.
4. Return all indented or projecting skin to contour. Remove all burrs, nicks, scratches, sharp edges or corners from damaged area.
5. Make filler [1] to match skin cutout with not more than 0.03 between filler [1] and skin edges.
6. Cut out plate [2] and form to skin contour and lay out rivet pattern. If an external repair part is being replaced locate fasteners in part [2] to match existing locations in the skin.
7. Bond and rivet part [1] to [2] and [2] to skin as outlined in 51-40-5. Bonded and riveted repairs are preferred to riveted repairs without bonding.
8. If the preferred bonded and riveted repair of step 7 is not used then install repair parts with a faying surface seal similar to the procedures outlined in 53-30-4.
9. Refinish interior surface as given in AMM 51-21-0.
10. Apply aerodynamic smoother BMS 5-79 between skin edge on [1] as given in AMM 51-31-0.
11. Replace leading edge and all fasteners.
12. Restore external finish as given in AMM 51-21-0 as required.

## NOTES

- THIS REPAIR COULD HAVE AN EFFECT ON A STRUCTURALLY SIGNIFICANT ITEM (SSI) GIVEN IN SRM 51-00-4, FIG. 3. BUT, NO CHANGE TO THE SUPPLEMENTAL STRUCTURAL INSPECTION DOCUMENT (SSID) INSPECTION PROGRAM IS NECESSARY.
- BREAK SHARP EDGES 0.03 ON REPAIR PARTS AND TRIMMED ORIGINAL PARTS.
- REFER TO SRM 51-30 FOR FASTENER CODE, REMOVAL AND INSTALLATION, HOLE SIZES AND EDGE MARGINS.
- REFER TO SRM 51-10-2 FOR METAL PROTECTIVE TREATMENT.
- REFER TO 53-30-4 FOR FAYING SURFACE SEALING.
- REFER TO 51-40-5 FOR BONDING AND RIVETING PROCEDURE.

## FASTENER SYMBOLS

REPAIR FASTENER LOCATIONS

| REPAIR MATERIAL | | | |
| --- | --- | --- | --- |
| PART | | QTY | MATERIAL |
| [1] | FILLER | 1 | 0.040 CLAD 2024-T3 |
| [2] | PLATE | 1 | 0.071 CLAD 2024-T3 |

Horizontal Stabilizer Interspar Skin Flush Repair
Figure 4 (Sheet 1)


BOEING PROPRIETARY - Copyright © - Unpublished Work - See title page for details.

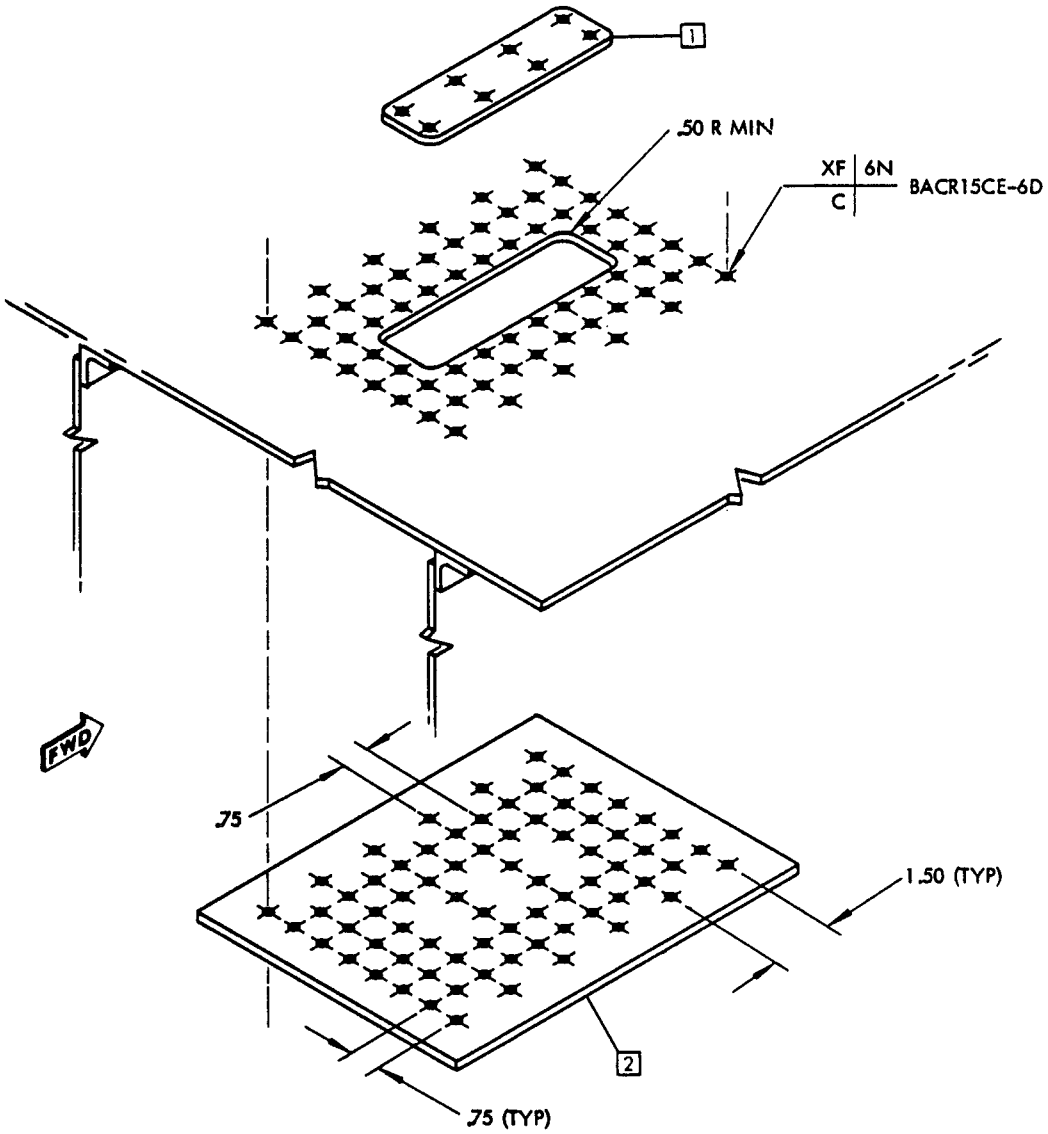




Horizontal Stabilizer Interspar Skin Flush Repair
Figure 4 (Sheet 2 of 2)

| APPLICABILITY |
| --- |
| THIS REPAIR IS APPLICABLE TO THE AREA INBOARD OF STABILIZER STA 83.50. |

## REPAIR INSTRUCTIONS

1. For optimum performance of the airplane, replace this external repair with a flush repair as given in SRM 55-10-3, Fig. 6 at the earliest convenient time.
2. Stop drill with 0.25 inch diameter holes at end of all cracks that do not end in a fastener hole or make a cutout as given in repair step 3.
3. Trim out the damaged skin to form a smooth rectangular opening parallel to the adjacent rib chords. The maximum cutout must permit for a minimum of two rows of fasteners on edges of cutout.
4. Return all indented or projecting skin to contour. Remove all burrs, nicks, scratches, sharp edges or corners from damaged area.
5. Cut out part [1] and chamfer the edges as shown. Layout fastener pattern and form to contour.
6. Locate part [1] on the damaged area and drill the fastener holes.
7. Remove part [1] and remove all burrs on parts [1] and the skin.
8. Apply a chemical conversion coating to the repair part and the cut edges of the initial parts as given in SRM 51-10-2.
9. Apply a mating surface seal as given in SRM 51-20-4 and install part [1] and the fasteners.
10. Apply the finish as given in AMM 51-21-0.

## NOTES

- THIS REPAIR, IF INSTALLED OVER THE FRONT OR REAR SPAR-TO-SKIN ATTACHMENT FASTENERS, COULD HAVE AN EFFECT ON SSI NUMBER E-17 OR E-18 AS GIVEN IN SRM 51-00-4, FIG. 3. IF THE REPAIR INTERFERES WITH SSID INSPECTIONS, REPLACE WITH A FLUSH REPAIR. NO CHANGE TO THE SUPPLEMENTAL STRUCTURAL INSPECTION DOCUMENT (SSID) INSPECTION PROGRAM IS NECESSARY.
- WHEN YOU DO THIS REPAIR, REFER TO:
  - SRM 51-10-1 FOR INVESTIGATION AND CLEANUP OF DAMAGE
  - SRM 51-10-2 FOR METAL PROTECTIVE TREATMENT
  - SRM 51-20-4 FOR REPAIR SEALING
  - SRM 51-30 FOR FASTENER CODE, REMOVAL AND INSTALLATION, HOLE SIZES AND EDGE MARGINS
  - SRM 51-70 FOR AERODYNAMIC SMOOTHNESS REQUIREMENTS.

## FASTENER SYMBOLS

✦ REPAIR FASTENER LOCATIONS

| REPAIR MATERIAL | | | |
| --- | --- | --- | --- |
| PART | | QTY | MATERIAL |
| [1] | PLATE | 1 | 0.08 INCH THICK CLAD 2024-T3 |

Horizontal Stabilizer Interspar Skin and Doubler External Repair
Figure 5 (Sheet 1)


BOEING PROPRIETARY - Copyright © - Unpublished Work - See title page for details.

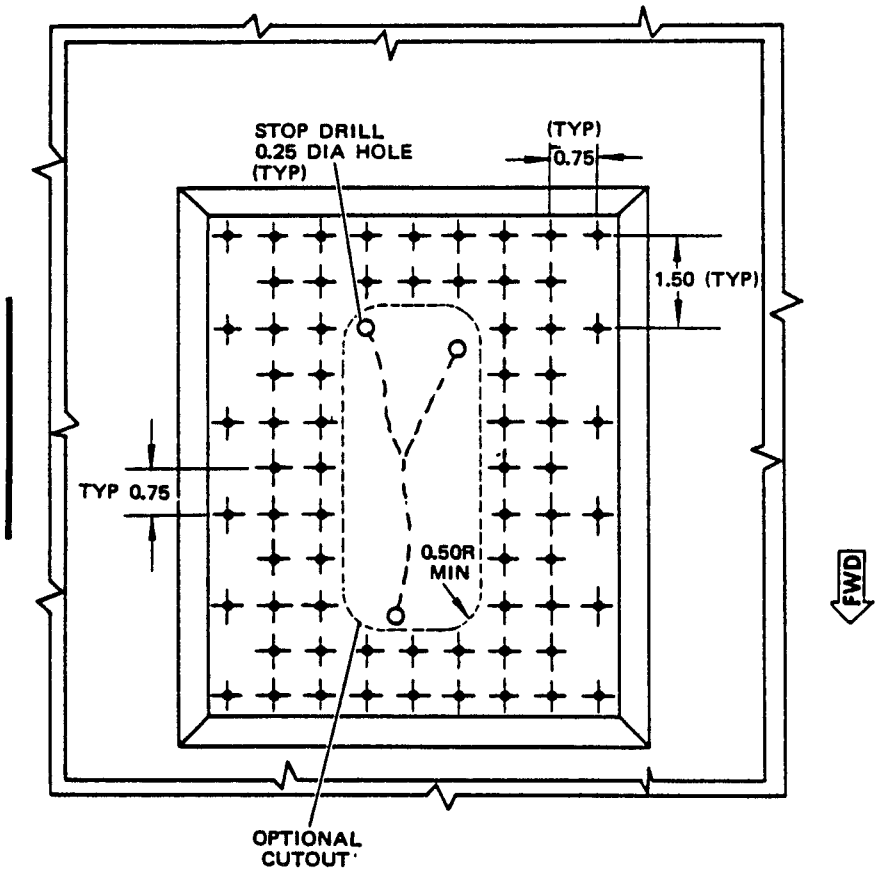


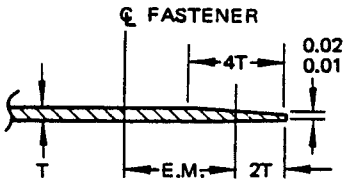


DETAIL I

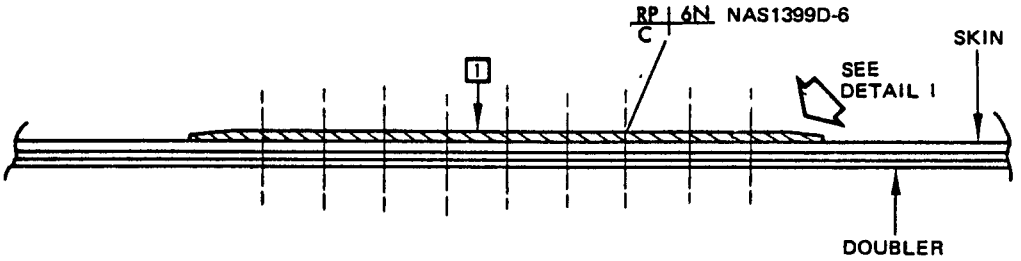


SECTION THROUGH REPAIR

Horizontal Stabilizer Interspar Skin and Doubler External Repair
Figure 5 (Sheet 2)

| APPLICABILITY |
| --- |
| THIS REPAIR IS APPLICABLE TO THE AREA INBOARD OF STABILIZER STATION 83.50. |

## REPAIR INSTRUCTIONS

1. Remove the access doors in the bottom skin to install the repair plate on inside of the skin surface.
2. If an external repair has previously been made, drill out the fasteners and remove the external plate and all the sealant material. Do the applicable repair steps 3 through 12.
3. Trim out the damaged skin to form a rectangular opening parallel to the adjacent rib chords.
4. Put all the indented or projecting skin back to the initial contour. Remove all burrs, nicks, scratches, sharp edges or corners from damaged area.
5. Make the filler [1] to match the skin cutout with not more than 0.03 inch gap between the filler and the skin edges.
6. Cut out plate [2] and form to the inital contour and the layout rivet pattern. If an external repair part is being replaced, locate fastener holes in part [2] to match the initial locations in the skin.
7. Remove all nicks, scratches, burrs, and sharp edges from the initial and repair parts.
8. Apply a chemical conversion coating to the repair parts and the cut edges of the initial parts as given in SRM 51-10-2.
9. Bond and rivet part [1] to part [2] and part [2] to the skin as given in SRM 51-40-5. Bonded and riveted repairs are preferred to riveted repairs without bonding.
10. If the preferred bonded and riveted repair of step 7 is not used, then install the repair parts with a faying surface seal similar to procedures as given in SRM 53-30-4.
11. Refinish the interior surface as given in AMM 51-21-0.
12. Apply BMS 5-95 sealant between the skin edge and part [1] as given in AMM 51-31-0.
13. Replace and fasten the access doors on the bottom skin.
14. Restore the finish as given in AMM 51-21-0.

## NOTES

- THIS REPAIR COULD HAVE AN EFFECT ON A STRUCTURALLY SIGNIFICANT ITEM (SSI) GIVEN IN SRM 51-00-4, FIG. 3. BUT, NO CHANGE TO THE SUPPLEMENTAL STRUCTURAL INSPECTION DOCUMENT (SSID) INSPECTION PROGRAM IS NECESSARY.
- WHEN YOU DO THIS REPAIR, REFER TO:
  - SRM 51-10-2 FOR METAL PROTECTIVE TREATMENT
  - SRM 51-30 FOR FASTENER CODE, REMOVAL AND INSTALLATION, HOLE SIZES AND EDGE MARGINS
  - SRM 51-40-5 FOR BONDING AND RIVETING PROCEDURE
  - SRM 53-30-4 FOR FAYING SURFACE SEALING.

## FASTENER SYMBOLS

✦ REPAIR FASTENER LOCATIONS

| REPAIR MATERIAL | | | |
| --- | --- | --- | --- |
| PART | | QTY | MATERIAL |
| [1] | FILLER | 1 | 0.050 INCH THICK CLAD 2024-T3 |
| [2] | PLATE | 1 | 0.071 INCH THICK CLAD 2024-T3 |

Horizontal Stabilizer Interspar Skin and Doubler Flush Repair
Figure 6 (Sheet 1)


BOEING PROPRIETARY - Copyright © - Unpublished Work - See title page for details.

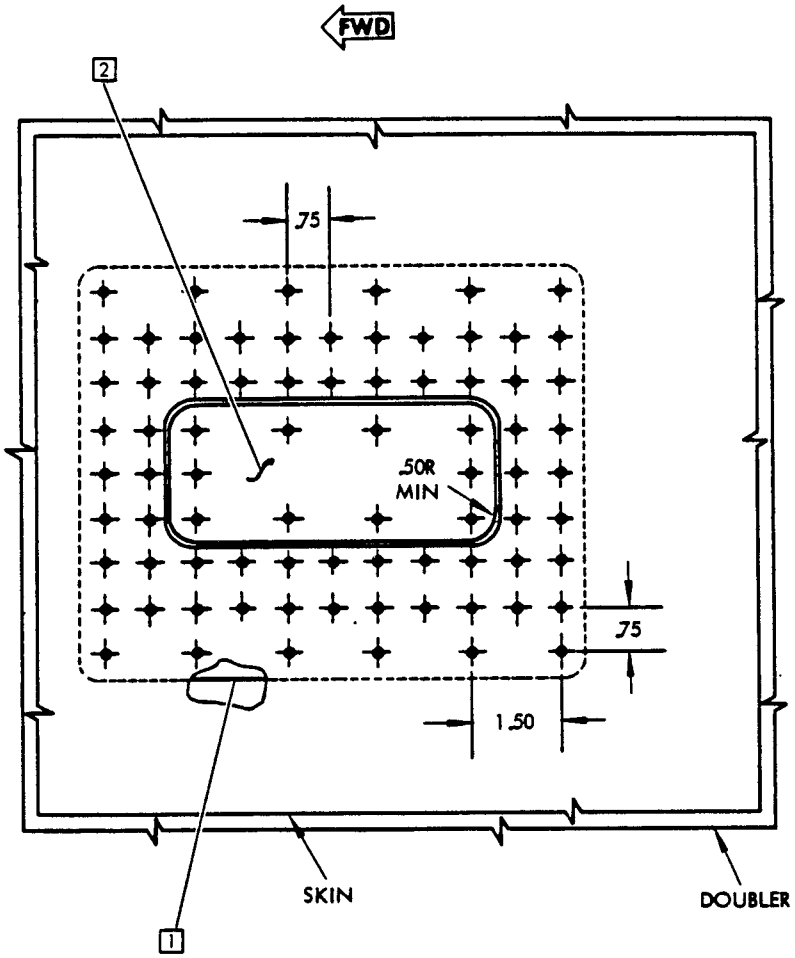


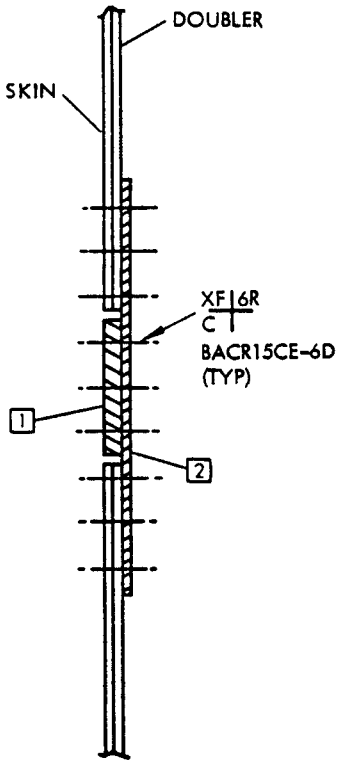


SECTION THROUGH REPAIR

| APPLICABILITY |
| --- |
| THIS REPAIR IS APPLICABLE TO RIB AREAS OUTBOARD OF STABILIZER STA 83.50. |

## REPAIR INSTRUCTIONS

1. For the best airplane performance replace this external repair with a flush repair at the earliest opportunity.
2. Drill 0.25 inch stop holes at the ends of each crack that does not end at the fastener hole or cutout as given in Repair Step 3.
3. Trim the damaged skin and doubler on each side across the rib. Make the cut in the shape of a rectangle with the two sides parallel to the rib.
4. Drill out the initial fasteners as necessary.
5. Put all the indented or projected skin back to the initial contour. Remove all the burrs, nicks, scratches, sharp edges or corners from the damaged area.
6. Apply a chemical conversion coating to the edges of initial and repair parts.
7. Apply BMS 5-95 sealant to the patch plate and filler assembly as given in AMM 51-30-0.
8. Make a mating surface seal between the patch plate and the skin as given in SRM 53-30-4. Install the plate.
9. Apply the initial finish again as given in AMM 51-21-0.
10. This repair can be replaced with the repair given in SRM 55-10-3, Figure 8.

## NOTES

- THIS REPAIR, IF INSTALLED OVER THE FRONT OR REAR SPAR-TO-SKIN ATTACHMENT FASTENERS, COULD HAVE AN EFFECT ON SSI NUMBER E-17 OR E-18 AS GIVEN IN SRM 51-00-4, FIG. 3. IF THE REPAIR INTERFERES WITH SSID INSPECTIONS, REPLACE WITH A FLUSH REPAIR. NO CHANGE TO THE SUPPLEMENTAL STRUCTURAL INSPECTION DOCUMENT (SSID) INSPECTION PROGRAM IS NECESSARY.
- WHEN YOU DO THIS REPAIR, REFER TO:
  - SRM 51-10-2 FOR METAL PROTECTIVE TREATMENT
  - SRM 51-30 FOR FASTENER CODE, REMOVAL AND INSTALLATION, HOLE SIZES AND EDGE MARGINS
  - SRM 51-70 FOR AERODYNAMIC SMOOTHNESS REQUIREMENTS
  - SRM 53-30-4 FOR FAYING SURFACE SEALING
  - SRM 55-10-4, FIGURE 1 FOR RIB CHORD REPAIR.

[A] SPACING AS RIB CHORD SKIN FASTENER

## FASTENER SYMBOLS

+ INITIAL FASTENER LOCATIONS

✦ REPAIR FASTENER LOCATIONS

| REPAIR MATERIAL | | | |
| --- | --- | --- | --- |
| PART | | QTY | MATERIAL |
| [1] | FILLER | 1 | 0.050 INCH THICK CLAD 2024-T3 |
| [2] | PLATE | 1 | 0.071 INCH THICK CLAD 2024-T3 |

Horizontal Stabilizer Interspar Skin Across Rib External Repair
Figure 7 (Sheet 1)


BOEING PROPRIETARY - Copyright © - Unpublished Work - See title page for details.

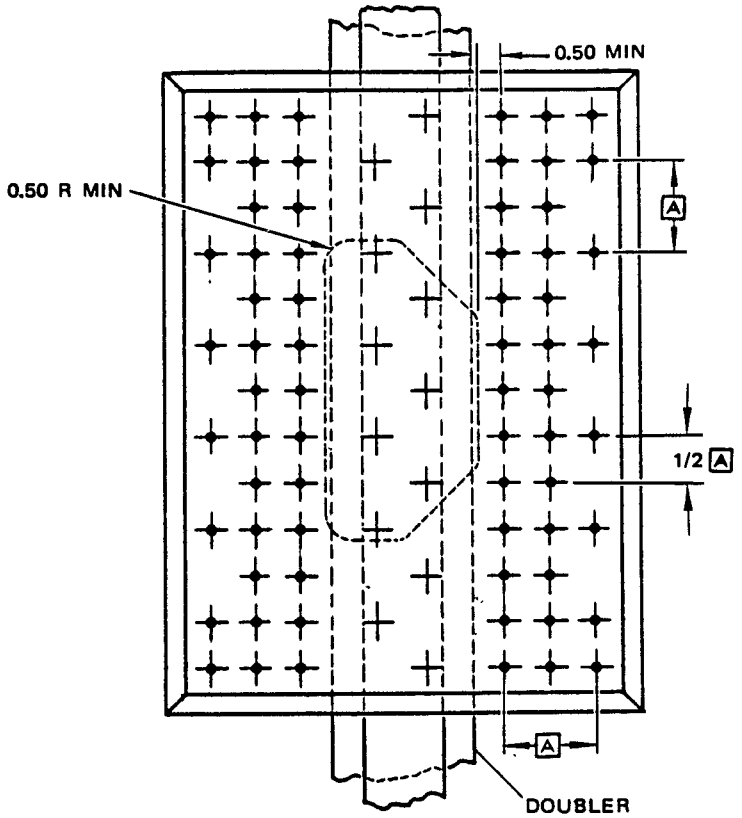


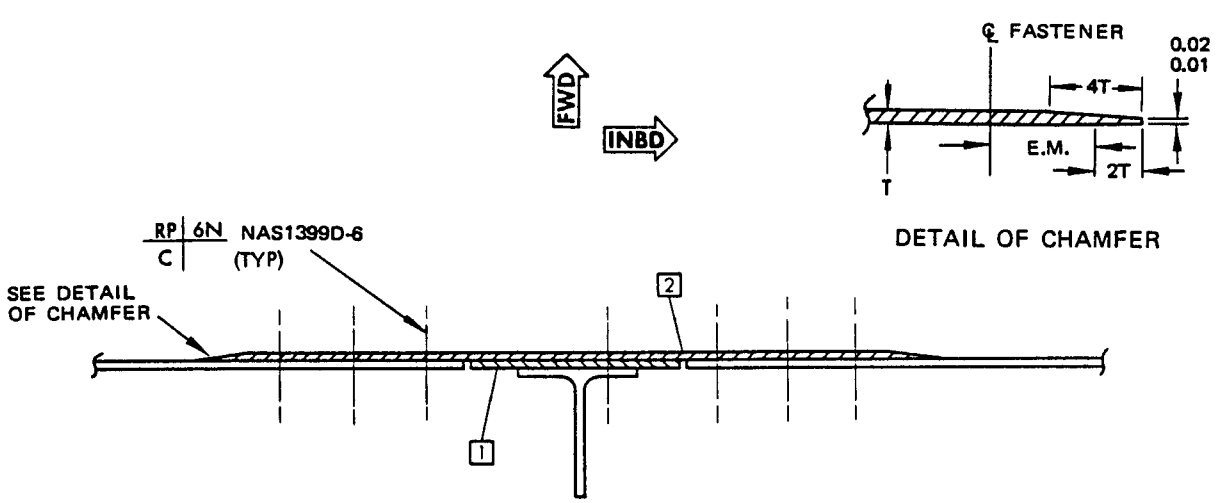


SECTION THROUGH REPAIR
EXPANDED FOR CLARITY

Horizontal Stabilizer Interspar Skin Across Rib External Repair
Figure 7 (Sheet 2)

## APPLICABILITY

THIS REPAIR IS APPLICABLE TO RIB AREAS OUTBOARD OF STABILIZER STATION 83.50.

## REPAIR INSTRUCTIONS

1. Remove the stabilizer leading edge and inspar skin fasteners along the spars and ribs. Roll the skin back as necessary to gain access to the damaged area.
2. If an external repair was installed before, drill out the fasteners and remove the external plate. Remove all the sealant material and then do steps 3 through 15.
3. Remove the damaged skin and doubler on each side and across the damaged skin. Make the cut in the shape of a rectangle with the sides parallel to the rib.
4. Find the amount of damage to the rib chord and drill out the initial rivets as necessary.
5. Cut the damaged rib chord. Make sure that you leave the necessary clearance to install the doubler plate.

   Note: Do not cut the skin.
6. Put all the indented skin back to the initial contour.
7. Make the necessary repair parts.
8. Assemble the repair parts.
9. Drill the fastener holes.
10. Disassemble the repair parts.
11. Remove all nicks, scratches, burrs, and sharp edges from the initial and repair parts.
12. Apply a chemical conversion coating to the repair parts and the cut edges of the initial parts. Refer to SRM 51-10-2.
13. Prepare the inner surface of the skin and doubler plate part [1] for bonding as given in SRM 51-40-5.
14. Install part [1] but do not install the fasteners through the rib chord.
15. Bond the rib chord repair parts to the initial chord.
16. Prepare part [2] for bonding and install it along with the remaining fasteners.
17. Fill the skin gap with BMS 5-95 sealant as given in SRM 51-70.
18. Apply the finish as given in AMM 51-21.

## NOTES

- THIS REPAIR COULD HAVE AN EFFECT ON A STRUCTURALLY SIGNIFICANT ITEM (SSI) GIVEN IN SRM 51-00-4, FIG. 3. BUT, NO CHANGE TO THE SUPPLEMENTAL STRUCTURAL INSPECTION DOCUMENT (SSID) INSPECTION PROGRAM IS NECESSARY.
- WHEN YOU DO THIS REPAIR, REFER TO:
  - SRM 51-10-2 FOR METAL PROTECTIVE TREATMENT
  - SRM 51-30 FOR FASTENER CODE, REMOVAL AND INSTALLATION, HOLE SIZES AND EDGE MARGINS
  - SRM 51-70 FOR AERODYNAMIC SMOOTHNESS REQUIREMENTS
  - SRM 55-10-4, FIGURE 1 FOR RIB CHORD REPAIR ONLY.

[A] SAME SPACING AS RIB CHORD SKIN FASTENERS.

## FASTENER SYMBOLS

+ INITIAL FASTENER LOCATIONS.

✦ REPAIR FASTENER LOCATIONS.

Horizontal Stabilizer Interspar Skin Across Rib - Flush Repair
Figure 8 (Sheet 1 of 3)


BOEING PROPRIETARY - Copyright © - Unpublished Work - See title page for details.

| REPAIR MATERIAL | | | | | |
|---|---|---|---|---|---|
| LOCATION STABILIZER STATION → | | 92.70, 101.90, 120.30, 129.50 138.70, 147.90, 157.10 175.50, 184.70, 193.90, 203.10 212.30, 230.70, 239.90, 249.10 | | 83.50, 111.10, 166.30, 221.30, 258.28 | |
| PART | | QTY | MATERIAL | QTY | MATERIAL |
| 1 | PLATE | 1 | .050 CLAD .2024-T3 | 1 | .071 CLAD 2024-T3 |
| 2 | FILLER | 1 | .050 CLAD 2024-T3 | 1 | .050 CLAD 2024-T3 |
| 3 | FILLER | 1 | .050 CLAD 2024-T3 | 1 | .071 CLAD 2024-T3 |
| 4 | ANGLE | 2 | .050 CLAD 7075-0 HT T6 | 2 | .071 CLAD 7075-0 HT T6 |
| 5 | FILLER | 1 | .010 CLAD 2024-T3 | 1 | .010 CLAD 2024-T3 |
| 6 | FILLER | 1 | .010 CLAD 2024-T3 | 1 | .010 CLAD 2024-T3 |



Horizontal Stabilizer Interspar Skin Across Rib - Flush Repair
Figure 8 (Sheet 2 of 3)

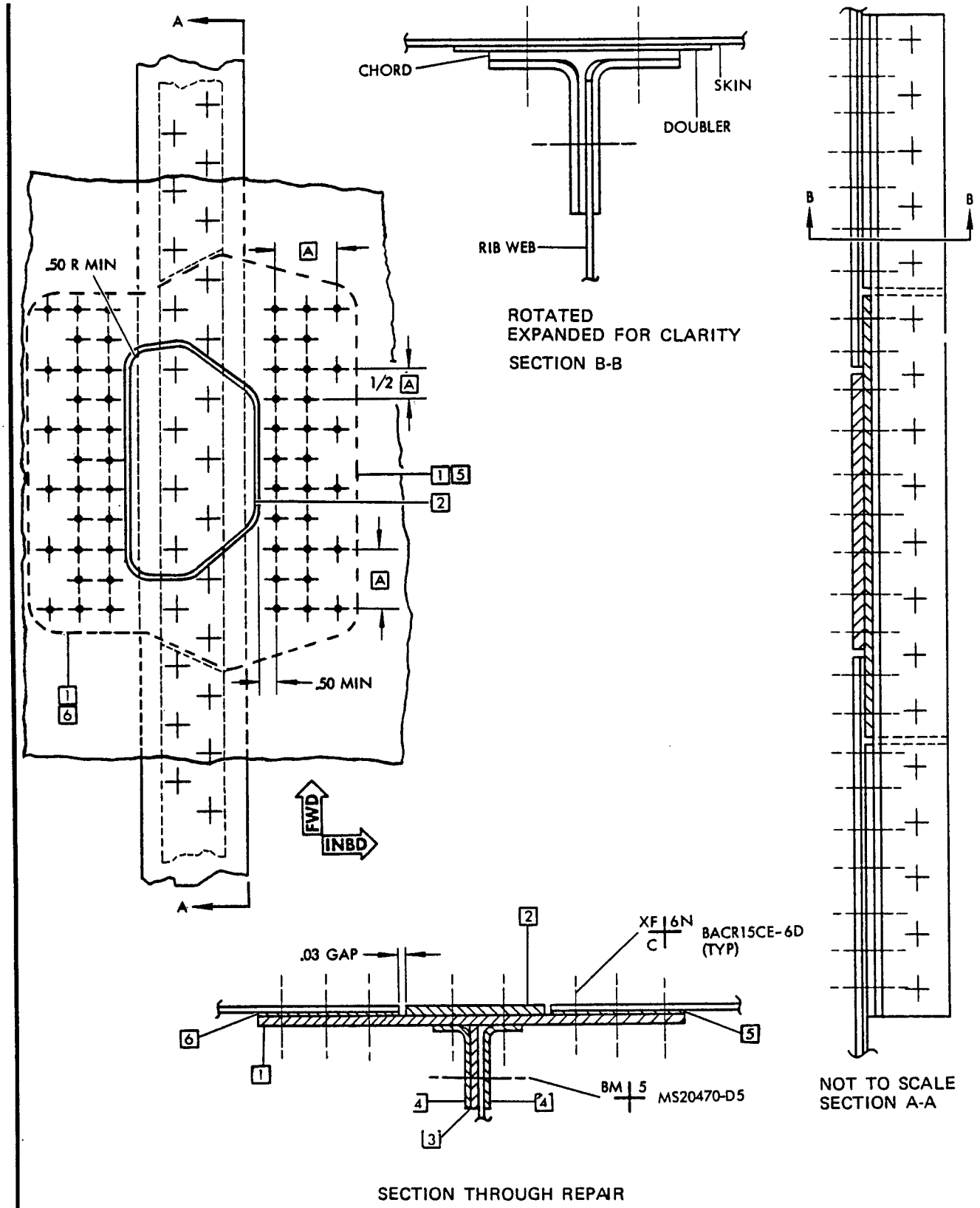


Horizontal Stabilizer Interspar Skin Across Rib - Flush Repair
Figure 8 (Sheet 3 of 3)

| APPLICABILITY |
| --- |
| THIS INSTALLATION IS APPLICABLE TO THE LOWER PANELS OF THE HORIZONTAL STABILIZER FROM STAB. STA 83.50 TO 295.10.<br><br>IF IT IS NECESSARY TO DO THIS INSTALLATION ON AN UPPER PANEL, YOU MUST GO TO THE BOEING COMPANY FOR MORE INSTRUCTIONS. |

## INSTALLATION INSTRUCTIONS

1. Cut the hole in the skin. Refer to Detail I. [A]
2. Remove the fasteners from the rib chords as necessary to install the access door.
3. Make the parts for the installation. Refer to Table I.
4. Put the parts into position and drill all of the fastener holes except for those that go through parts 1 and 2 at the nutplate locations.
5. Remove the parts for the installation.
6. Remove all of the nicks, scratches, gouges, burrs and sharp edges from the skin and the parts for the installation.
7. Apply Alodine to the repair parts. Refer to 51-10-2.
8. Apply one layer of BMS 10-79, Type II primer to the parts for the installation. Refer to 51-21 of the Maintenance Manual.
9. Install parts 2 and 3 (or 3,4, and 5, as applicable) with BMS 5-95 between the faying surfaces. Install the fasteners, except for the fasteners at the nutplate locations. Install the fasteners wet with BMS 5-95 sealant.
10. Put part 1 into position and drill the 0.190-0.199 holes through parts 1 and 2.
11. Remove part 1.
12. Put the nutplates into position and drill the rivet holes.
13. Remove the nutplates.
14. Remove all of the nicks, scratches, gouges, burrs and sharp edges from the edges of the fastener holes.
15. Apply Alodine to the edges of the fastener holes. Refer to 51-10-2.
16. Apply one layer to BMS 10-79, Type II primer to the edges of the fastener holes. Refer to 51-21 of the Maintenance Manual.
17. Install the nutplates with BACR15BA3D rivets.
18. Apply BMS 10-86, Type I, white abrasion resistant coating to the faying surfaces of parts 1 and 2.
19. Install part 1 with BMS 5-95 sealant between the faying surfaces. Refer to 51-20-4.
20. Intall the BACB30EL3-() bolts wet with BMS 5-95 sealant.
21. Fill the gap on the outer surface with BMS 5-95 sealant. Refer to 51-20-4.
22. Apply the finish to the installation. Refer to 51-21 of the Maintenance Manual.

Horizontal Stabilizer Access Panel Installation
Figure 9 (Sheet 1)

## NOTES

- THIS REPAIR WILL NOT HAVE AN EFFECT ON A STRUCTURALLY SIGNIFICANT ITEM (SSI) GIVEN IN SRM 51-00-4, FIG. 3. THUS, NO CHANGE TO THE SUPPLEMENTAL STRUCTURAL INSPECTION DOCUMENT (SSID) INSPECTION PROGRAM IS NECESSARY.
- WHEN YOU DO THIS REPAIR, REFER TO:
  - AMM 51-21 FOR INTERIOR AND EXTERIOR FINISHES
  - SOPM 20-44-01 FOR APPLICATION OF ABRASION RESISTANT FINISHES
  - SRM 51-10-1 FOR INVESTIGATION AND CLEANUP OF DAMAGE
  - SRM 51-10-2 FOR PROTECTIVE TREATMENT OF METAL
  - SRM 51-20-4 FOR SEALING OF REPAIRS
  - SRM 51-30 FOR FASTENER CODE, REMOVAL, INSTALLATION, HOLE SIZES, AND EDGE MARGINS
  - SRM 51-70 FOR AERODYNAMIC SMOOTHNESS REQUIREMENTS.

[A] USE DETAIL II ONLY IF THERE IS NOT SUFFICIENT SPACE TO PUT REPAIR PART 2 THROUGH THE CUTOUT IN ONE PIECE.

[B] USE REPAIR PARTS 4 AND 5 (DETAIL II) ONLY IF THERE IS NOT SUFFICIENT SPACE TO PUT REPAIR PART 2 (DETAIL I) THROUGH THE CUTOUT IN ONE PIECE.

[C] FOR STATION 83.50 THRU 138.70, THE SPACING IS 0.65 INCH. FOR STATION 138.70 THRU 295.10, THE SPACING IS 0.80 INCH.

[D] RADIUS THE END OF THE REPAIR PLATE TO NEST IN THE RADIUS OF THE RIB CHORD.

## FASTENER SYMBOLS

+ INITIAL FASTENER LOCATION. INSTALL THE SAME TYPE AND SIZE FASTENER AS THE INITIAL FASTENER.

REPAIR FASTENER LOCATION. INSTALL A BACR15BB5D RIVET.

NUTPLATE AND REPAIR FASTENER LOCATION. INSTALL A BACN10JR3 NUTPLATE WITH TWO BACR15BA3D RIVETS. INSTALL A BACB30EL3-() BOLT TO ATTACH REPAIR PART 1.

REPAIR FASTENER LOCATION. INSTALL THIS FASTENER ONLY IF THE ACCESS PANEL LOCATION IS BETWEEN STATION 83.50 AND STATION 111.10. INSTALL THE SAME TYPE AND SIZE FASTENER AS THE INITIAL FASTENERS THROUGH THE RIB CHORD.

| REPAIR MATERIAL | | | |
|---|---|---|---|
| PART | | QTY | MATERIAL |
| 1 | COVER PLATE | 1 | 0.050 INCH THICK CLAD 2024-T3 |
| 2 [B] | DOUBLER | 1 | 0.050 INCH THICK CLAD 2024-T3 |
| 3 | SHIM | 1 | 0.010 INCH THICK 2024-T3 |
| 4 [B] | SPLICE | 2 | 0.050 INCH THICK CLAD 2024-T3 |
| 5 [B] | DOUBLER | 2 | 0.050 INCH THICK CLAD 2024-T3 |

TABLE I

Horizontal Stabilizer Access Panel Installation
Figure 9 (Sheet 2)


BOEING PROPRIETARY - Copyright © - Unpublished Work - See title page for details.

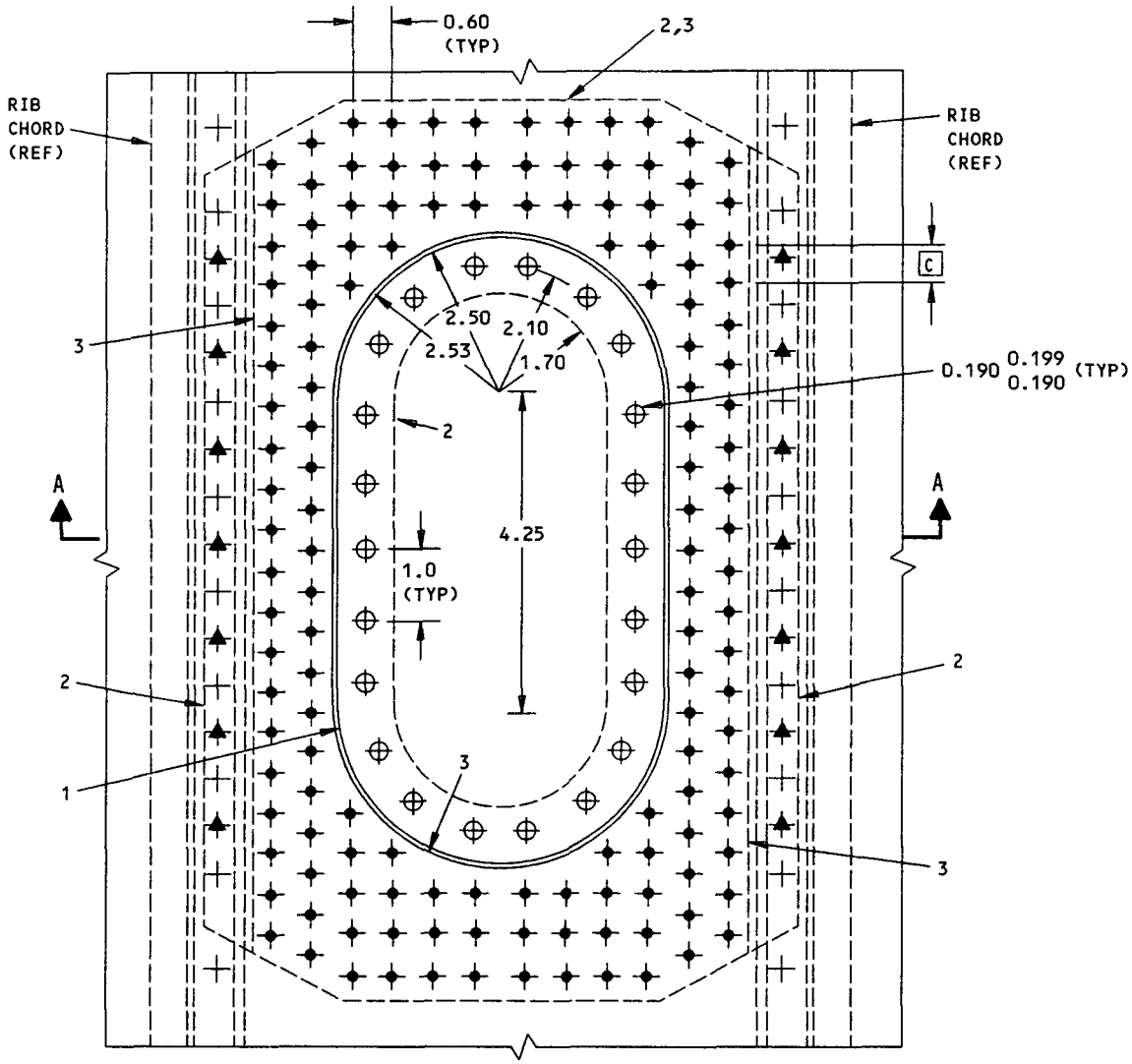


DETAIL I A

Horizontal Stabilizer Access Panel Installation
Figure 9 (Sheet 3)


BOEING PROPRIETARY - Copyright © - Unpublished Work - See title page for details.

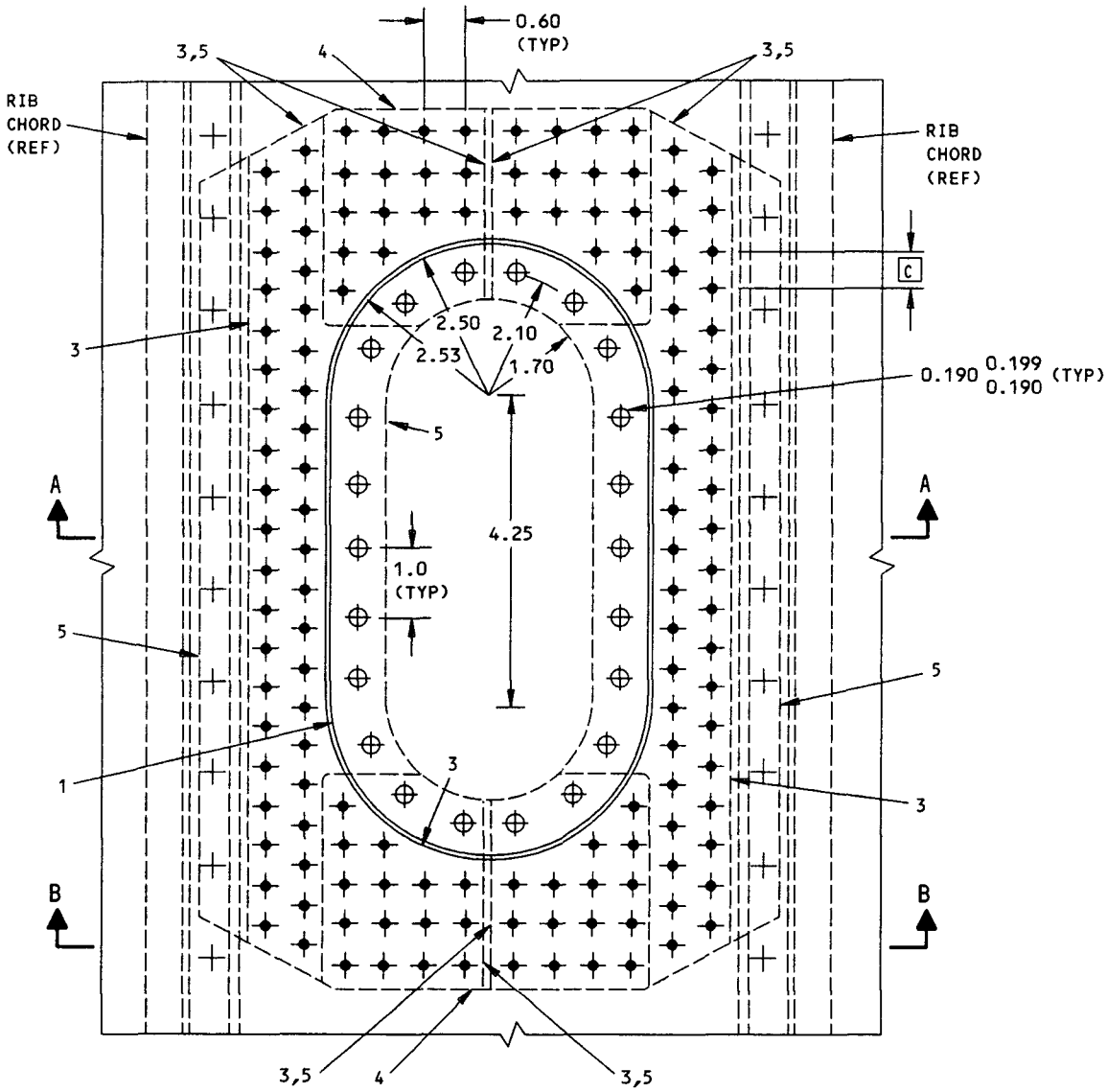


DETAIL II

Horizontal Stabilizer Access Panel Installation
Figure 9 (Sheet 4)



BOEING PROPRIETARY - Copyright © - Unpublished Work - See title page for details.

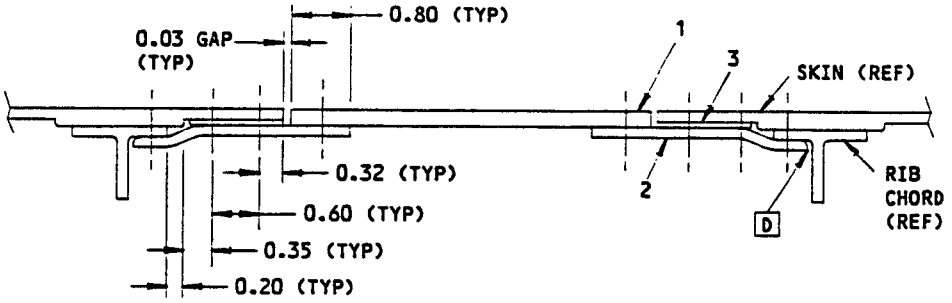


SECTION A-A

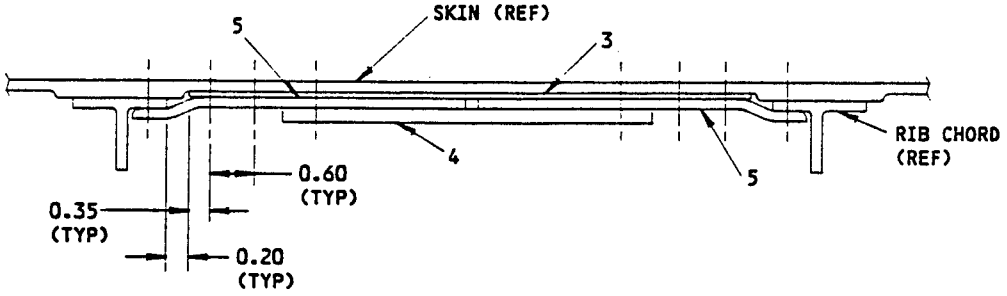


SECTION B-B

Horizontal Stabilizer Access Panel Installation
Figure 9 (Sheet 4A)

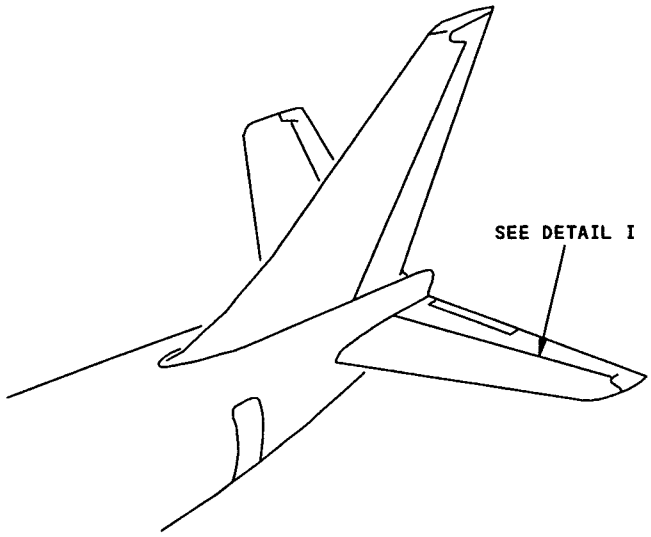


NOTES

- THESE REPAIRS WILL NOT HAVE AN EFFECT ON A STRUCTURALLY SIGNIFICANT ITEM (SSI) GIVEN IN SRM 51-00-4, FIG. 3. THUS, NO CHANGE TO THE SUPPLEMENTAL STRUCTURAL INSPECTION DOCUMENT (SSID) INSPECTION PROGRAM IS NECESSARY.
- THIS FIGURE IS APPLICABLE TO AIRPLANES WITH HORIZONTAL STABILIZERS THAT ARE PRIMARILY METAL, BUT HAVE FIBERGLASS/ARAMID/GRAPHITE/EPOXY TRAILING EDGE SKIN PANELS.
- REFER TO SRM 55-10-2 FOR THE EFFECTIVITY OF METAL STABILIZERS WITH GLASS/ARAMID/GRAPHITE/EPOXY TRAILING EDGE PANELS.
- REFER TO TABLES I AND II FOR REPAIR DATA.

Repairs to Horizontal Stabilizer Glass/Aramid/Graphite/Epoxy Composite Trailing Edge Panels (Metal Stabilizer)
Figure 10 (Sheet 1)


BOEING PROPRIETARY - Copyright © - Unpublished Work - See title page for details.

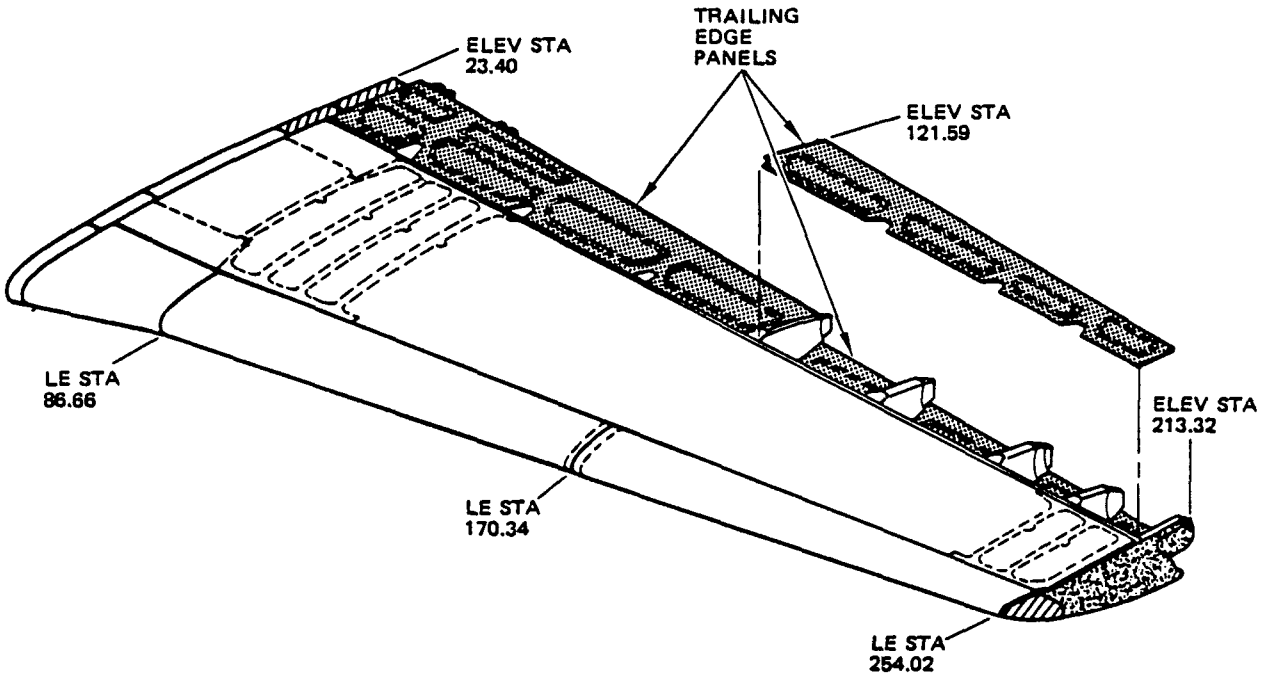


DETAIL I

Repairs to Horizontal Stabilizer Glass/Aramid/Graphite/Epoxy
Composite Trailing Edge Panels (Metal Stabilizer)
Figure 10 (Sheet 2)

| DAMAGE | INTERIM REPAIRS [B] | PERMANENT REPAIRS | | |
|---|---|---|---|---|
| | WET LAYUP ROOM TEMP (51-40-12) | WET LAYUP 150°F CURE (51-40-12) | WET LAYUP 200°F CURE (51-40-15) | 250°F CURE (51-40-13) |
| HOLES | 2.0 MAX DIA NOT TO EXCEED 30% OF SMALLEST DIMENSION ACROSS HONEYCOMB PANEL AT THE DAMAGE LOCATION. REPAIR PER 51-40-12, REPAIR 14. [A] | 6.0 MAX DIA NOT TO EXCEED 50% OF SMALLEST DIMENSION ACROSS HONEYCOMB PANEL AT THE DAMAGE LOCATION. USE TWO EXTRA PLIES PER FACESHEET REPAIRED [C] | 6.0 MAX DIA NOT TO EXCEED 50% OF SMALLEST DIMENSION ACROSS HONEYCOMB PANEL AT THE DAMAGE LOCATION. USE TWO EXTRA PLIES PER FACESHEET REPAIRED [C] | NO SIZE LIMIT |
| CRACKS | UP TO 6.0 INCHES LONG, REPAIR PER 51-40-12, REPAIR 14. [A] | USE SAME LIMITS AND REQUIREMENTS AS FOR HOLES | | |
| DELAMINATION | USE SAME LIMITS AS FOR HOLES AND REPAIR PER 51-40-12, REPAIR 14. [A] | USE SAME LIMITS AND REQUIREMENTS AS FOR HOLES | | |
| NICKS AND GOUGES | IF FIBER DAMAGE OR DELAMINATION EXISTS, USE SAME LIMITS AS FOR HOLES AND REPAIR PER 51-40-12, REPAIR 14. [A] | IF THERE IS NO FIBER DAMAGE OR DELAMINATION, FILL NICKS OR GOUGES PER 51-40-12.<br><br>IF FIBER DAMAGE OR DELAMINATION EXISTS, USE SAME LIMITS AND REQUIREMENTS AS FOR HOLES | | |
| DENTS | USE SAME LIMITS AS FOR HOLES AND REPAIR PER 51-40-12, REPAIR 14. [A] | UP TO 2.0 IN. DIA WITH NO FIBER DAMAGE OR DELAMINATION, REPAIR PER 51-40-12, REPAIR 12. [C]<br><br>IF OVER 2.0 IN. DIA OR WITH FIBER DAMAGE OR DELAMINATION, USE SAME LIMITS AND REQUIREMENTS AS FOR HOLES | | |

REPAIR DATA FOR 250°F CURE HONEYCOMB PANELS
TABLE I

Repairs to Horizontal Stabilizer Glass/Aramid/Graphite/Epoxy
Composite Trailing Edge Panels (Metal Stabilizer)
Figure 10 (Sheet 3)

NOTES

- REFINISH REWORKED AREAS PER 51-20 OF THE MAINTENANCE MANUAL
- REFER TO 51-70 FOR AERODYNAMIC SMOOTHNESS REQUIREMENTS. WHERE THE DAMAGE EXCEEDS THE LIMITS SHOWN IN 51-70, CONSIDERATION SHOULD BE GIVEN TO THE LOSS OF PERFORMANCE INVOLVED
- WHERE NO REPAIR IS SPECIFIED, USE THE REPAIR INDEX IN THE APPROPRIATE REPAIR SECTION OF 51-40 TO DETERMINE THE REPAIR TO BE USED
- REFER TO 51-40 FOR INVESTIGATION AND CLEANUP OF DAMAGE

[A] LIMITED TO REPAIR OF DAMAGE TO ONE FACESHEET SKIN AND HONEYCOMB CORE. ONE REPAIR PER SQUARE FOOT OF AREA AND MINIMUM OF 6.0 INCHES (EDGE TO EDGE) FROM ANY OTHER DAMAGE (ON EITHER SIDE OF PANEL), FASTENER HOLE, OR EDGE OF PANEL

[B] INSPECT INTERIM REPAIR USING NDI METHODS PER 51-40-12 EVERY AIRPLANE "2A" CHECK. PERMANENT REPAIR IS REQUIRED IF ANY DETERIORATION IS EVIDENT. THESE REPAIRS HAVE FAA APPROVAL CONTINGENT ON ACCOMPLISHMENT OF THE INSPECTIONS AT THE REQUIRED INTERVALS

[C] ONE REPAIR PER SQUARE FOOT OF AREA AND A MINIMUM OF 3.0 INCHES (EDGE TO EDGE) FROM ANY OTHER DAMAGE (ON EITHER SIDE OF PANEL), FASTENER HOLE, OR EDGE OF PANEL

Repairs to Horizontal Stabilizer Glass/Aramid/Graphite/Epoxy
Trailing Edge Panels (Metal Stabilizer)
Figure 10 (Sheet 4)

| DAMAGE | INTERIM REPAIRS [B] | PERMANENT REPAIRS | |
|---|---|---|---|
| | WET LAYUP ROOM TEMP (51-40-12) | WET LAYUP 200°F CURE (51-40-15) | 250°F CURE (51-40-13) |
| HOLES | REPAIR DAMAGE TO FASTENER HOLES PER 51-40-12, REPAIR 9<br><br>FOR ALL OTHER DAMAGE UP TO 15% OF CROSS-SECTIONAL AREA THRU THE EDGE-BAND OR 10% OF THE EDGEBAND LENGTH PER AF-FECTED SIDE, REPAIR PER 51-40-12, REPAIR 7 | REPAIR DAMAGE TO FAST-ENER HOLES PER 51-40-15, REPAIR 9<br><br>FOR ALL OTHER DAMAGE, REPAIR PER 51-40-15, REPAIR 7 | REPAIR DAMAGE TO FASTENER HOLES PER 51-40-13, REPAIR 9<br><br>FOR ALL OTHER DAMAGE, REPAIR PER 51-40-13, REPAIR 7 |
| DELAMI-NATION | IF DELAMINATION FROM PANEL EDGE IS NO LESS THAN 2D FROM ANY FAST-ENER HOLE, REPAIR PER 51-40-12, REPAIR 6<br><br>FOR ANY OTHER DELAMINATION, USE SAME LIMITS AND REPAIRS AS FOR HOLES | USE SAME REPAIRS AS FOR HOLES | |
| CRACKS | USE SAME LIMITS AND REPAIRS AS FOR HOLES | USE SAME REPAIRS AS FOR HOLES | |

REPAIR DATA FOR EDGEBANDS OF 250°F CURE HONEYCOMB PANELS
TABLE II (CONT)

Repairs to Horizontal Stabilizer Glass/Aramid/Graphite/Epoxy
Composite Trailing Edge Panels (Metal Stabilizer)
Figure 10 (Sheet 5)

| DAMAGE | INTERIM REPAIRS [B] | PERMANENT REPAIRS | |
|---|---|---|---|
| | WET LAYUP ROOM TEMP (51-40-12) | WET LAYUP 200°F CURE (51-40-15) | 250°F CURE (51-40-13) |
| NICKS AND GOUGES | IF FIBER DAMAGE EXISTS, USE SAME LIMITS AND REPAIRS AS FOR HOLES | IF THERE IS NO FIBER DAMAGE OR DELAMINATION, FILL NICKS OR GOUGES PER 51-40-12. | |
| | IF DELAMINATION EXISTS, USE SAME LIMITS AND REPAIRS AS FOR DELAMINATION | IF FIBER DAMAGE OR DELAMINATION EXISTS, USE SAME REPAIRS AS FOR HOLES | |
| DENTS | IF FIBER DAMAGE EXISTS, USE SAME LIMITS AND REPAIRS AS FOR HOLES | IF THERE IS NO FIBER DAMAGE OR DELAMINATION, REPAIR PER 51-40-12, REPAIR 12 | |
| | IF DELAMINATION EXISTS, USE SAME LIMITS AND REPAIRS AS FOR DELAMINATION | IF FIBER DAMAGE OR DELAMINATION EXISTS, USE SAME REPAIRS AS FOR HOLES | |

REPAIR DATA FOR EDGEBANDS OF 250°F CURE HONEYCOMB PANELS
TABLE II

NOTES

- D = FASTENER DIAMETER

Repairs to Horizontal Stabilizer Glass/Aramid/Graphite/Epoxy
Composite Trailing Edge Panels (Metal Stabilizer)
Figure 10 (Sheet 6)

## APPLICABILITY

THIS REPAIR IS APPLICABLE FOR ALL RIB CHORD REPAIRS.

## REPAIR INSTRUCTIONS

1. Remove the leading edge skin panels of interspar skin access doors, as necessary.
2. Remove the skin attachment rivets along the front spar and rib flanges, as necessary.
3. Rework or remove the damage. Use one of the procedures given in (a) through (c), and continue to do steps 4 through 14.
   (a) If only the flanges are damaged, cut out the damaged area of the flanges, as necessary.
   (b) If only crack damage is found, drill a 0.25 inch diameter stop hole at the ends of the cracks that do not end at a fastener hole.
   (c) If (a) or (b) can not be used, cut out the damaged chord and replace it with a filler section as shown.
4. Remove the rib chord fasteners as necessary.
5. Make the repair parts.
6. Assemble the repair parts.
7. Drill the fastener holes. Use the initial hole locations in the rib chord.
8. Disassemble the repair parts.
9. Remove all nicks, scratches, burrs, and sharp edges from the initial and repair parts.
10. Apply a chemical conversion coating to the repair parts and the cut edges of the initial parts as given in SRM 51-10-2.
11. Install the repair parts with BMS 5-95 sealant between the mating surfaces. Refer to SRM 51-20-4.
12. Install the fasteners.
13. Replace the removed skins and install the skin attachment fasteners.
14. Apply the finish as given in AMM 51-21.

## NOTES

- THIS REPAIR WILL NOT HAVE AN EFFECT ON A STRUCTURALLY SIGNIFICANT ITEM (SSI) GIVEN IN SRM 51-00-4, FIG. 3. THUS, NO CHANGE TO THE SUPPLEMENTAL STRUCTURAL INSPECTION DOCUMENT (SSID) INSPECTION PROGRAM IS NECESSARY.
- WHEN YOU DO THIS REPAIR, REFER TO:
  - SRM 51-10-2 FOR METAL PROTECTIVE TREATMENT
  - SRM 51-20-4 FOR REPAIR SEALING
  - SRM 51-30 FOR FASTENER CODE, REMOVAL AND INSTALLATION, HOLE SIZES AND EDGE MARGINS.
- THE NUMBER OF FASTENERS SHOWN ARE THE MINIMUM NUMBER OF FASTENERS NEEDED IN EACH ROW ON EACH SIDE OF THE REPAIR.

[A] PART [3] IS OPTIONAL TO [4] AND [5].

[B] BAC1505-100583 IS OPTIONAL FOR STABILIZER STATION 213.3.

[C] PART IS ONLY NECESSARY WHERE TRANSVERSE RIB HAS TO BE ALTERED TO SUIT REPAIR TO INTERSPAR RIB.

## FASTENER SYMBOLS

+ INITIAL FASTENER LOCATIONS.

Horizontal Stabilizer Interspar Rib Repair
Figure 1 (Sheet 1 of 3)


BOEING PROPRIETARY - Copyright © - Unpublished Work - See title page for details.

| REPAIR MATERIAL | | | | | | | |
|---|---|---|---|---|---|---|---|
| LOCATION → | | STAB STA 83.5 | | STAB STA 92.7, 101.9 120.3 thru 157.7 175.5 thru 249.1 | | STAB STA 111.1 166.3 213.32 | |
| | PART | QTY | MATERIAL | QTY | MATERIAL | QTY | MATERIAL |
| 1 | ANGLE | 1 | .080 CLAD 7075-0 HT T6 | 1 | .063 CLAD 7075-0 HT T6 | 1 | .080 CLAD 7075-0 HT T6 |
| 2 | ANGLE | 1 | .080 CLAD 7075-0 HT T6 | 1 | .063 CLAD 7075-0 HT T6 | 1 | .080 CLAD 7075-0 HT T6 |
| 3 | FILLER | 1 | BAC1505-100557 7075-T6 | 1 | BAC1505-100556 7075-T6 | 1 | BAC1505-100557 7075-T6 B |
| 4 | FILLER | 1 | .071 CLAD 7075-T6 | 1 | .050 CLAD 7075-T6 | 1 | .071 CLAD 7075-T6 |
| 5 | FILLER | 1 | .071 CLAD 7075-T6 | 1 | .050 CLAD 7075-T6 | 1 | .071 CLAD 7075-T6 |
| 6 | ANGLE | 1 | .063 CLAD 7075-T6 | | | | |
| 7 | ANGLE | 1 | .063 CLAD 7075-T6 | | | | |
| 8 | FILLER | 2 | .100 CLAD 7075-T6 | | | | |
| 9 | FILLER | 1 | .080 CLAD 7075-T6 | 1 | .063 CLAD 7075-T6 | 1 | .08 CLAD 7075-T6 |
| 10 | FILLER | 1 | .050 CLAD 7075-T6 | | | | |
| ROW X | RIVET | 4 | BACR15CE-D5 | 4 | BACR15CE-D5 | 4 | BACR15CE-D5 |
| ROW Y | RIVET | 4 | BACR15CE-D5 | 4 | BACR15CE-D5 | 4 | BACR15CE-D5 |
| ROW Z | RIVET | 4 | MS20470 D5 | 4 | MS20470D5 | 4 | MS20470D5 |

Horizontal Stabilizer Interspar Rib Repair
Figure 1 (Sheet 2 of 3)

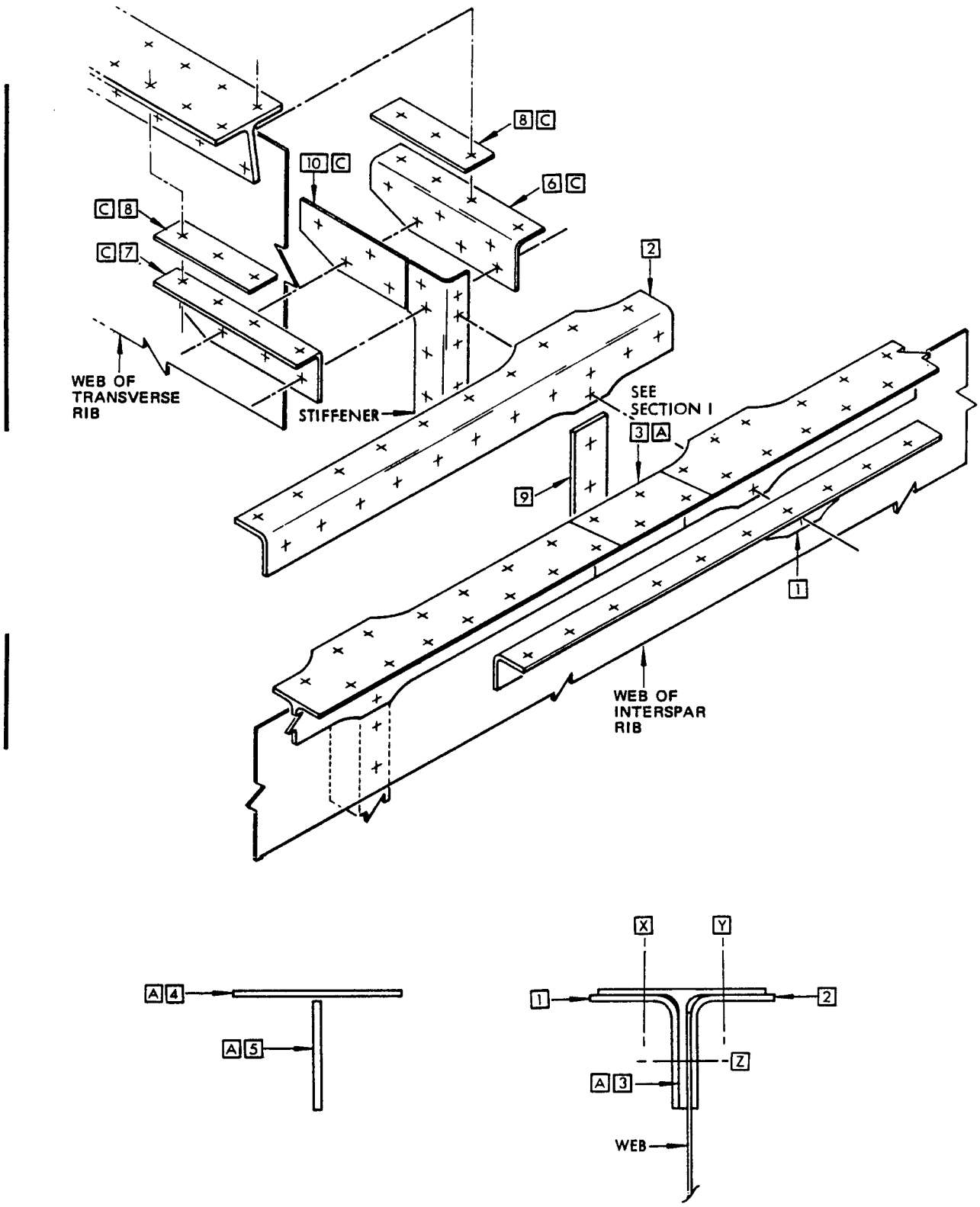


SECTION I



Horizontal Stabilizer Interspar Rib Repair
Figure 1 (Sheet 3 of 3)

| APPLICABILITY |
| --- |
| THIS REPAIR IS APPLICABLE FOR ALL RIB WEBS. |

## REPAIR INSTRUCTIONS

1. Remove the leading edge skin panels, interspar skin access doors or inspar skin as necessary.
2. Remove the inspar skin attachment rivets along the front spar and rib flanges as necessary. Roll back the skin as necessary to gain access to the damage area.
3. Drill a 0.25 inch diameter stop hole at the ends of cracks that do not end at fastener hole, or cut out the damage as shown. If necessary, the flanged area of the web can be fully removed.
4. Remove the web stiffeners and the web fasteners as necessary to install part [1].
5. Make repair plate [1]. If the flanged area of the web has been removed, a clearance hole is not needed in the repair plate.
6. Assemble the repair part.
7. Drill the fastener holes. Drill to align with the initial holes in the web.
8. Disassemble the repair part.
9. Remove all nicks, scratches, burrs, and sharp edges from the initial and repair parts.
10. Bond and rivet part [1] to the rib web as given in SRM 51-40-5. Install the stiffeners at their initial locations.
11. Apply the finish as given in AMM 51-21.
12. Install the skins that were removed, the access panels, the leading edge skins and all the fasteners.
13. Apply the initial finish to the repair area as given in AMM 51-21.

## NOTES

- THIS REPAIR WILL NOT HAVE AN EFFECT ON A STRUCTURALLY SIGNIFICANT ITEM (SSI) GIVEN IN SRM 51-00-4, FIG. 3. THUS, NO CHANGE TO THE SUPPLEMENTAL STRUCTURAL INSPECTION DOCUMENT (SSID) INSPECTION PROGRAM IS NECESSARY.
- WHEN YOU DO THIS REPAIR, REFER TO:
  - SRM 51-10-2 FOR METAL PROTECTIVE TREATMENT
  - SRM 51-30 FOR FASTENER CODE, REMOVAL AND INSTALLATION, HOLE SIZES AND EDGE MARGINS
  - SRM 51-40-5 FOR BONDED METAL STRUCTURAL REPAIR.

[A] USE THE SAME TYPE AND SIZE FASTENER AT THE SAME SPACING AS USED FOR THE CHORD TO WEB ATTACHMENTS.

[B] REPLACE THE INITIAL FASTENER WITH A FASTENER OF THE SAME SIZE AND TYPE USED FOR THE CHORD TO WEB ATTACHMENTS.

[C] USE THE SAME MATERIAL AS THE INTIAL WEB AND AS FOLLOWS:

| INITIAL WEB | REPAIR PART [1] |
| --- | --- |
| SINGLE THICKNESS WEB GAGE | USE THE GAGE EQUAL TO, OR ONE GAGE THICKER |
| BONDED 2-PLY WEB WHERE EACH PLY IS 0.010 INCH THICK | USE SINGLE GAGE OF 0.032 INCH MINIMUM |
| BONDED 2-PLY WEB WHERE EACH PLY IS 0.016 INCH THICK | USE ONE GAGE THICKER THAN THE TOTAL THICKNESS |

[D] MINIMUM EDGE MARGIN AS GIVEN IN SRM 51-30

## FASTENER SYMBOLS

+ INITIAL FASTENER LOCATIONS

✦ REPAIR FASTENER LOCATIONS

Horizontal Stabilizer Interspar Rib Web Repair
Figure 2 (Sheet 1)


BOEING PROPRIETARY - Copyright © - Unpublished Work - See title page for details.

| REPAIR MATERIAL | | | |
|---|---|---|---|
| PART | | QTY | MATERIAL |
| 1 | PLATE | 1 | C |

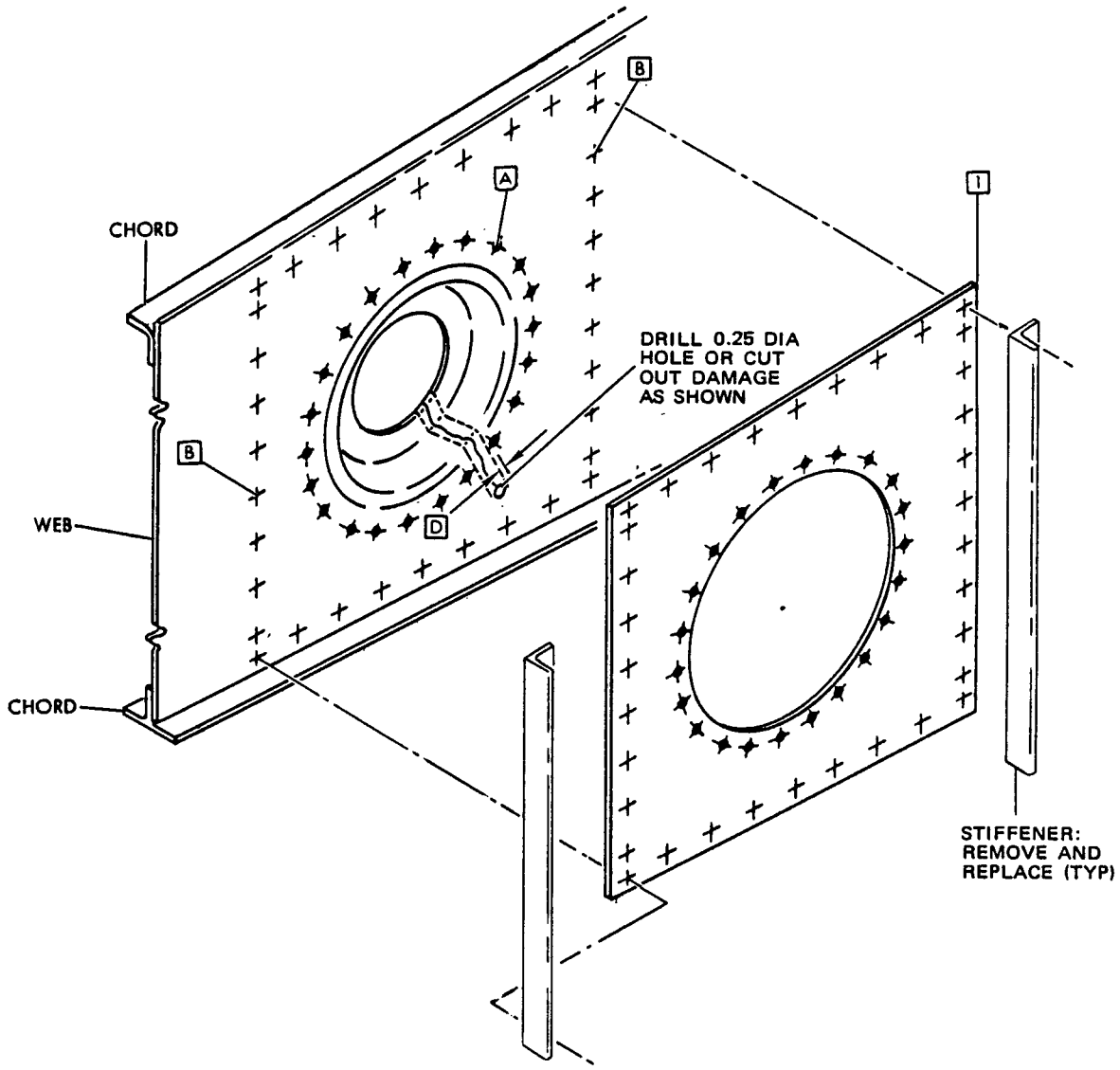




Horizontal Stabilizer Interspar Rib Web Repair
Figure 2 (Sheet 2)

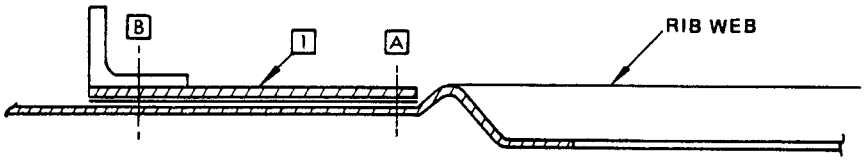


SECTION THROUGH REPAIR

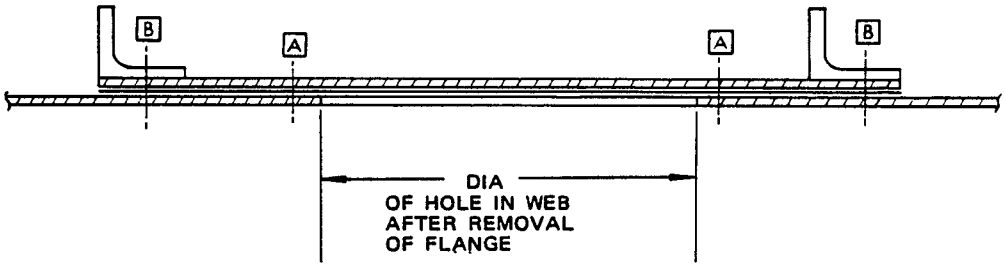


SECTION THROUGH OPTIONAL REPAIR
(SEE STEP 3 AND 6).



Horizontal Stabilizer Interspar Rib Web Repair
Figure 2 (Sheet 3)

## SERVICE BULLETIN REPAIRS - HORIZONTAL STABILIZER SPARS

The following Service Bulletins contain spar repairs which are available for use where specific damage has been encountered. Usually, the Service Bulletin also covers preventive modification data which operators are encouraged to use to eliminate the need for repair.

| DAMAGED AREA | CUM LINE NUMBER EFFECTIVITY [A] | SB NUMBER |
|---|---|---|
| HORIZONTAL STABILIZER - CENTER SECTION REAR SPAR UPPER CHORD | 209 AND ON | 737-55-1034 |
| STABILIZERS - HORIZONTAL STABILIZER - CENTER SECTION REAR SPAR UPPER CHORD INSPECTION, MODIFICATION, REPAIR, AND REPLACEMENT | 1 THRU 208 | 737-55A1031 |

[A] FOR AIRPLANES ON WHICH PREVENTIVE MODIFICATION HAS NOT BEEN ACCOMPLISHED

REPAIR INSTRUCTIONS

CAUTION: CARE MUST BE EXERCISED TO PREVENT SAGGING OF THE STRUCTURE BY SUPPORTING IT IN THE JIG POSITION ACCORDING TO 51-50-1 BEFORE REPAIRS ARE UNDERTAKEN.

1. Remove leading edge skin assembly, access panels or trailing edge panels as required per the Maintenance Manual.

2. If the damaged area cannot be reached by removal of the assemblies as noted in step 1, then remove inspar skin fasteners along ribs and spar chords and roll skin back as required to gain access. Refer to detail II for repair of front spar chords between stabilizer station 92.70 to outboard end. Refer to detail I for repair of rear spar chords between stabilizer station 175.50 to outboard end.

3. Rework or remove damage by choosing any one of the following methods as required and then complete all repair steps as outlined:

   (a) If only the flanges are damaged, then cut out or trim only the damaged portion of the flange as required.

   (b) If the flanges are cracked, then stop drill with 0.25 dia holes at the end of all cracks that do not end in a rivet hole.

   (c) If above methods cannot be used, then cut out the damaged chord and replace with a filler section as illustrated.

4. If front spar web is damaged, install a bonded and riveted repair similar to 55-10-5, Fig. 2. If rear spar web is damaged, refer to 55-10-5, Fig. 3.

5. Remove fasteners and web stiffeners and rework inspar rib chord as required to install repair parts. Refer to 55-10-4 for typical rib chord repair. Remove nutplates as required.

6. Fabricate and form repair parts.

7. Locate and drill fastener holes in repair parts to match original fastener holes in the spar chord.

8. Remove all burrs, nicks, scratches, sharp edges and corners on all repair parts and trimmed original parts.

9. Break all sharp edges and corners with 0.030 radius.

10. Apply metal protective treatment per 51-10-2 to all repair parts and any original parts that have been reworked by cutting or trimming.

11. Install repair parts and all fasteners.

12. Restore original interior finish per Maintenance Manual 51-21-0.

13. Replace all removed skins, panels and access doors using same size and type of fasteners as in original installation. Use fasteners with longer grips when required.

14. Restore original exterior finish per Maintenance Manual 51-21-0.

Horizontal Stabilizer Front and Rear Spar Repair
Figure 1 (Sheet 1)

NOTES

- BREAK SHARP EDGES 0.03 ON ALL REPAIR PARTS AND TRIMMED ORIGINAL PARTS
- REFER TO 51-30 FOR FASTENER CODE, REMOVAL AND INSTALLATION HOLE SIZES AND EDGE MARGINS
- REFER TO 51-10-2 FOR METAL PROTECTIVE TREATMENT

[A] USE REPAIR FILLERS OF SAME MATERIAL AND GAGE AS ORIGINAL CHORD, OR USE MACHINED EXTRUSION SECTION SAME AS ORIGINAL

[B] 1/2 ORIGINAL FASTENER SPACING

[C] EXTEND REPAIR PART [5] BEYOND ENDS OF CRACK TO INCLUDE 3 OR MORE FASTENERS IN EACH FLANGE

[D] REPLACE FASTENERS WITH THE SAME TYPE AND SIZE OF FASTENERS AS ORIGINAL EXCEPT USE LONGER GRIP LENGTHS AS REQUIRED

[E] USE FORMED ANGLE ONE GAGE GREATER THAN CHORD THICKNESS IN REGION OF REPAIR OR USE MACHINED EXTRUSION SECTION SAME AS ORIGINAL

[F] SAME GAGE AS REPAIR ANGLE USED

SYMBOLS

+ ORIGINAL FASTENER LOCATIONS

✦ REPAIR FASTENER LOCATIONS

| LOCATION | TOTAL FASTENERS REQUIRED EACH SIDE OF DAMAGE | | |
|---|---|---|---|
| FRONT SPAR CHORD (STAB. STATIONS) | ROW A BACB30FN6 | ROW B BACB30FN6 | ROW C BACB30FM6 |
| 92.70 TO 175.50 | 10 | 5 | 8 |
| 175.70 TO OUTBD END | 8 | 5 | 4 |

Horizontal Stabilizer Front and Rear Spar Repair
Figure 1 (Sheet 2)

| REPAIR MATERIAL | | | | | |
|---|---|---|---|---|---|
| LOCATION → | | FRONT SPAR CHORD STAB STA 92.70 TO OUTBD END | | REAR SPAR CHORD STAB STA 175.70 TO OUTBD END | |
| PART | | QTY | MATERIAL | QTY | MATERIAL |
| 1 | PLATE | 1 | 7075-T6 A | | |
| 2 | ANGLE | 1 | 7075-T6 E | | |
| 3 | ANGLE | 1 | 7075-T6 E | | |
| 4 | PLATE | 1 | 7075-T6 A | | |
| 5 | ANGLE | | | 1 | 7075-T6 E |
| 6 | FILLER | 1 | A | | |
| 7 | FILLER | 1 | 7075-T6 F | | |
| 8 | FILLER | 1 | A | | |



Horizontal Stabilizer Front and Rear Spar Repair
Figure 1 (Sheet 3)

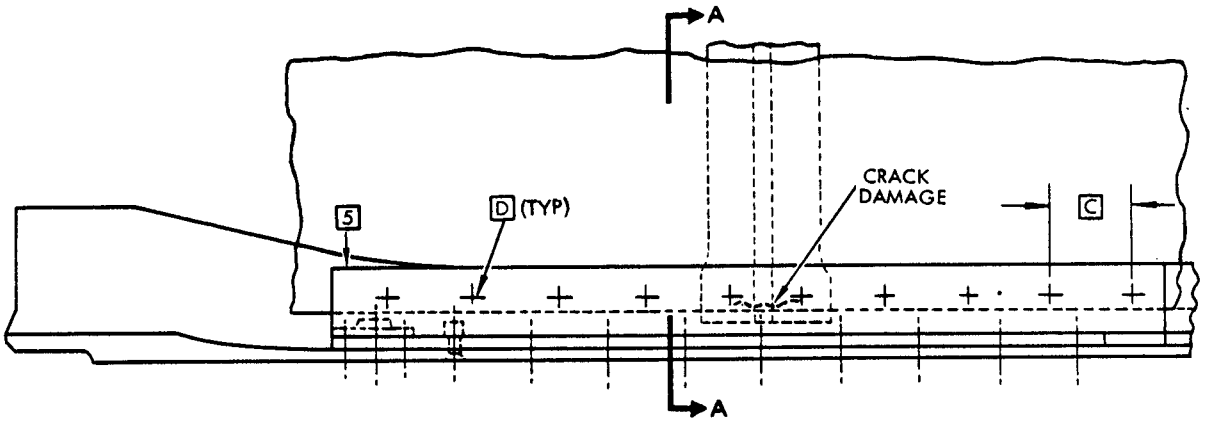


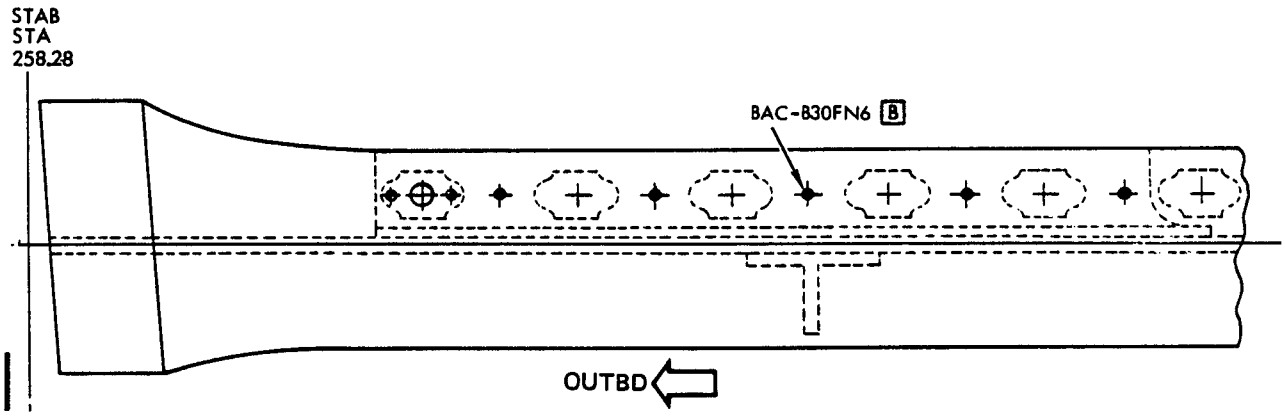


TYPICAL REPAIR
LOWER CHORD REPAIR SHOWN

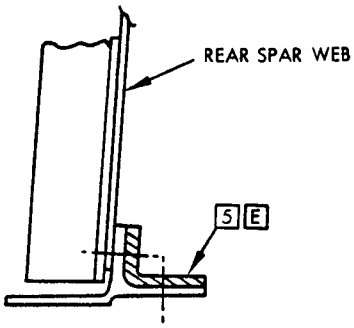


SECTION A–A

FWD

DETAIL I



Horizontal Stabilizer Front and Rear Spar Repair
Figure 1 (Sheet 4)

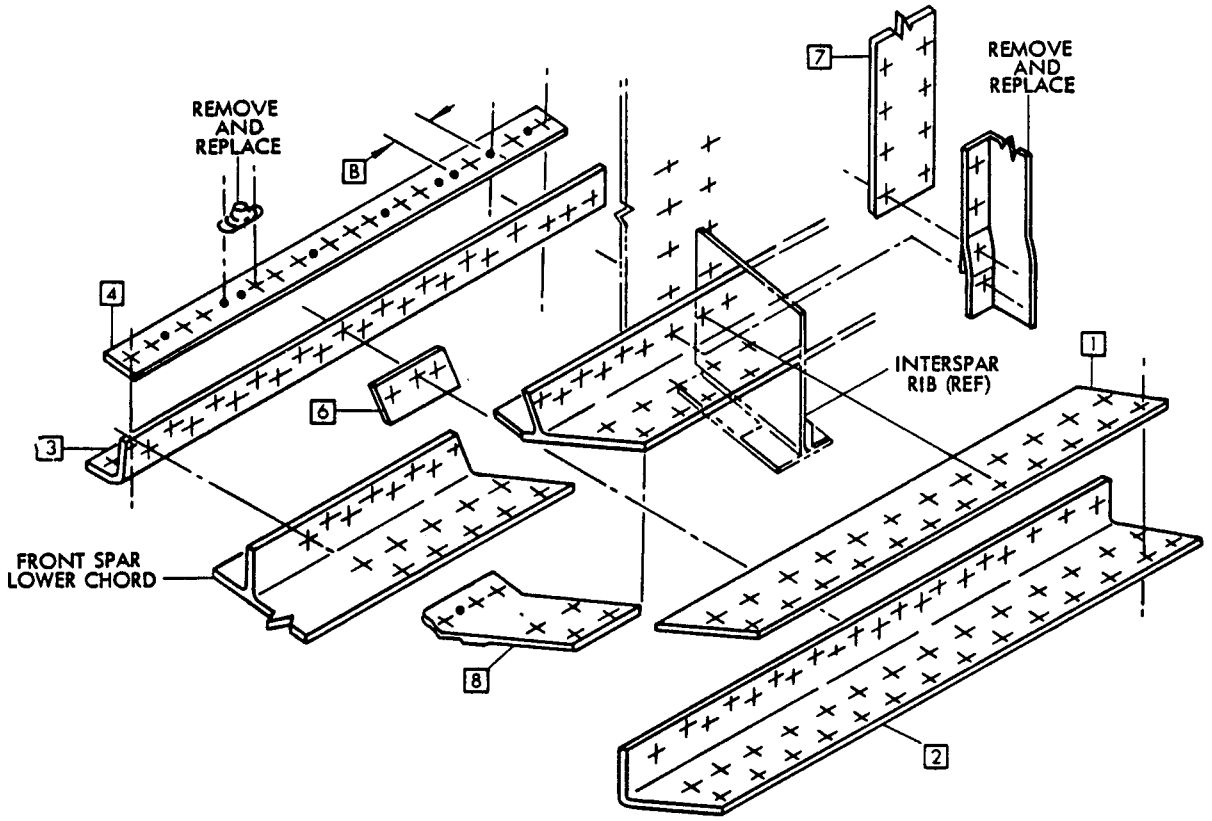


LOWER CHORD SHOWN, UPPER CHORD SIMILAR
FRONT SPAR REPAIR SHOWN

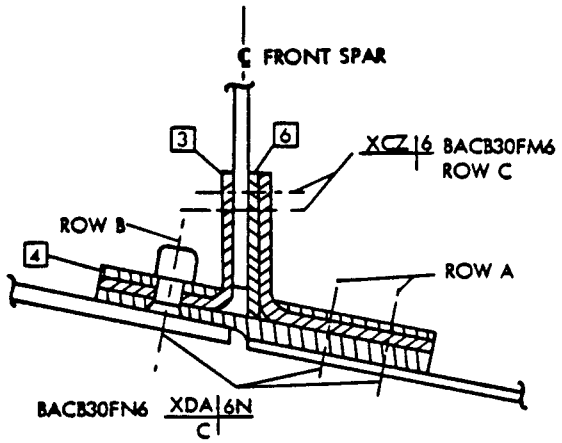


FRONT SPAR
SECTION THROUGH REPAIR

DETAIL II

REPAIR INSTRUCTIONS

1. Remove leading edge skin assembly panels as required per the Maintenance Manual 55-10-1.

2. If access to the damage cannot be reached through the holes in the spar web remove inspar skin fasteners along the ribs and spar chords and lift skin up as required to gain access.

3. Stop crack with a 0.25 dia hole.

4. Drill out fasteners and remove stiffener rivets as required to install repair part.

5. Fabricate repair parts.

6. Drill holes in repair parts to match holes in spar web.

7. Bond and rivet part [1] to web as outlined in 51-40-5.

8. Replace web stiffener and chord rivets using size and type of fasteners as in original installation.

9. Replace removed skins and leading edge panels and all fasteners.

10. Restore interior and exterior finish.

NOTE

- THIS REPAIR IS APPLICABLE TO REPAIRS ON THE FRONT SPAR WEB BETWEEN STABILIZER STA 157.10 AND 221.50.
- REFER 51-10-2 FOR METAL PROTECTIVE TREATMENT.
- BREAK SHARP EDGES 0.03R ON ALL REPAIR PARTS AND TRIMMED ORIGINAL PARTS.
- REFER 51-30 FOR FASTENER CODES, REMOVAL AND INSTALLATION, HOLE SIZES AND EDGE MARGINS.
- REFER 51-21-0 OF THE MAINTENANCE MANUAL FOR FINISH REQUIREMENTS.

+ ORIGINAL FASTENER LOCATIONS.

⊕ REPAIR FASTENER LOCATIONS.

| REPAIR MATERIAL | | | |
|---|---|---|---|
| PART | | QTY | MATERIAL |
| [1] | PLATE | 1 | 0.080 CLAD 7075-T6 |

Horizontal Stabilizer Front Spar Web Repair
Figure 2 (Sheet 1)

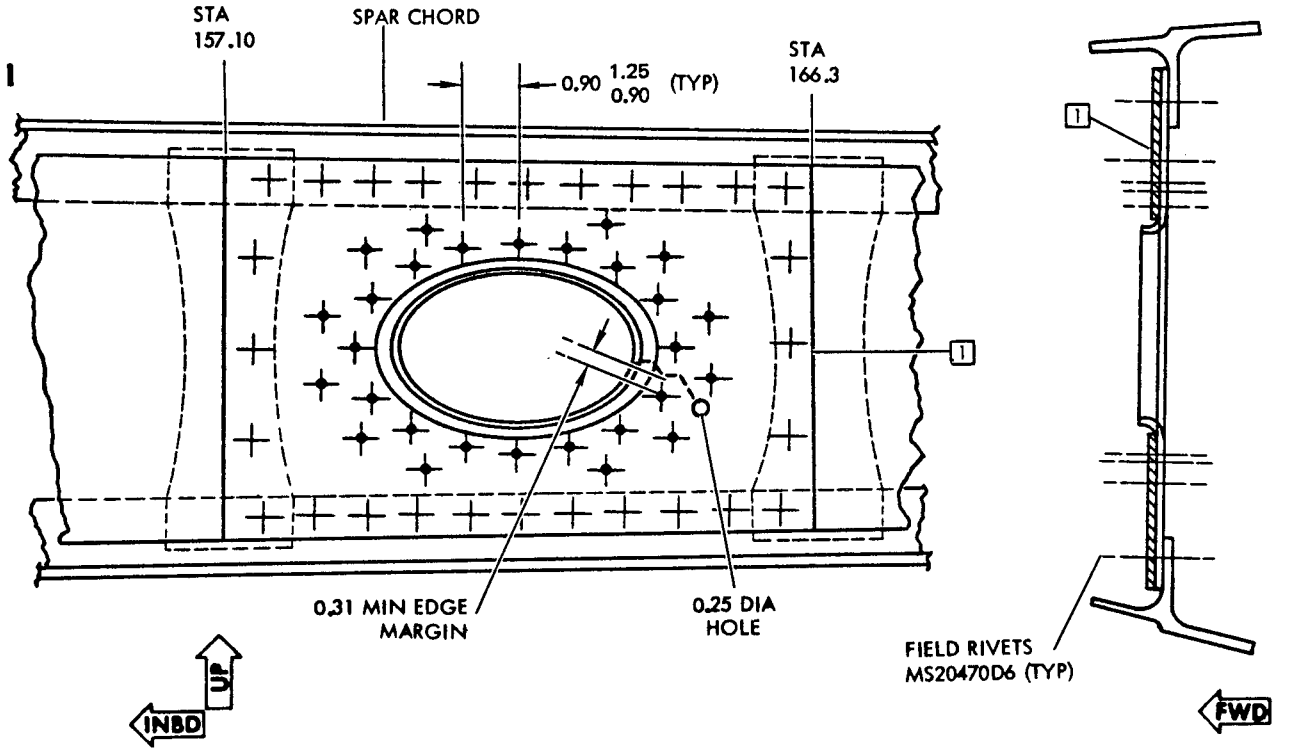


FRONT VIEW

SECTION THROUGH DAMAGE

1. Remove elevator and elevator balance support.
2. Remove upper and lower skins between front and rear spars to gain access to forward side of spar web.
3. Stop crack with a 0.25 diameter hole.
4. Drill out rivets in spar stiffeners and web as required to install repair part.
5. Fabricate the repair part.
6. Drill holes in repair part to match holes in the spar web.
7. Remove all burrs, nicks and scratches. Chamfer or radius 0.03 on all cut edges of repair part and original parts.
8. Brush alodine cut edges including edges of drilled holes.
9. Install the repair part on the spar web in accordance with the bonding instructions as outlined in 51-40-5.
10. Replace balance panel supports and fasteners.
11. Replace removed skins.
12. Restore original finish per 51-21-0 of the Maintenance Manual.

NOTES

- REFER 51-10-2 FOR METAL PROTECTIVE TREATMENT
- REFER 51-30 FOR FASTENER CODES, REMOVAL AND INSTALLATION, HOLE SIZES AND EDGE MARGINS

+ ORIGINAL FASTENER LOCATIONS

✚ REPAIR FASTENER LOCATIONS

[A]

| STABILIZER STATION | WEB GAGE | REPAIR FASTENER |
|---|---|---|
| 90.46-115.50 | 0.112 | MS20470D6 |
| 115.50-141.95 | 0.080 | |
| 141.95-193.50 | 0.063 | MS20470D5 |
| 193.50-221.50 | 0.050 | |
| 221.50-258.28 | 0.040 | |

[B] REPLACE EXISTING FASTENERS WITH FASTENERS OF THE SAME SIZE AND TYPE AS USED ON ORIGINAL INSTALLATION

| REPAIR MATERIAL | | | |
|---|---|---|---|
| PART | | QTY | MATERIAL |
| [1] | PLATE | 1 | CLAD 7075-T6 [A] |

Horizontal Stabilizer Rear Spar Web Repair
Figure 3 (Sheet 1)

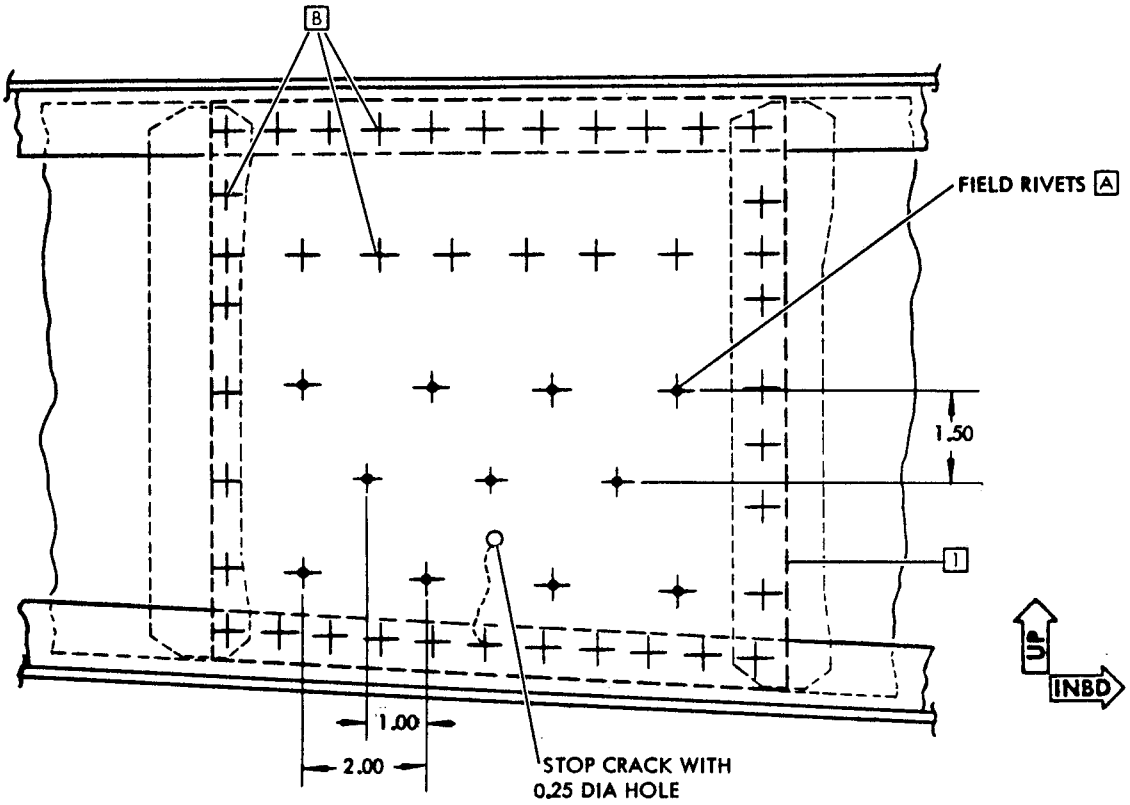


REAR VIEW

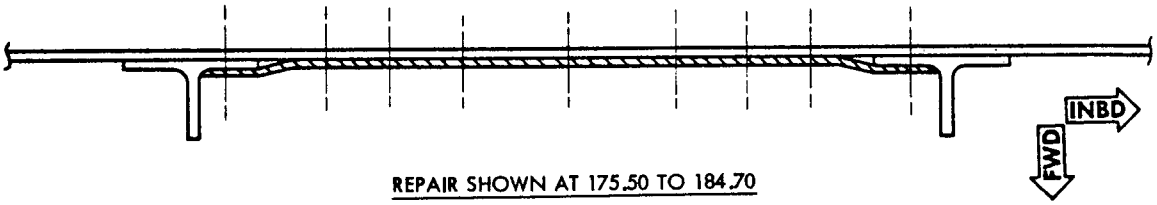


REPAIR SHOWN AT 175.50 TO 184.70

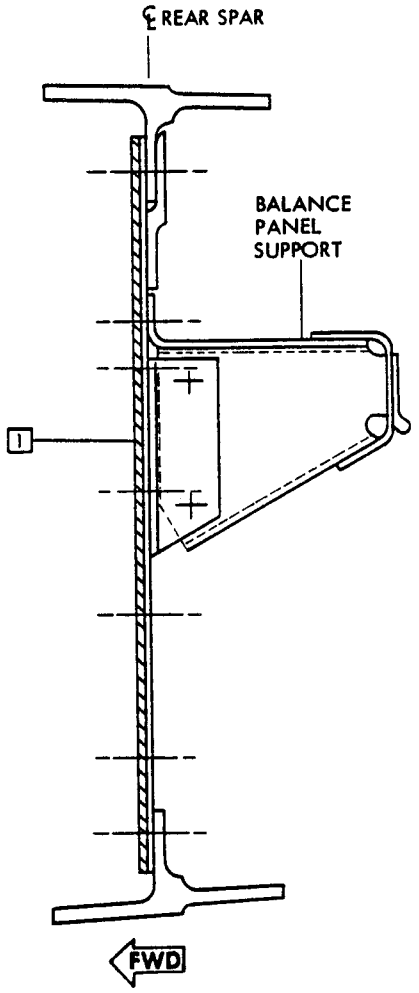


SECTION THROUGH DAMAGE



Horizontal Stabilizer Rear Spar Web Repair
Figure 3 (Sheet 3)

Removal Procedures (Detail I)

1. Remove the horizontal stabilizer outboard sections from both left and right hand sides of the airplane. Procedures for this are provided in 27-41-11 of the 737 Maintenance Manual.

2. Remove the removable seal plate panels from both left and right hand sides of the fuselage at the center section front and rear spars (Details I and III).

3. Remove the skin panel aft of Body Station 1104 between stringer S-5 and S-12 extending aft to Body Station 1138 from left-hand side only by drilling out approximately 353 aluminum rivets (Details I and III).

4. Remove sections of fuselage frames between stringers S-5 and S-12 at fuselage stations 1104, 1112, 1121, 1129 and 1138 by removing the aluminum rivets from upper and lower ends (Details I, IV and V).

5. Manually position center section forward end to maximum down position.

   WARNING: INADVERTENT ACTIVATION OF THE JACKSCREW COULD CAUSE PERSONNEL INJURY.

5A. Deactivate the jackscrew per 27-41-81 (par. 2B) of the 737 Maintenance Manual.

5B. Disassemble the jackscrew support fitting from the center section (Detail II). Pivot the jackscrew support fitting away from the center section and restrain it.

6. Provide suitable wood beams approximately 4 inch by 4 inch cross-section to support center section at any approximately horizontal position (Detail II).

7. Remove upper and lower horizontal stabilizer locks and slowly lower stabilizer center section onto wood supports.

8. Remove the pivot pins at the aft end per applicable portions of the procedures in 27-41-31 of the 737 Maintenance Manual.

8A. Detach the thrust brace fittings from the hinge housings (Detail VII). Rotate the fittings away from the hinge housings and restrain them. Remove hinge housing assemblies.

Horizontal Stabilizer Center Section - Removal/Installation
Figure 1 (Sheet 1)

9. Slide the center section forward while rotating the aft end outboard to the left.

10. The center section can now be removed from the fuselage with suitable hoisting equipment and placed on supports at a convenient height for repairs.

    NOTE: The center section weighs approximately 300 pounds.

Installation Procedure

1. Position wood beams as in removal instructions.

2. Lift center section up to aperture in tail section using suitable hoisting equipment. Carefully slide the center section into the fuselage and support on wood beams in the approximately correct position (Detail II).

2A. Install the hinge housing assemblies and reconnect thrust brace fittings

    (1) Install bolts with BMS 3-24 lubricant.

    (2) Tighten nuts to 290 to 510 pound-inches. Back off to nearest castellation, if necessary, to align castellations and cotter pin hole.

        NOTE: 0.01 to 0.04 inch gap permissible under washers. No gap allowed under head of bolt.

    (3) Install cotter pins per 20-50-02.

3. Install the pivot pins at the aft end per applicable portions of the procedures in 27-41-31 of the 737 Maintenance Manual.

4. Install lower horizontal stabilizer lock. Lower stabilizer truss until it contacts lock. Install upper horizontal stabilizer lock.

5. Remove shoring timbers from center section.

6. Reassemble the jackscrew support fitting to the center section.

6A. Check that the gap between the jackscrew support fitting and station 1088 bulkhead just aft of the jackscrew is 0.01 to 0.05 inch on both sides of the stabilizer (see detail VI). Adjustment of this gap is provided by a shim (Ref drawing 65-46572).

7. Check torque loading of all bolts/nuts installed in par. 3 and 6.

Horizontal Stabilizer Center Section - Removal/Installation
Figure 1 (Sheet 2)


BOEING PROPRIETARY - Copyright © - Unpublished Work - See title page for details.

8. Install frames and stub frames using same type and size of fasteners as originally used. Oversized fasteners may be installed in oversize holes (Ref 51-30).

9. Reinstall body skins using same type and size of fasteners as originally used. Substitute oversize and alternative fasteners as required (Ref 51-30).

10. Install seal plates at front and rear spars.

11. Install the horizontal stabilizer and elevators as detailed in 27-41-11 of the 737 Maintenance Manual.

Horizontal Stabilizer Center Section - Removal/Installation
Figure 1 (Sheet 2A)


BOEING PROPRIETARY - Copyright © - Unpublished Work - See title page for details.

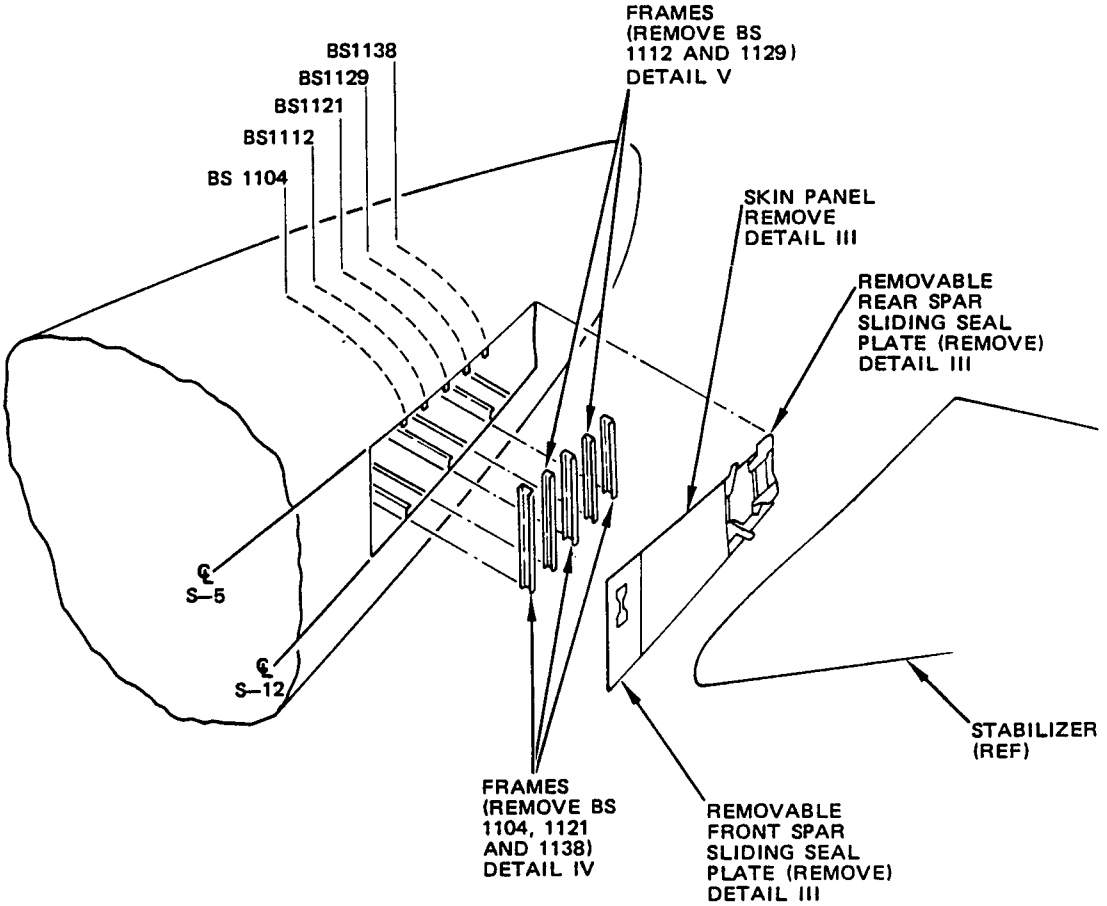


DETAIL I

Horizontal Stabilizer Center Section - Removal/Installation
Figure 1 (Sheet 3)

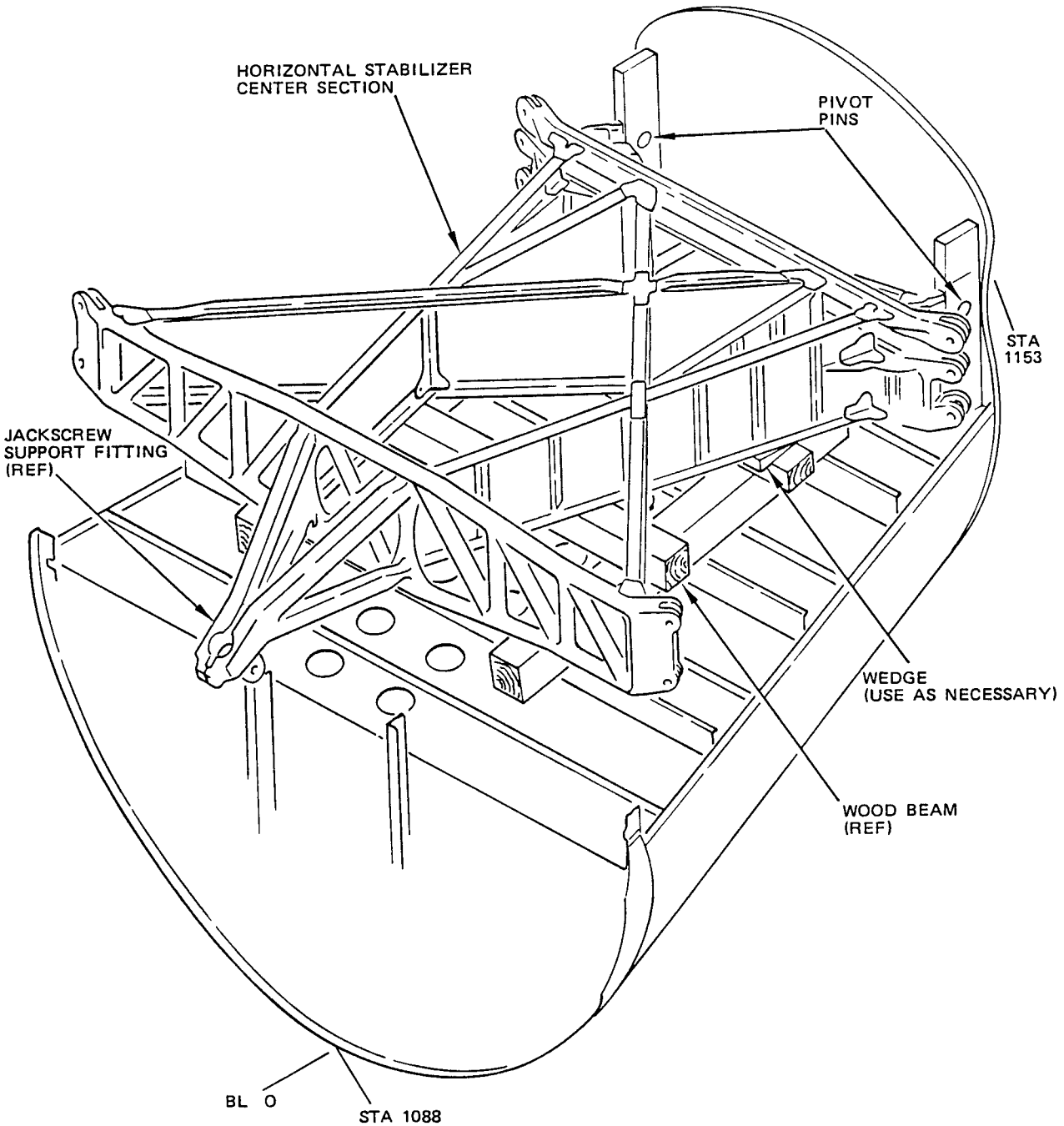


DETAIL II

Horizontal Stabilizer Center Section - Removal/Installation
Figure 1 (Sheet 4)

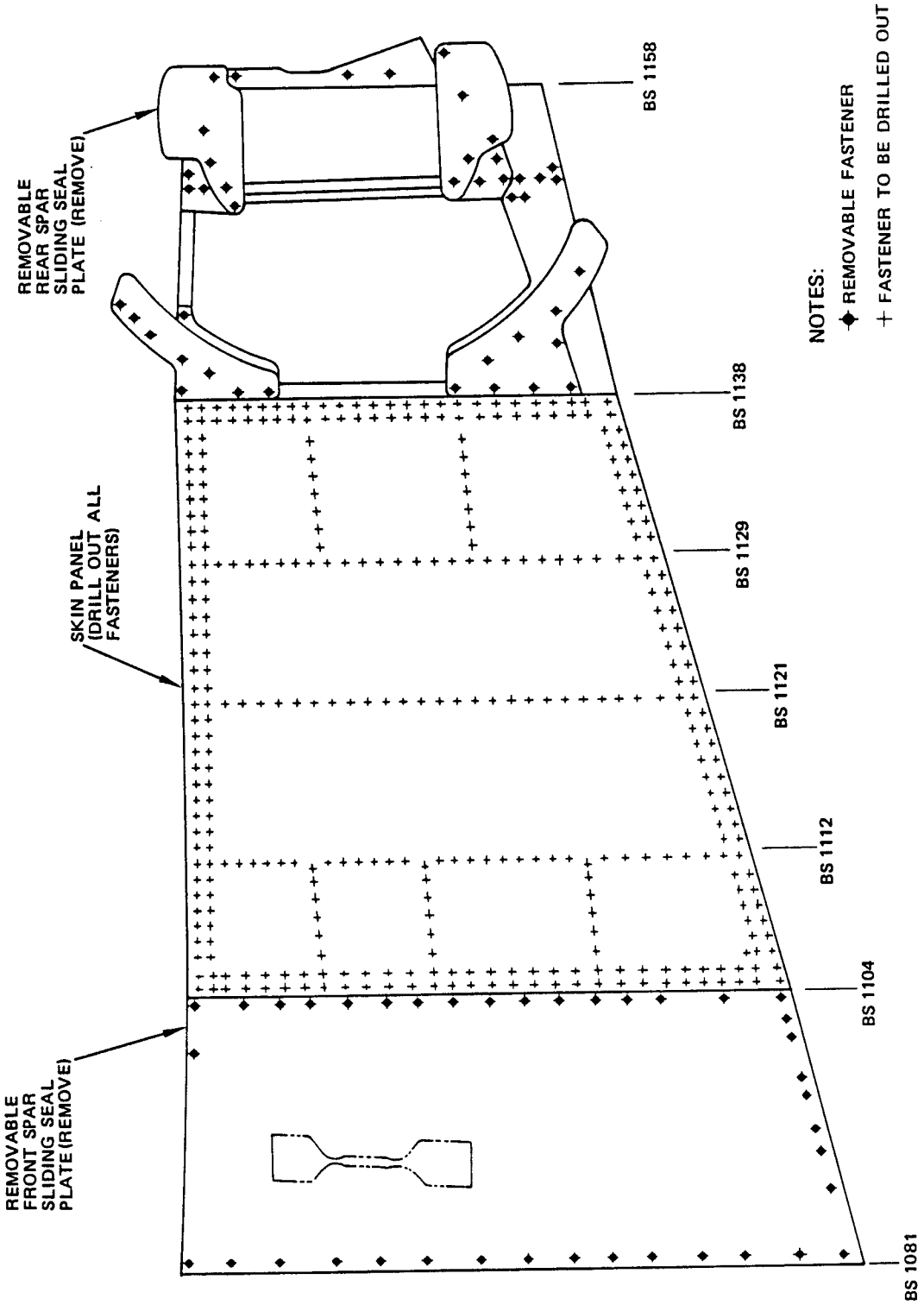


SEAL PLATE AND SKIN REMOVAL
DETAIL III

Horizontal Stabilizer Center Section - Removal/Installation
Figure 1 (Sheet 5)

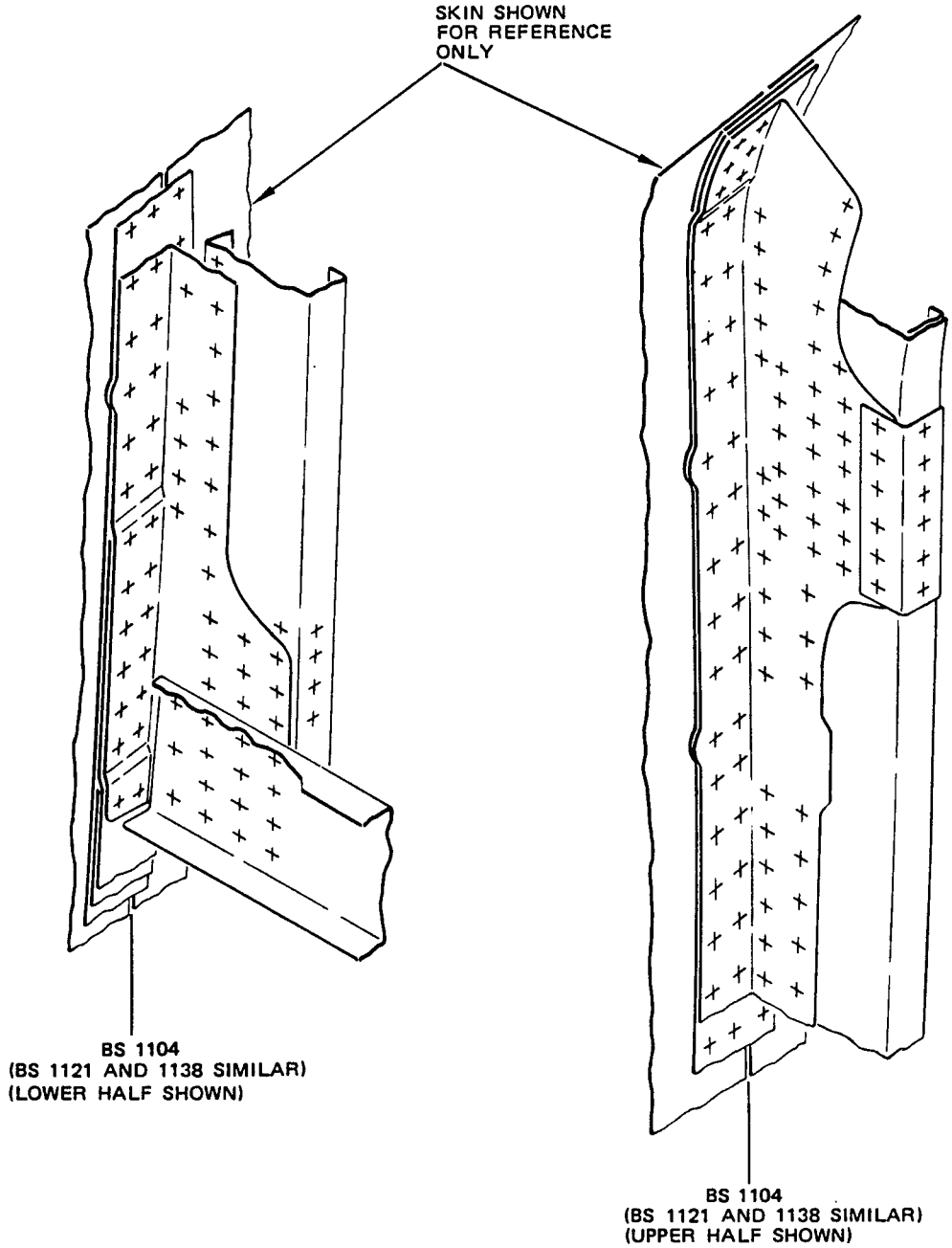


NOTES:

+ FASTENERS TO BE DRILLED OUT

● SOME FASTENERS MAY HAVE BEEN REMOVED DURING SKIN PANEL REMOVAL

FRAME REMOVAL BS 1104, 1121, AND 1138
DETAIL IV

Horizontal Stabilizer Center Section - Removal/Installation
Figure 1 (Sheet 6)

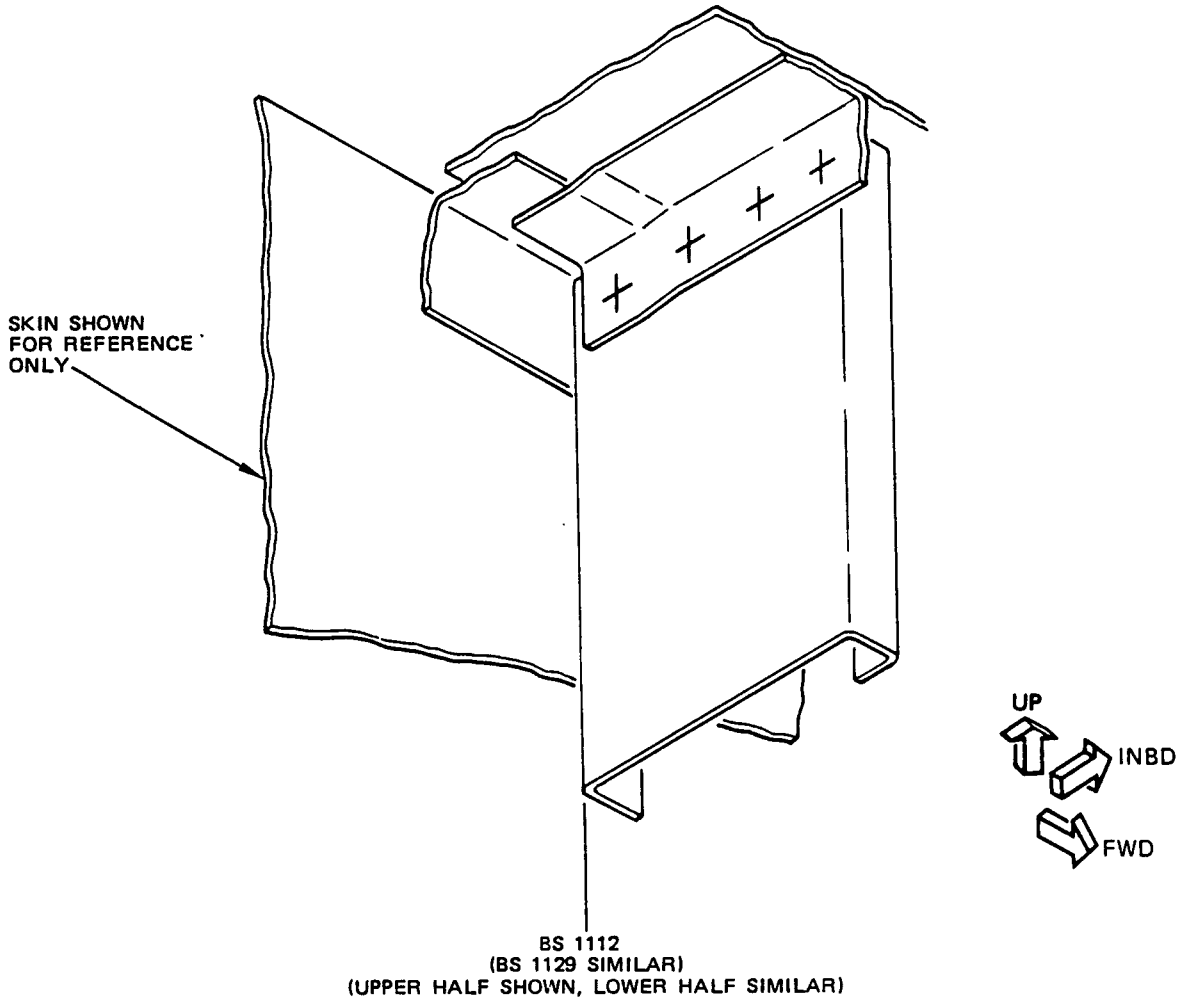


NOTES:

+ FASTENERS TO BE DRILLED OUT

FRAME REMOVAL BS 1112 AND 1129
DETAIL V

Horizontal Stabilizer Center Section - Removal/Installation
Figure 1 (Sheet 7)

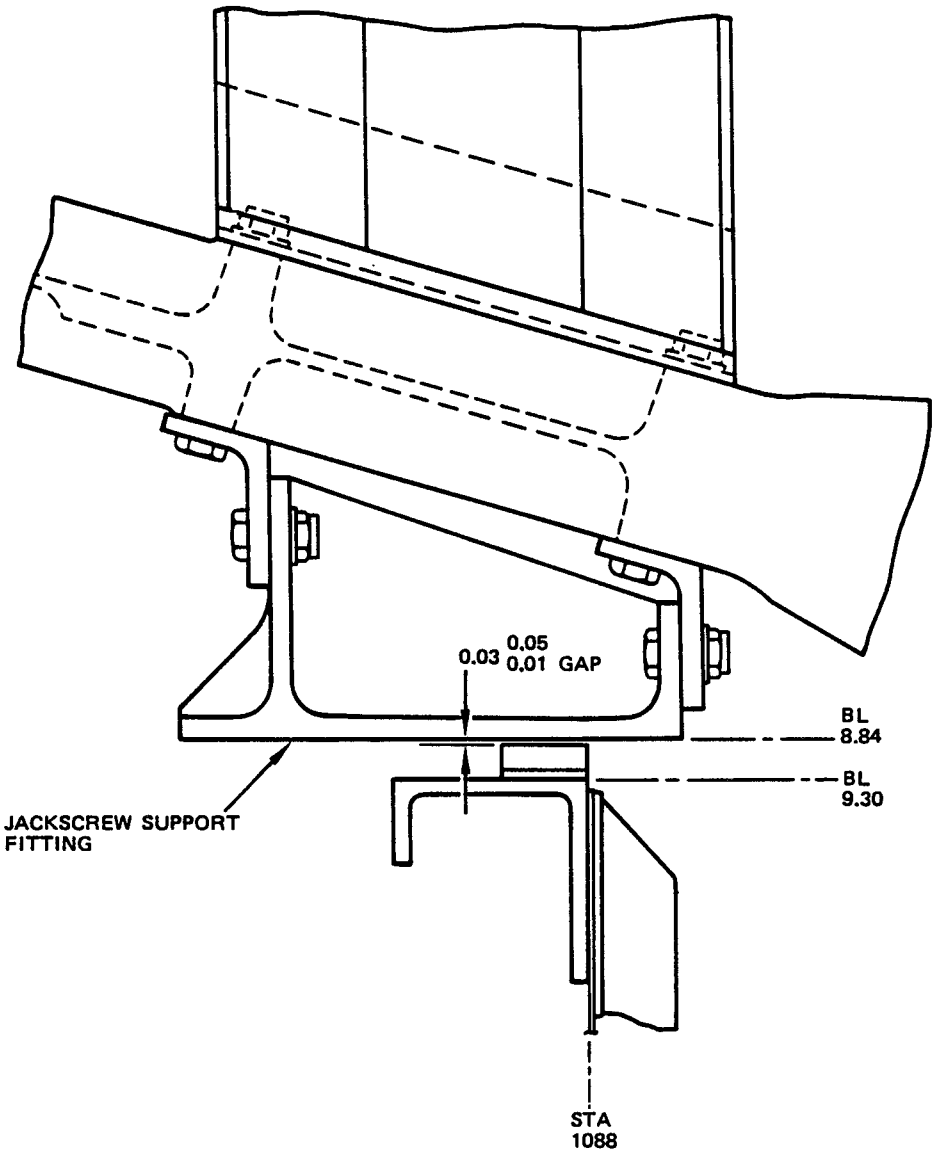


GAP REQUIREMENT

DETAIL VI

Horizontal Stabilizer Center Section - Removal/Installation
Figure 1 (Sheet 8)

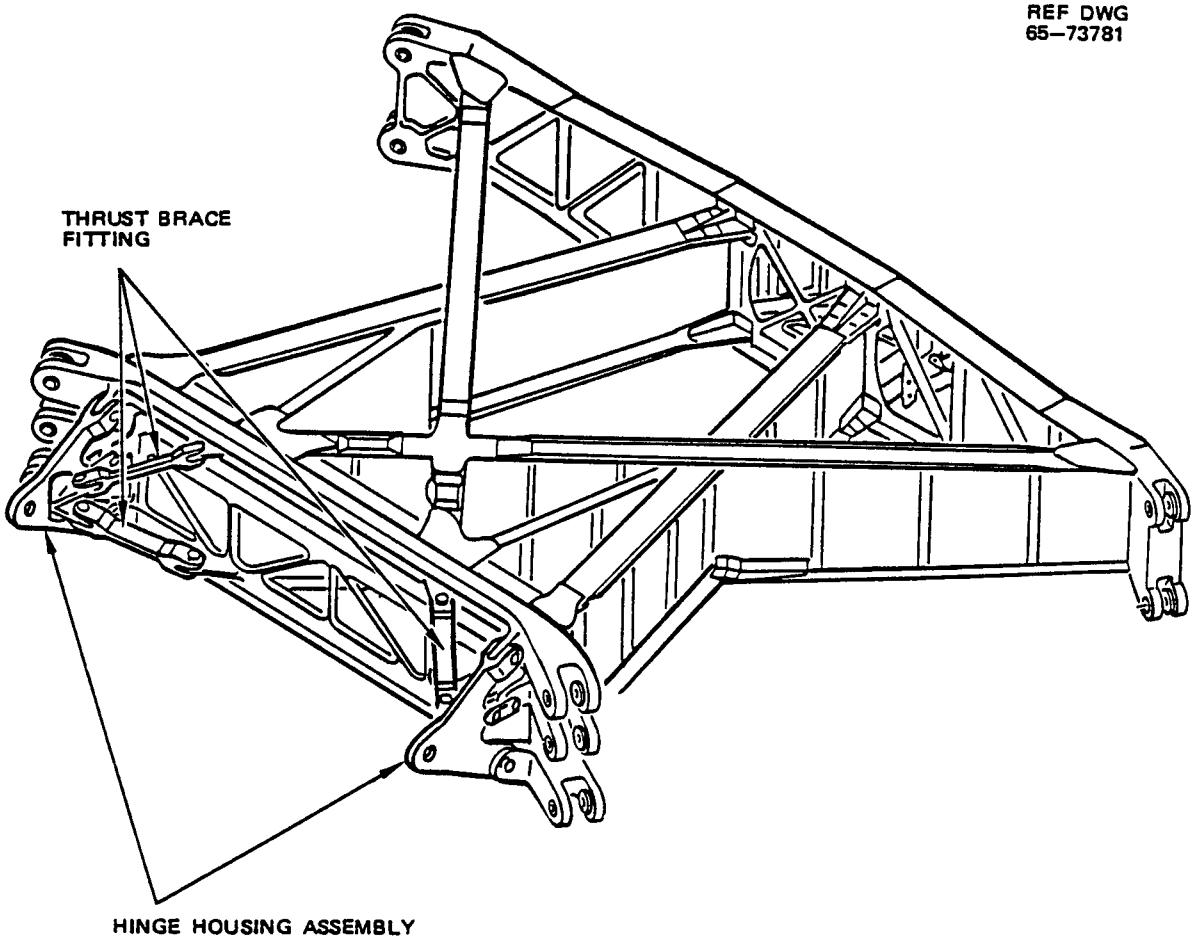
REF DWG
65-73781
THRUST BRACE
FITTING
HINGE HOUSING ASSEMBLY

DETAIL VII

## REPAIR INSTRUCTIONS

1. Get access to the damaged area. If necessary, remove the elevator. Refer to AMM 27-31-11. Remove the adjacent parts as necessary.
2. Remove the damage or corrosion from the cover plate. Refer to SRM 51-10-6.
3. Do a penetrant inspection as given in SOPM 20-20-02 to make sure the damage is removed.
4. Make the repair parts:
   A. If the cleanup is not more than 80% of the area of the cross section of the cover plate, do one of these repairs:
      - A flush repair as shown in Detail II and Table I
      - An external doubler repair as shown in Detail IV and Table II. [A] [B]
   B. If the cleanup:
      - Is more than 80% of the area of the cross section of the cover plate
      - Includes large areas of the cover plate.

      Do an external splice repair as shown in Detail VI and Table III. [D]

      NOTE: If there is not sufficient space to install the fasteners:
      - Install the repair so the part 7 spacer is outboard
      - Make sure there is sufficient clearance for the fasteners in the beam channel in the other areas of the repair.
5. Assemble the repair parts and drill the fastener holes.
6. Remove the nicks, scratches, gouges, burrs, and sharp edges from the repair parts and the initial parts.
7. Apply a chemical conversion coating to the repair parts and to the bare surfaces of the part 1 cover plate. Refer to SRM 51-10-2.
8. Apply two layers of BMS 10-11, Type I primer to the repair parts and to the bare surfaces of the initial parts. Refer to SOPM 20-41-02.
9. Install repair washers in the countersunk holes. Refer to SRM 51-30-8.
10. Install the repair parts, and the adjacent parts which were removed, with BMS 5-95 sealant. Apply the sealant between the mating surfaces and on the inner surfaces.
11. Install the fasteners. Fasteners that are not made of aluminum must be installed wet with BMS 5-95 sealant in transition fit holes.
12. Apply BMS 5-95 aerodynamic sealant to the edges of the cover plate or the splice cap and splice plate assembly.

## NOTES

- THIS REPAIR WILL NOT HAVE AN EFFECT ON A STRUCTURALLY SIGNIFICANT ITEM (SSI) GIVEN IN SRM 51-00-4, FIG. 3. THUS, NO CHANGE TO THE SUPPLEMENTAL STRUCTURAL INSPECTION DOCUMENT (SSID) INSPECTION PROGRAM IS NECESSARY.
- IF IT IS NECESSARY TO USE BLIND RIVETS, ADD TWO MORE FASTENERS TO EACH ROW OF THE REPAIR, ON EACH SIDE.
- BLIND RIVET REPAIRS MUST BE EXAMINED EACH FOUR "A" CHECKS AFTER INSTALLATION.
- BLIND RIVET REPAIRS MUST BE REPLACED WITH SOLID FASTENER OR BLIND BOLT REPAIRS BY THE SUBSEQUENT OVERHAUL.
- D = THE DIAMETER OF THE FASTENER
- KEEP A DISTANCE OF 4D TO 6D BETWEEN FASTENERS.
- KEEP EDGE MARGINS TO A MINIMUM OF 2D.
- KEEP GAPS TO 0.005 INCH OR LESS. USE 2024-T3 CLAD OR 7075-T6 CLAD FILLERS OR LAMINATED SHIM STOCK.
- ALL DIMENSIONS ARE IN INCHES, UNLESS GIVEN DIFFERENTLY.
- WHEN YOU USE THIS REPAIR REFER TO:
  - AMM 27-31-0 FOR THE ADJUSTMENT AND TEST OF THE ELEVATOR AND TAB CONTROL SYSTEM
  - AMM 27-31-11 FOR THE REMOVAL AND INSTALLATION OF ELEVATORS
  - NDT PART 6, 51-00-00, FOR THE EDDY CURRENT PROCEDURES
  - SOPM 20-41-02 FOR THE APPLICATION OF CORROSION RESISTANT PRIMER
  - SRM 51-10-1 FOR DAMAGE CLASSIFICATION
  - SRM 51-10-2 FOR PROTECTIVE TREATMENT OF METAL REPAIR PARTS
  - SRM 51-10-6 FOR CORROSION REMOVAL
  - SRM 51-20-4 FOR REPAIR SEALING
  - SRM 51-30 FOR FASTENER CODE, REMOVAL, INSTALLATION, HOLE SIZES AND EDGE MARGINS
  - SRM 51-30-8 FOR COUNTERSINKING AND COUNTERSINK REPAIR WASHERS.

[A] IF YOU DO THIS REPAIR ON THE LOWER TRAILING EDGE BEAM, DO NOT PERMIT THE DOUBLER TO MAKE AN OVERLAP WITH THE FORWARD PANELS. YOU MUST BE ABLE TO REMOVE THESE PANELS.

Horizontal Stabilizer Trailing Edge Beam Cover Plate Repair
Figure 1 (Sheet 1)


BOEING PROPRIETARY - Copyright © - Unpublished Work - See title page for details.

## NOTES (CONTINUED)

[B] IN THE BALANCE BAY AREA, THE FLUSH REPAIR IS THE PREFERRED REPAIR. [C] YOU CAN DO THE EXTERNAL DOUBLER REPAIR IF:

- THE TOTAL LENGTH OF THE DOUBLER FOR THE LEFT AND RIGHT UPPER AND LOWER TRAILING EDGE BEAMS IS NOT MORE THAN 80 INCHES
- THE MINIMUM TAPER OF THE CHAMFER ON ALL EDGES OF THE DOUBLER IS 6:1
- YOU MAKE SURE THE AIRPLANE OPERATES TO THE STANDARDS GIVEN IN THE ELEVATOR FLIGHT TEST IN AMM 27-31-0.

  IF THE AIRPLANE DOES NOT OPERATE TO THESE STANDARDS, ADJUST THE ELEVATOR TAB AND DO THE TEST AGAIN.

[C] THE BALANCE BAY AREA IS LOCATED BETWEEN ELEVATOR STATIONS 66.59 AND 149.12.

[D] DETAIL VI SHOWS THAT THE PART 7 SPACER IS OUTBOARD. AT THE OUTBOARD END OF THE TRAILING EDGE BEAM, THE REPAIR IN DETAIL VI IS LIMITED TO THIS POSITION. AT OTHER LOCATIONS, THAT REPAIR IS NOT LIMITED TO THIS POSITION. IT IS PERMITTED TO DO THE REPAIR SO THAT THE PART 7 SPACER IS INBOARD.

[E] THIS FASTENER MUST GO THROUGH THE BOTTOM OF THE BEAM CHANNEL AT THE HINGE RIB.

[F] MAKE A RADIUS THAT WILL ALIGN WITH THE CONTOUR OF THE BEAM CHANNEL.

[G] THERE MUST BE A MINIMUM OF FOUR FASTENERS ON EACH SIDE OF THE CUTOUT.

[H] USE THE SAME SPACING AS THE INITIAL FASTENERS IN THE CAP OF THE COVER PLATE.

[I] IF YOU DO THIS REPAIR IN THE BALANCE BAY AREA, ALL INSTALLED FASTENERS MUST BE FLUSH HEAD FASTENERS.

## FASTENER SYMBOLS

REFERENCE FASTENER LOCATION

INITIAL FASTENER LOCATION. INSTALL A FASTENER THAT IS THE SAME TYPE AND DIAMETER AS THE INITIAL FASTENER.

IF THE INITIAL FASTENER HOLE IS DAMAGED, INSTALL AN EQUIVALENT FASTENER THAT IS 1/64 OR 1/32 INCH OVERSIZE.

INITIAL FASTENER LOCATION. INSTALL A BACR15CE5D RIVET.

REPAIR FASTENER LOCATION. INSTALL A BACR15CE6D RIVET.

REPAIR FASTENER LOCATION. INSTALL A BACR15CE6D RIVET.

REPAIR FASTENER LOCATION. INSTALL A BACB30VK6 BLIND BOLT. IT IS PERMITTED TO USE AN MS 21140 OR A PLT 1058 BLIND BOLT AS AN ALTERNATE FASTENER. NAS 1674 BLIND BOLTS CAN BE USED AS AN ALTERNATE FASTENER WHERE SMALL AMOUNTS OF CORROSION ARE REMOVED.

INITIAL FASTENER LOCATION. INSTALL A FASTENER THAT IS THE SAME TYPE AND DIAMETER AS THE INITIAL FASTENER, BUT IS LONGER. [E]

IF THE INITIAL FASTENER HOLE IS DAMAGED, INSTALL AN EQUIVALENT FASTENER THAT IS 1/64 OR 1/32 INCH OVERSIZE.

| REPAIR MATERIAL | | | |
|---|---|---|---|
| PART | | QTY | MATERIAL |
| 1 | SPLICE CAP | AS REQ'D | 0.10 CLAD 7075-T6 |
| 2 | SPLICE STRAP | AS REQ'D | 0.04 CLAD 7075-T6 |
| 3 | STRAP | 1 | 0.05 CLAD 7075-T6 [F] |
| 4 | STRAP | 1 | 0.05 CLAD 7075-T6 [F] |
| 5 | STRAP | 1 | 0.063 CLAD 7075-T6 |
| 6 | FILLER | 1 | CLAD 7075-T6 (THICKNESS AS REQ'D) |
| 7 | SPACER | 1 | USE THE SAME BOEING PART NO. USED FOR THE INITIAL SPACER |

TABLE I

Horizontal Stabilizer Trailing Edge Beam Cover Plate Repair
Figure 1 (Sheet 2)

| REPAIR MATERIAL | | | |
|---|---|---|---|
| PART | | QTY | MATERIAL |
| 1 | DOUBLER | 1 | 0.063 TO 0.10 2024-T3 |
| 2 | FILLER | 1 | 2024-T3 USE THE SAME THICKNESS AS THE INITIAL PART |

TABLE II

| REPAIR MATERIAL | | | |
|---|---|---|---|
| PART | | QTY | MATERIAL |
| 1 | SPLICE CAP | AS REQ'D | 0.10 CLAD 7075-T6 |
| 2 | SPLICE STRAP | AS REQ'D | 0.04 CLAD 7075-T6 |
| 3 | STRAP | 1 | 0.05 CLAD 7075-T6 F |
| 4 | STRAP | 1 | 0.05 CLAD 7075-T6 F |
| 5 | STRAP | 1 | 0.063 CLAD 7075-T6 |
| 6 | FILLER | 1 | CLAD 7075-T6 (THICKNESS AS REQ'D) |
| 7 | SPACER | 1 | USE THE SAME BOEING PART NO. USED FOR THE INITIAL SPACER |
| 8 | DOUBLER | 1 | 0.063 CLAD 7075-T6 |

TABLE III

Horizontal Stabilizer Trailing Edge Beam Cover Plate Repair
Figure 1 (Sheet 3)

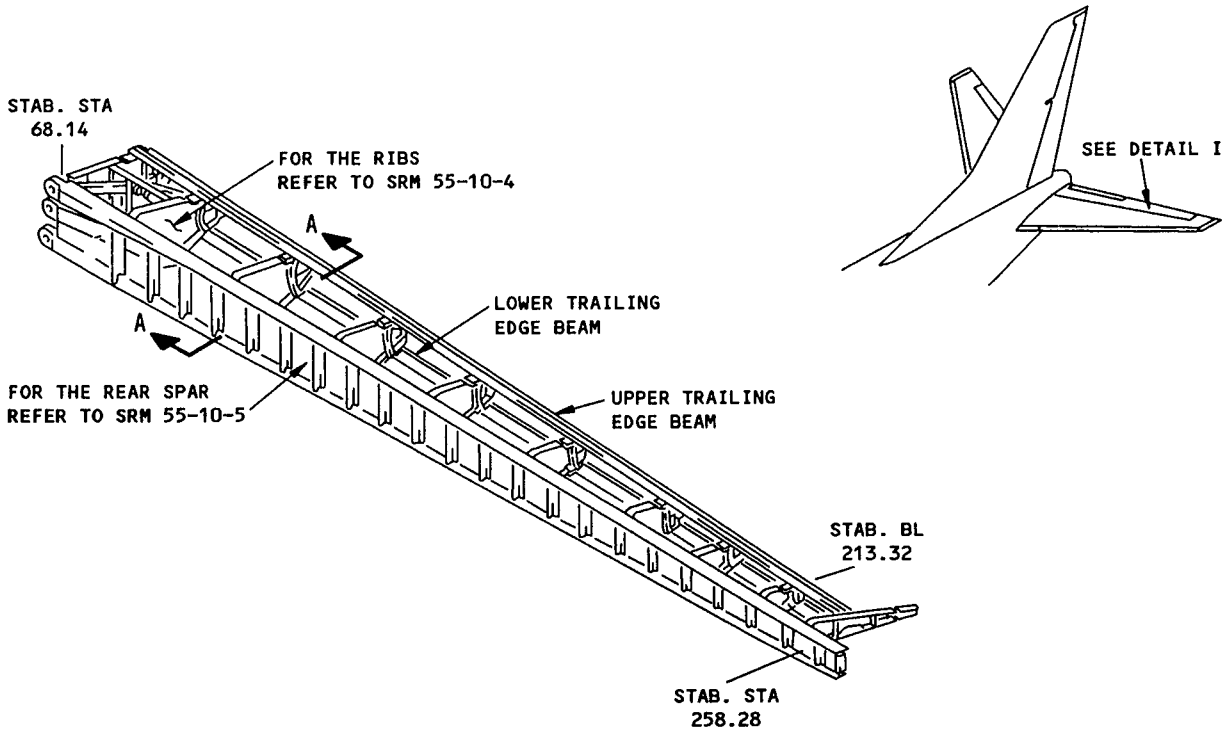


TRAILING EDGE BEAM
DETAIL I

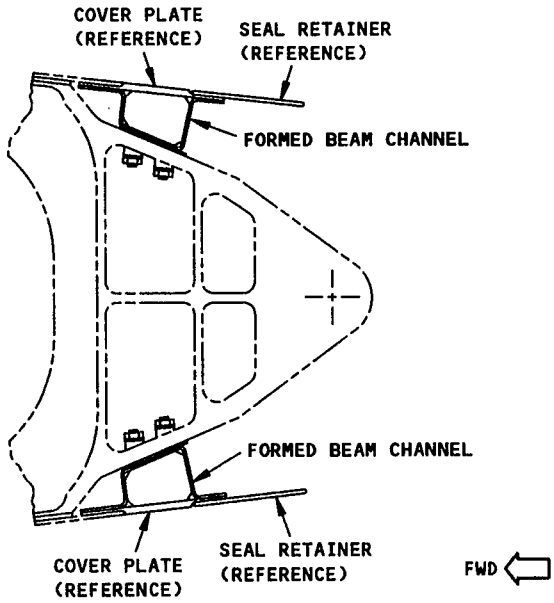


SECTION VIEW SIMILAR FOR
OTHER HINGE FITTING LOCATIONS

SECTION A-A F

Horizontal Stabilizer Trailing Edge Beam Cover Plate Repair
Figure 1 (Sheet 4)

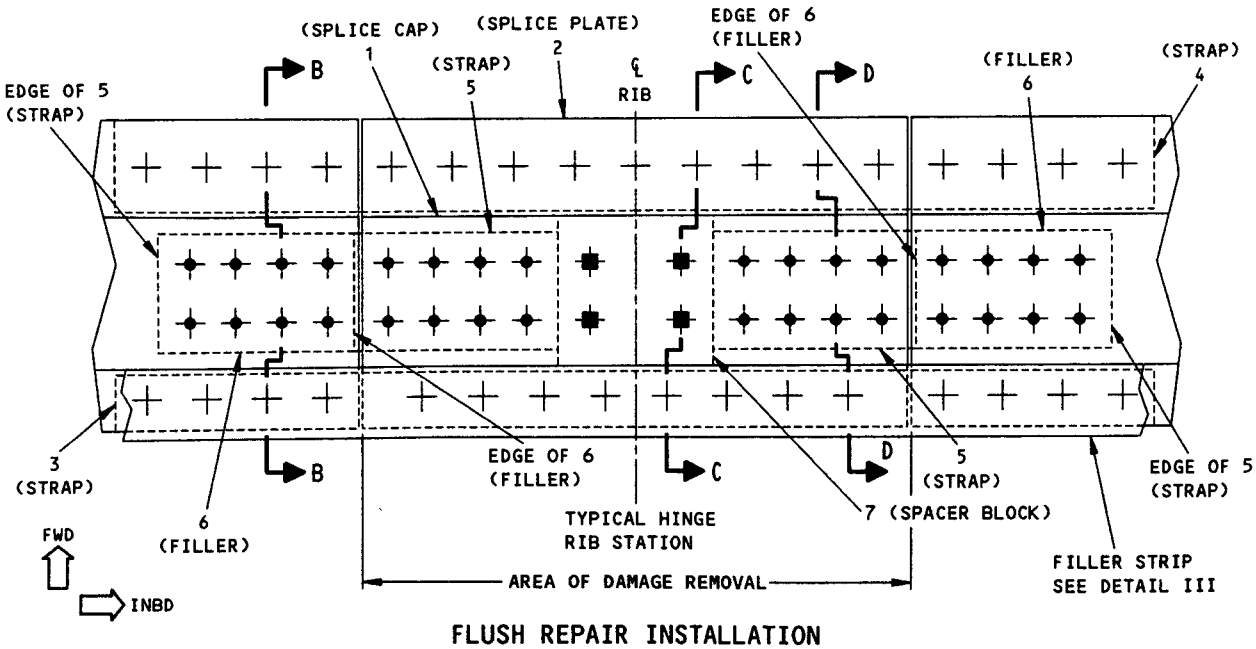


FLUSH REPAIR INSTALLATION
(BALANCE BAY AREA SHOWN)
THE TE PANEL IS NOT SHOWN FOR CLARITY
DETAIL II

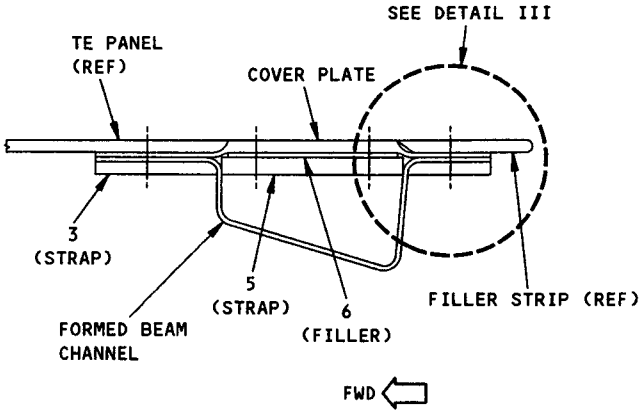


SECTION B-B

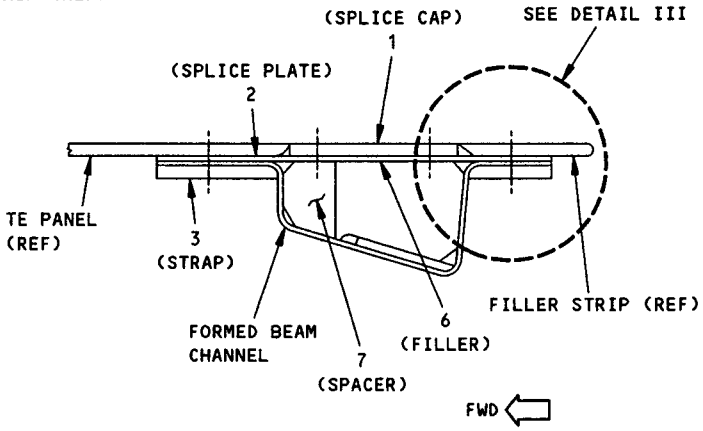


SECTION C-C

Horizontal Stabilizer Trailing Edge Beam Cover Plate Repair
Figure 1 (Sheet 5)


BOEING PROPRIETARY - Copyright © - Unpublished Work - See title page for details.

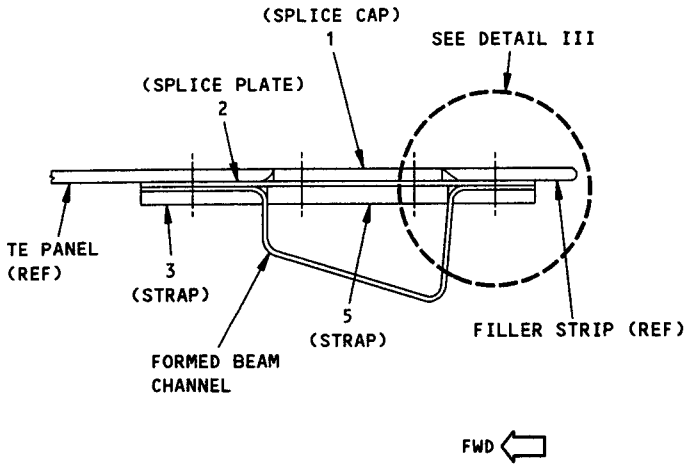


SECTION D-D

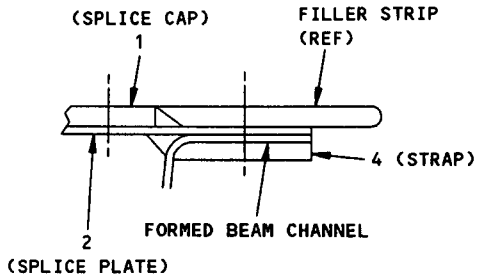


AFT FLANGE WITHOUT
SERVICE BULLETIN
737-55-1014 INCORPORATED

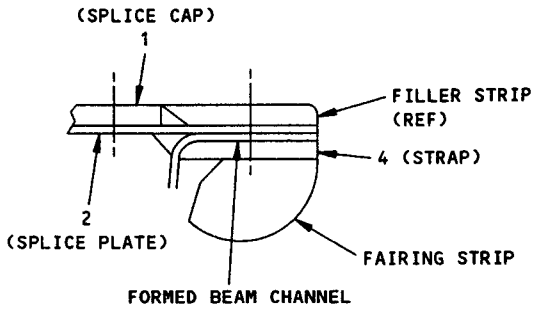


AFT FLANGE WITH
SERVICE BULLETIN
737-55-1014 INCORPORATED

FLUSH REPAIR
(AFT FLANGE AREA)
DETAIL III

Horizontal Stabilizer Trailing Edge Beam Cover Plate Repair
Figure 1 (Sheet 6)



BOEING PROPRIETARY - Copyright © - Unpublished Work - See title page for details.

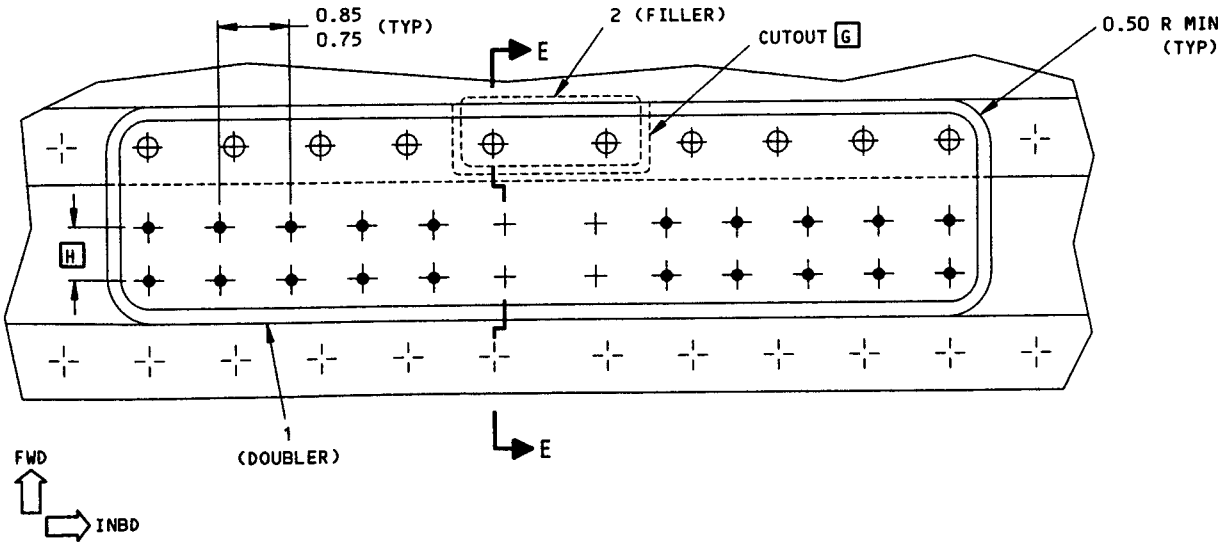


EXTERNAL DOUBLER
REPAIR INSTALLATION
(FOR AREAS OUTSIDE THE BALANCE BAY ONLY)
DETAIL IV I

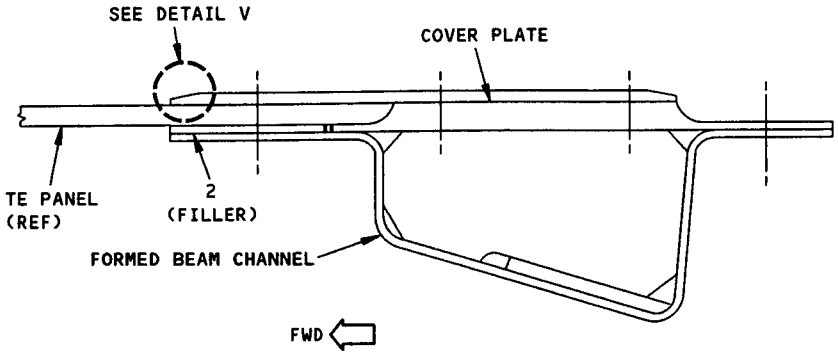


SECTION E-E

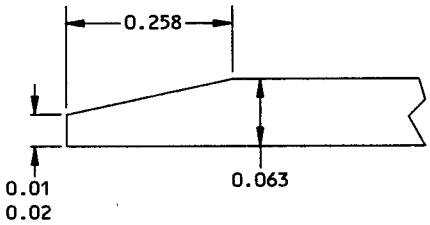


DETAIL V

Horizontal Stabilizer Trailing Edge Beam Cover Plate Repair
Figure 1 (Sheet 7)


BOEING PROPRIETARY - Copyright © - Unpublished Work - See title page for details.

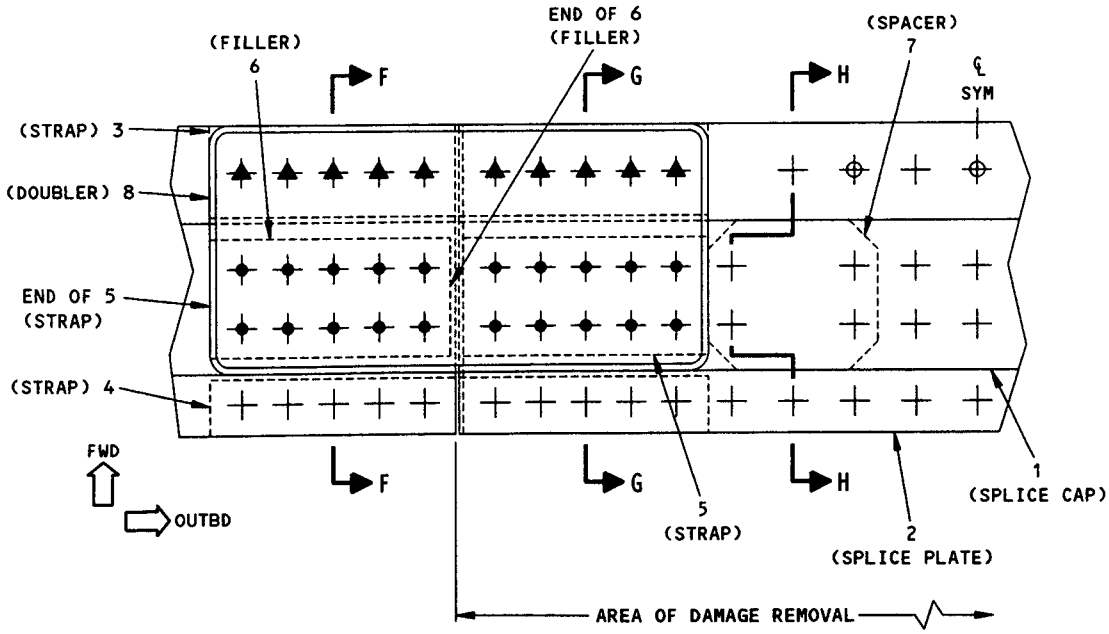


EXTERNAL SPLICE REPAIR INSTALLATION
(FOR AREAS OUTSIDE THE BALANCE BAY ONLY)
TE PANEL NOT SHOWN FOR CLARITY

DETAIL VI

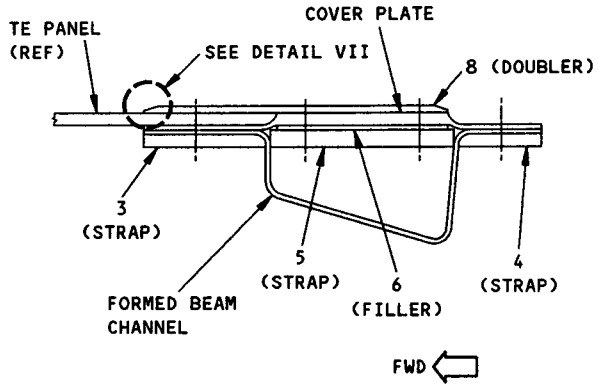


SECTION F-F

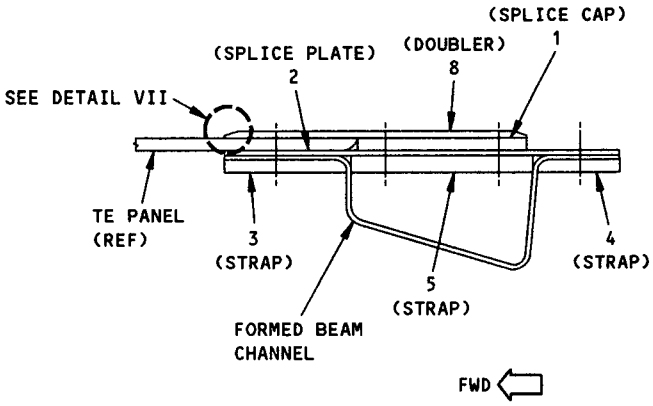


SECTION G-G

Horizontal Stabilizer Trailing Edge Beam Cover Plate Repair
Figure 1 (Sheet 8)


BOEING PROPRIETARY - Copyright © - Unpublished Work - See title page for details.

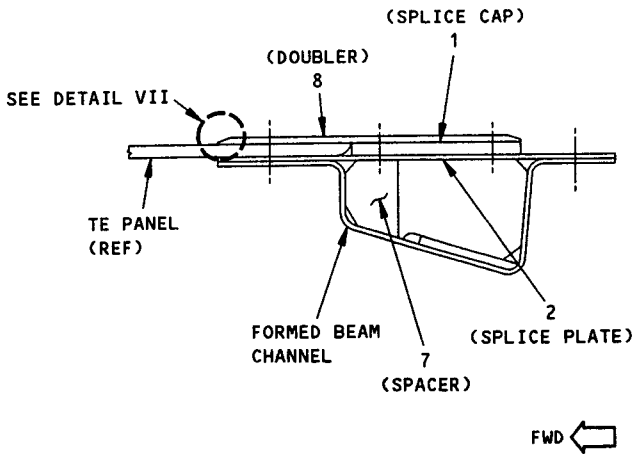


SECTION H-H

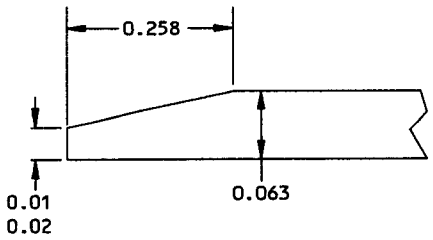


DETAIL VII

Horizontal Stabilizer Trailing Edge Beam Cover Plate Repair
Figure 1 (Sheet 9)


BOEING PROPRIETARY - Copyright © - Unpublished Work - See title page for details.

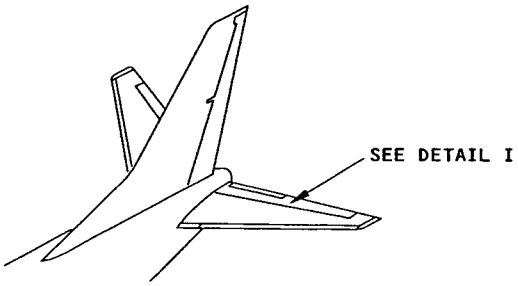


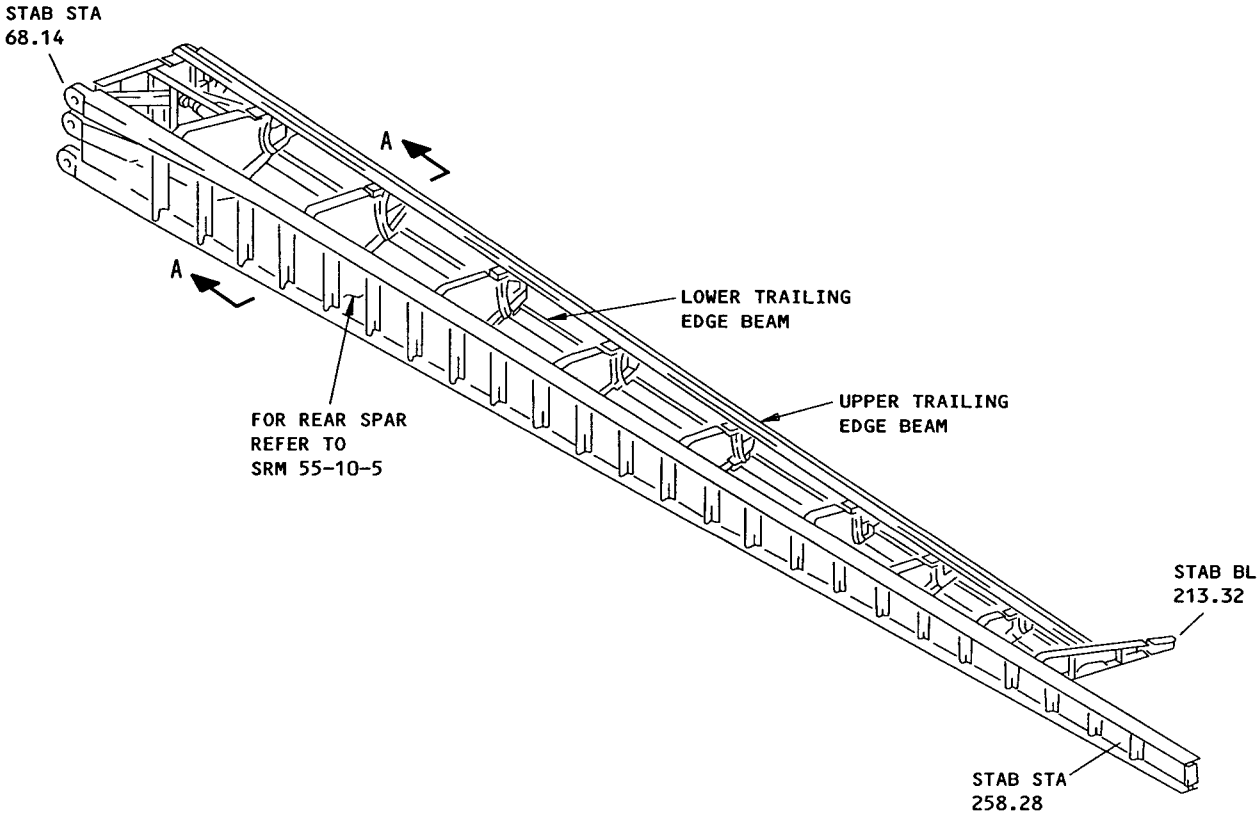


TRAILING EDGE BEAM
DETAIL I

## NOTES

- THESE REPAIRS WILL NOT HAVE AN EFFECT ON A STRUCTURALLY SIGNIFICANT ITEM (SSI) GIVEN IN SRM 51-00-4, FIG. 3. THUS, NO CHANGE TO THE SUPPLEMENTAL STRUCTURAL INSPECTION DOCUMENT (SSID) INSPECTION PROGRAM IS NECESSARY.
- TO REPAIR A FORMED BEAM CHANNEL, REFER TO SRM 51-40-3.
- MAKE SURE THERE IS SUFFICIENT CLEARANCE BETWEEN THE TRAILING EDGE BEAM AND ADJACENT STRUCTURE TO INSTALL THE REPAIR PARTS.
- REFER TO THE LIMITS GIVEN IN THE TYPICAL REPAIRS BEFORE YOU DO A REPAIR.

[A] REFER TO SRM 55-10-2, FIGURE 2 FOR EFFECTIVITIES.

Horizontal Stabilizer Trailing Edge Beam Channel Repairs
Figure 2 (Sheet 1)


BOEING PROPRIETARY - Copyright © - Unpublished Work - See title page for details.

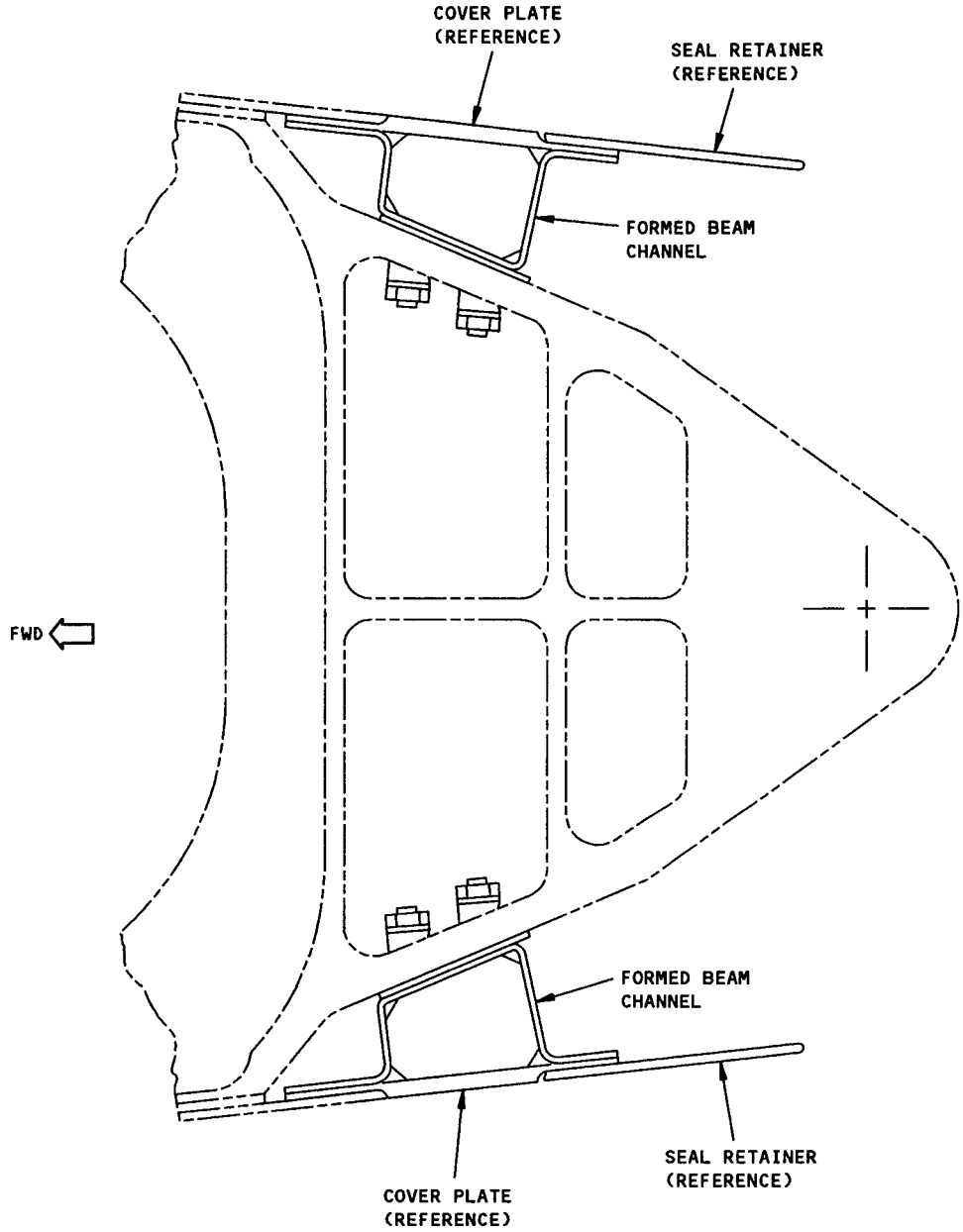


SECTION VIEW SIMILAR FOR OTHER HINGE FITTING LOCATIONS

SECTION A-A [A]

Horizontal Stabilizer Trailing Edge Beam Channel Repairs
Figure 2 (Sheet 2)


BOEING PROPRIETARY - Copyright © - Unpublished Work - See title page for details.

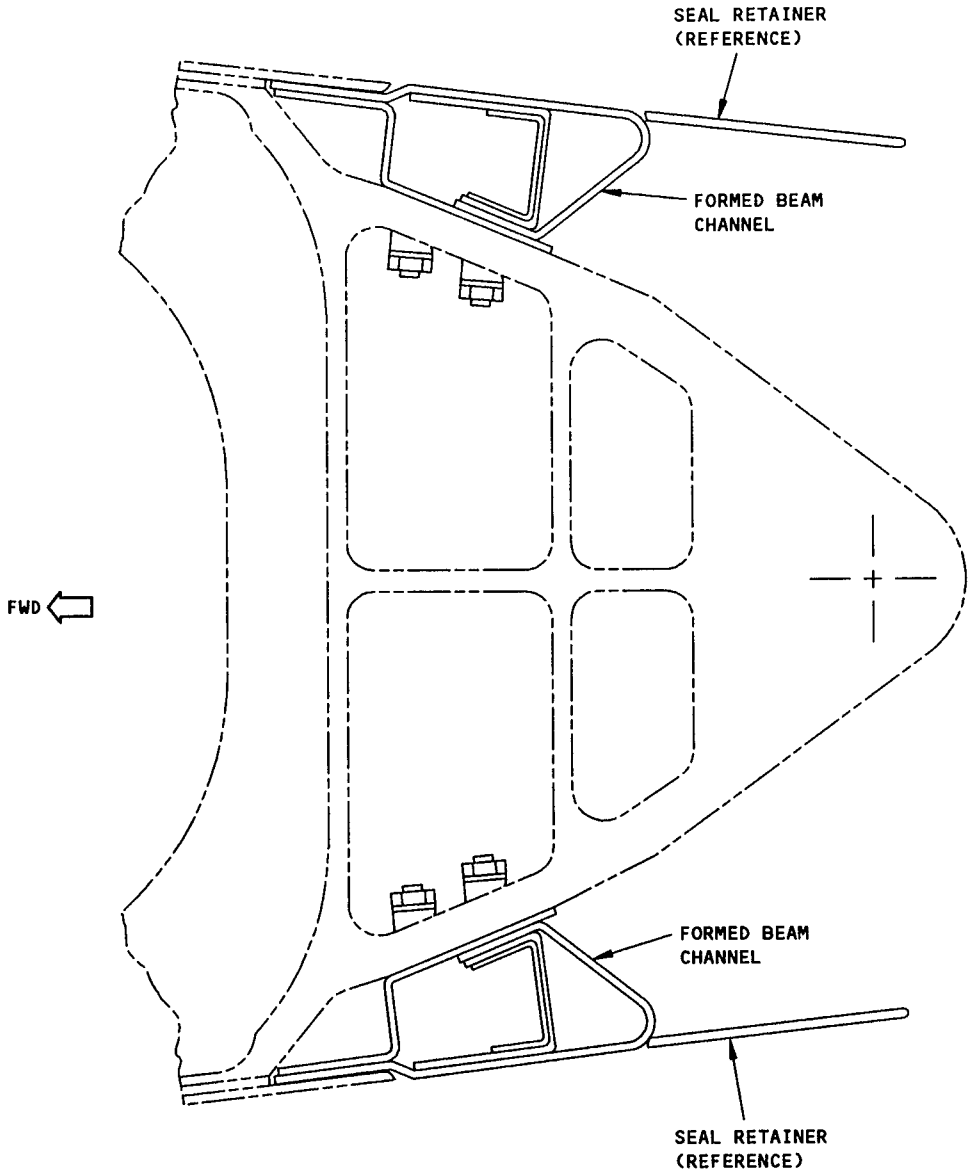


SECTION VIEW SIMILAR FOR OTHER HINGE FITTING LOCATIONS

SECTION A-A [A]

Horizontal Stabilizer Trailing Edge Beam Channel Repairs
Figure 2 (Sheet 3)

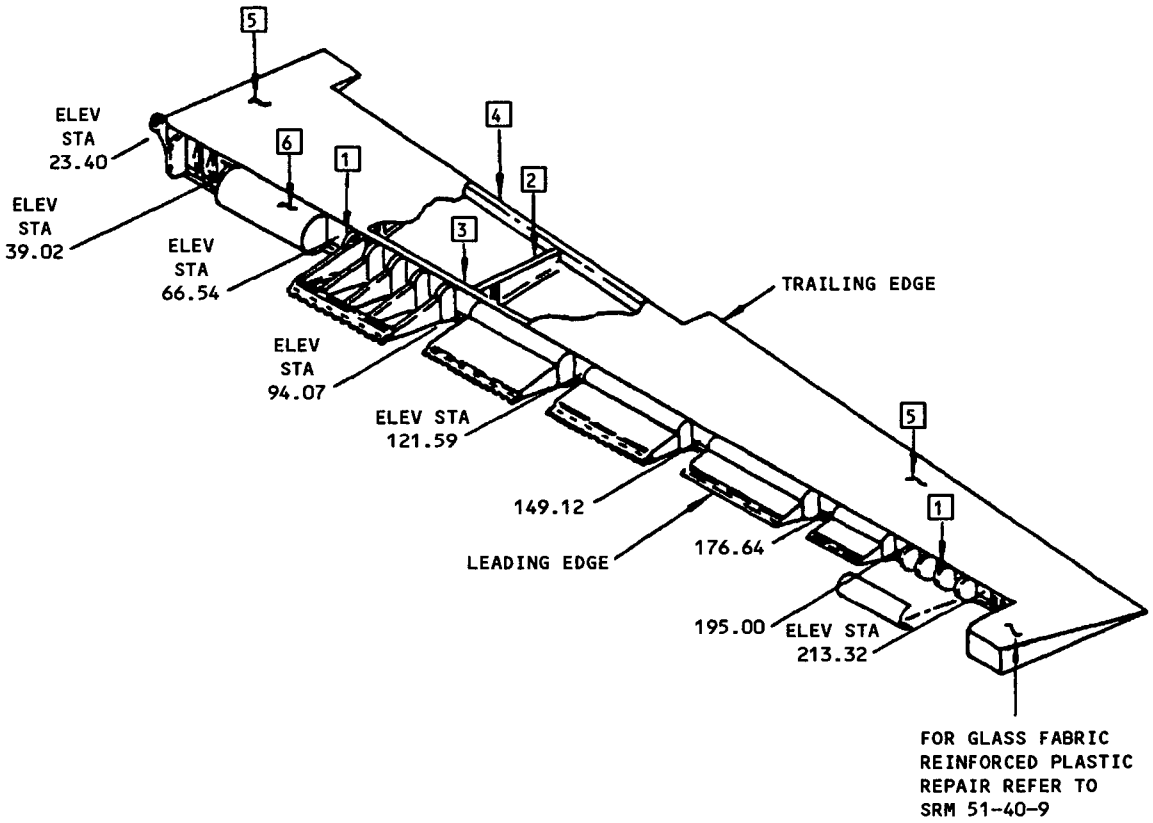


## NOTES

- THE ALLOWABLE DAMAGE LIMITS GIVEN IN THIS FIGURE WILL NOT HAVE AN EFFECT ON A STRUCTURALLY SIGNIFICANT ITEM (SSI) GIVEN IN SRM 51-00-4, FIG. 3. THUS, NO CHANGE TO THE SUPPLEMENTAL STRUCTURAL INSPECTION DOCUMENT (SSID) INSPECTION PROGRAM IS NECESSARY.
- REFER TO SRM 55-50 FOR ATTACHMENT FITTINGS.
- FOR GENERAL REPAIR PROCEDURES REFER TO SRM 51-10.
- FOR EDGE MARGIN REQUIREMENTS AFTER DAMAGE CLEAN UP REFER TO SRM 51-30-6.
- FOR CORROSION DAMAGE CLEAN UP REFER TO SRM 51-10-1.
- FOR AERODYNAMIC SMOOTHNESS REQUIREMENTS REFER TO SRM 51-70.
- A REPAIR OR REPLACEMENT OF A METAL STRUCTURAL MEMBER IS REQUIRED WHEN IT HAS BEEN SUBJECTED TO DAMAGE SUCH AS NICKS, SCRATCHES, GOUGES, DENTS AND HOLES THAT EXCEED THE ALLOWABLE DAMAGE.
- CLEAN UP ALL NICKS, SCRATCHES AND GOUGES IN METAL PARTS AS SHOWN IN DETAIL I AND APPLY METAL PROTECTIVE TREATMENT AS GIVEN IN SRM 51-10-2. NICKS, SCRATCHES AND GOUGES THAT DO NOT PENETRATE THROUGH THE CLADDED SURFACES CAN BE IGNORED.

Allowable Damage - Elevators
Figure 1 (Sheet 1)


BOEING PROPRIETARY - Copyright © - Unpublished Work - See title page for details.

NOTES (CONTINUED)

[A] ON ANY REFERENCE LINE A-B DRAWN BETWEEN RIB OR SPAR CHORDS, AS SHOWN IN DETAIL III, THE MAXIMUM ALLOWABLE CROSS SECTIONAL AREA REMOVED FROM THE WEB INCLUDING ALL FASTENER HOLES, SCRATCHES, AND GOUGES MUST NOT EXCEED 20% OF THE TOTAL CROSS SECTIONAL AREA BETWEEN A AND B.

ON ANY REFERENCE LINE I-J DRAWN THROUGH AN EXISTING LIGHTENING HOLE AS SHOWN IN DETAIL III, THE MAXIMUM ALLOWABLE CROSS SECTIONAL AREA REMOVED FROM THE WEB INCLUDING ALL FASTENER HOLES, SCRATCHES, AND GOUGES MUST NOT EXCEED 20% OF THE TOTAL CROSS SECTIONAL AREA BETWEEN I AND J.

[B] MAXIMUM DEPTH (X) OF A SCRATCH, GOUGE OR NICK MUST NOT EXCEED THE FOLLOWING. (SEE DETAIL I.)

20% OF SHEET THICKNESS FOR SPAR WEBS AND LE RIBS
25% OF SHEET THICKNESS FOR ALL ALUMINUM SKINS
20% OF FLANGE THICKNESS OR WIDTH FOR ALL RIB AND SPAR CHORDS

[C] THE MAXIMUM DEPTH OF DENT DAMAGE IN ALUMINUM WEBS AND SKINS MUST NOT EXCEED Y = 0.125. THE MAXIMUM A/Y RATIO MUST NOT BE LESS THAN 30 IN WEBS OR 10 IN SKINS. SEE DETAIL II.

A REPAIR IS REQUIRED WHEN THE ALUMINUM SKIN OR WEB HAS BEEN SUBJECTED TO DENT DAMAGE THAT EXCEEDS THE ABOVE DIMENSION AND WHEN THERE IS EVIDENCE OF PULLED OR LOOSE RIVETS, SHARP CREASES, GOUGES, SCRATCHES, WRINKLING, STRETCHING OR CRACKING.

[D] NO DENT DAMAGE IS ALLOWED ON RIB OR SPAR WEB STIFFENERS. REPLACE ALL STIFFENERS THAT SHOW DENT DAMAGE.

NO DENT DAMAGE IS ALLOWED ON RIB OR SPAR CHORD FLANGES. REPLACE OR REPAIR ALL RIB CHORDS THAT SHOW DENT DAMAGE.

[E] HOLE DAMAGE IN WEB STIFFENERS MUST NOT EXCEED THE LARGEST EXISTING RIVET OR BOLT FASTENER DIAMETER IN THE AREA OF THE DAMAGED PARTS OR EXCEED 20% OF THE FLANGE DIMENSION H. USE WHICHEVER VALUE IS SMALLER. FILL ALL HOLES WITH ALUMINUM RIVETS.

[F] REPAIR ALL HOLES PER 51-40-6 FIGURE 1 EXCEPT EXISTING DRAIN HOLES.

[G] ALL CRACKED PARTS MUST BE REPAIRED. SEE 51-10-1.

CRACKS AT FLANGE EDGES MUST BE REWORKED AS SHOWN IN DETAIL I.

TOTAL AREA REMOVED INCLUDING EXISTING FASTENER HOLES, SCRATCHES, GOUGES AND NICKS MUST NOT REDUCE THE TOTAL CROSS SECTIONAL AREA IN EXCESS OF 20%.

[H] IF THE FIBERS ARE DAMAGED, USE THE LIMITS APPLICABLE TO CRACKS. IF THE FIBERS ARE NOT DAMAGED, PROTECT THE DAMAGE AS GIVEN IN [J] .

[I] DENTS FREQUENTLY CAUSE FIBER DAMAGE OR DELAMINATION WHICH IS POSSIBLY NOT APPARENT BY THE USE OF VISUAL OR TAP TEST METHODS OF INSPECTION. DENTS UP TO 0.50 INCH DIAMETER MAXIMUM (D) ARE PERMITTED. DENTS MUST BE A MINIMUM OF 4D (EDGE TO EDGE) FROM ANY OTHER DAMAGE, FASTENER HOLE OR EDGE OF A PART. REFER TO NOTE [J].

[J] IT IS RECOMMENDED TO REMOVE MOISTURE FROM THE DAMAGED AREA. USE VACUUM AND HEAT (A MAXIMUM OF 150°F [66°C]) TO REMOVE THAT MOISTURE.

CLEAN THE DAMAGED AREA. SEAL THE DAMAGED AREA WITH ALUMINUM FOIL TAPE (SPEED TAPE) 3M-Y436 OR AN EQUIVALENT. KEEP THE QUANTITY OF SPEED TAPE TO A MINIMUM. THE AMOUNT OF SPEED TAPE CAN CHANGE THE BALANCE MOMENT OF THE ELEVATOR. IF NECESSARY, BALANCE THE ELEVATOR. REFER TO SRM 51-80-4.

KEEP A RECORD OF THE LOCATION WHERE SPEED TAPE IS INSTALLED. MAKE AN INSPECTION OF THAT LOCATION NO MORE THAN 65 FLIGHT HOURS AFTER THE TAPE IS APPLIED. REPLACE THE TAPE IF IT STARTS TO COME OFF OR DETERIORATION IS FOUND. REPAIR THE DAMAGE NO MORE THAN 60 CALENDAR DAYS AFTER THE TAPE IS APPLIED. IF THE DAMAGE BECOMES LARGER IN LESS THAN 60 CALENDAR DAYS, REPAIR THE DAMAGE NO MORE THAN FIVE FLIGHTS AFTER THAT.

Allowable Damage - Elevators
Figure 1 (Sheet 2)

NOTES (CONTINUED)

[K] DELAMINATION IS PERMITTED UP TO 1.0 SQUARE INCH FOR A SQUARE FOOT OF PANEL AREA. THE DAMAGE MUST BE 6 INCHES MINIMUM FROM OTHER DAMAGE AND 1.0 INCH MINIMUM FROM A HOLE OR MATERIAL EDGE. DELAMINATION IS PERMITTED UP TO 0.10 INCH FROM A PANEL EDGE. [J]

CRACKS AND DELAMINATIONS ON THE EDGE UP TO A MAXIMUM LENGTH OF 2.0 INCHES AND A DEPTH OF 0.5 INCH CAN BE SEALED AS FOLLOWS:

- APPLY ONE LAYER OF SPEED TAPE WHICH EXTENDS OUT 2 INCHES ALL AROUND THE DAMAGE
- APPLY A SECOND LAYER OF SPEED TAPE WHICH EXTENDS OUT 1.00 INCH ALL AROUND THE EDGES OF THE FIRST LAYER OF SPEED TAPE.

THESE DAMAGE LOCATIONS MUST BE A MINIMUM OF 10 TIMES THE DAMAGE LENGTH (EDGE TO EDGE) FROM OTHER DAMAGE LOCATIONS.

[L] 1.0 SQUARE INCH IS PERMITTED WITHOUT REWORK. [J]

[M] REMOVE CRACKS ON AN EDGE AS SHOWN IN DETAILS IV, V AND VI. CRACKS IN THE HONEYCOMB AREA ARE PERMITTED TO A LENGTH OF 0.50 INCH. THE DAMAGE MUST BE A MINIMUM OF 6.0 INCHES FROM OTHER DAMAGE, THE NEAREST FASTENER HOLE, OR THE MATERIAL EDGE. [J] [K]

[N] REMOVE CRACKS ON AN EDGE AS SHOWN IN DETAILS IV, V AND VI. OTHER CRACKS ARE NOT PERMITTED.

Allowable Damage - Elevators
Figure 1 (Sheet 2A)

| ITEM | LOCATION OF DAMAGE | | TYPE OF DAMAGE | | | | |
|---|---|---|---|---|---|---|---|
| | | | CRACKS | NICK AND GOUGES | DENTS | HOLE | DELAMINATION |
| 1 | LEADING EDGE RIB | WEBS | G | SEE DETAIL I A B | SEE DETAIL II C D | SEE DETAIL III A | — |
| 2 | INTERSPAR RIB | WEBS | | SEE DETAIL I A B | SEE DETAIL II C | SEE DETAIL III A | — |
| | | CHORDS | | SEE DETAIL I B | D | | — |
| | | WEB STIFFENERS | | SEE DETAIL I B | D | SEE DETAIL III E | — |
| 3 | FRONT SPAR | WEBS | | SEE DETAIL I A B | SEE DETAIL II C | SEE DETAIL III A | — |
| | | CHORDS | | SEE DETAIL I B | D | | |
| | | WEB STIFFENERS | | SEE DETAIL I B | D | SEE DETAIL III E | |
| 4 | REAR SPAR | WEBS (CHANNELS) | | SEE DETAIL I A B | D | | — |
| 5 | TRAILING EDGE SKIN | | | H | | F | K |
| 6 | LEADING EDGE SKIN | | | SEE DETAIL I B | SEE DETAIL II C | NO HOLES ALLOWED. REPLACE OR REPAIR AS REQUIRED | L |

ALLOWABLE DAMAGE INDEX

Allowable Damage - Elevators
Figure 1 (Sheet 3)

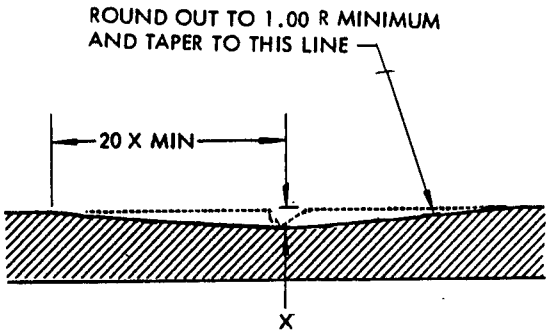


SECTION THROUGH GOUGE

X = DEPTH OF GOUGE

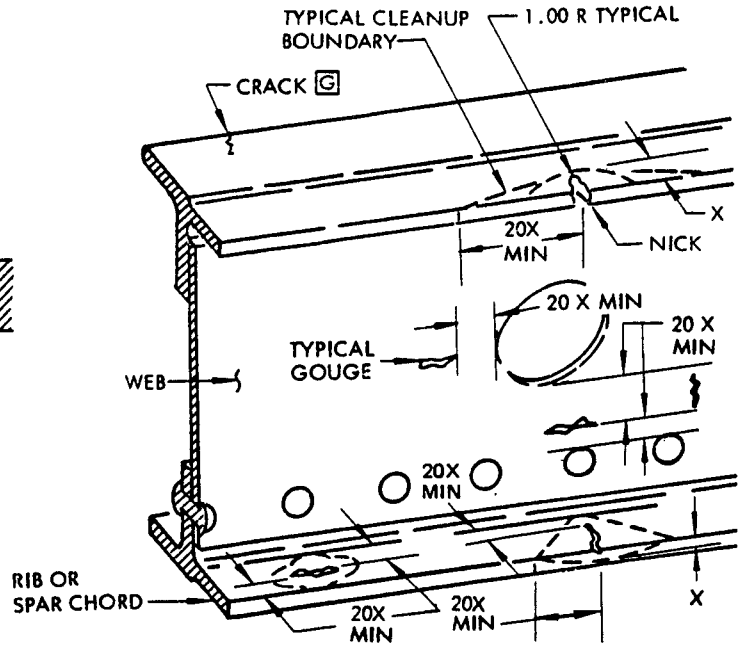


NICKS, GOUGES AND FLANGE EDGE CRACKS
DETAIL I

Y = DEPTH OF DENT FROM CONTOUR

T = THICKNESS OR GAGE OF PART

A = DIAMETER OF DENT

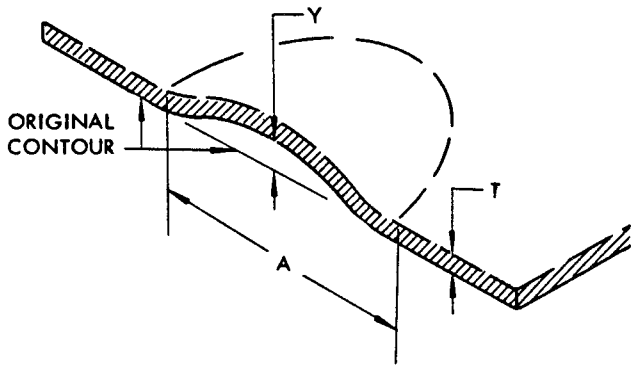


SECTION THROUGH DENT

DETAIL II

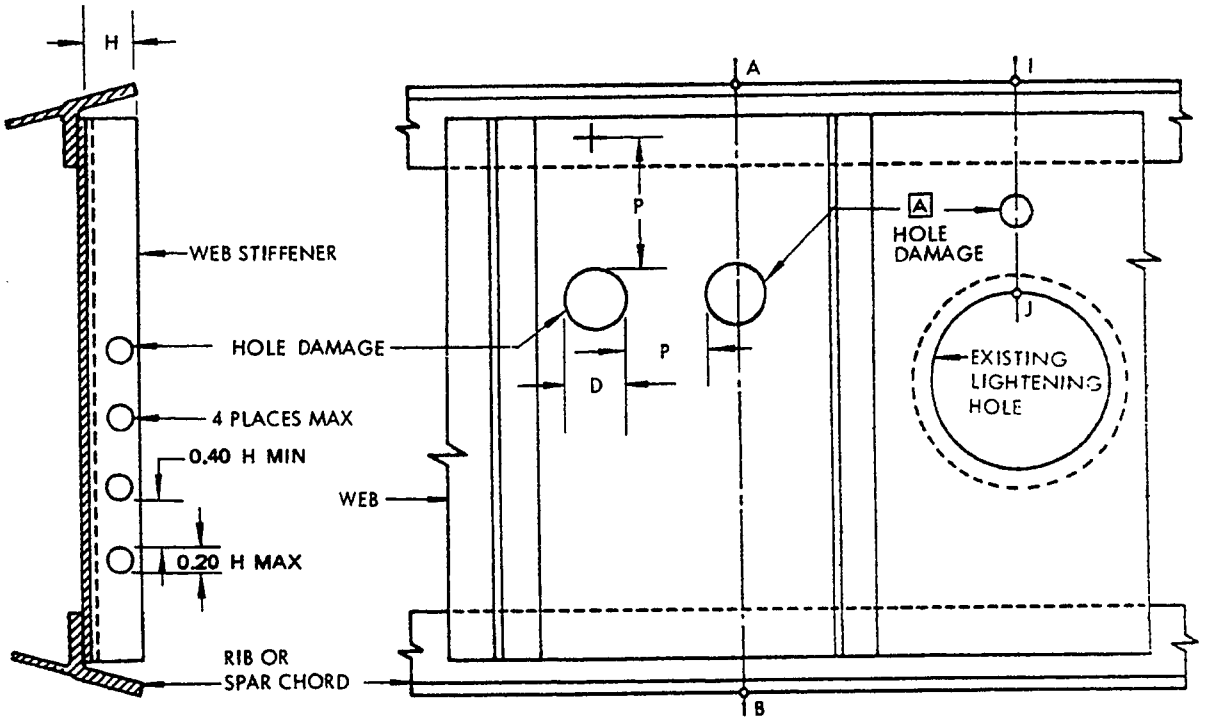


A,B,I,J = REFERENCE POINTS
D = ANY HOLE SIZE UP TO AND INCLUDING 1.00 DIA MAX
H = WIDTH OF STIFFENER FLANGE
P = 2 X D MIN

ALLOWABLE DAMAGE LIMITS FOR HOLES
DETAIL III

Allowable Damage - Elevators
Figure 1 (Sheet 5)

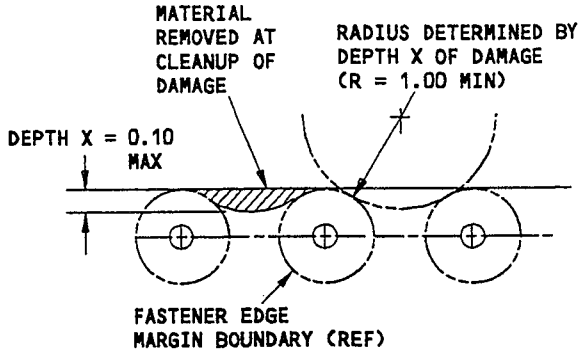


DAMAGE CLEANUP OF EDGES WHERE FASTENER EDGE MARGINS DO NOT OVERLAP

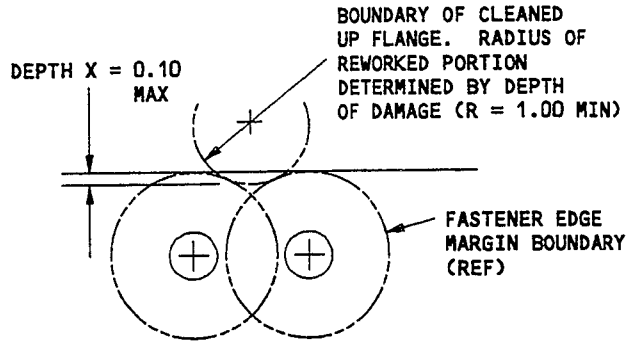


DAMAGE CLEANUP OF EDGES WHERE FASTENER EDGE MARGINS OVERLAP

DETAIL IV

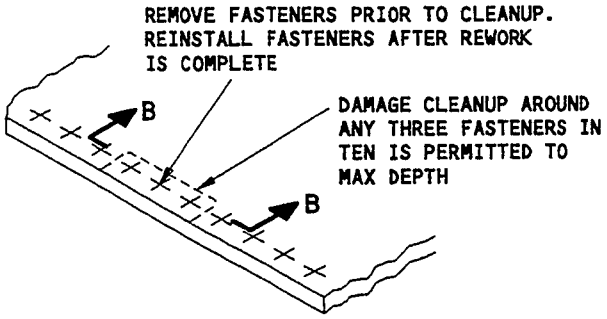


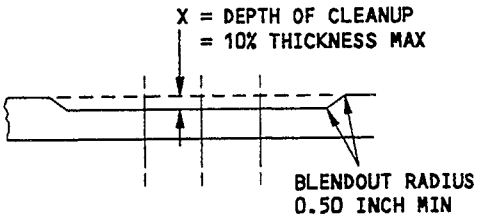


SECTION B-B

DAMAGE CLEANUP
DETAIL V

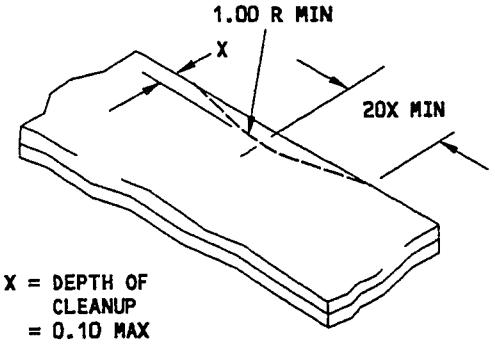


REMOVAL OF DAMAGE ON AN EDGE
DETAIL VI

Allowable Damage - Elevator
Figure 1 (Sheet 6)

E36379

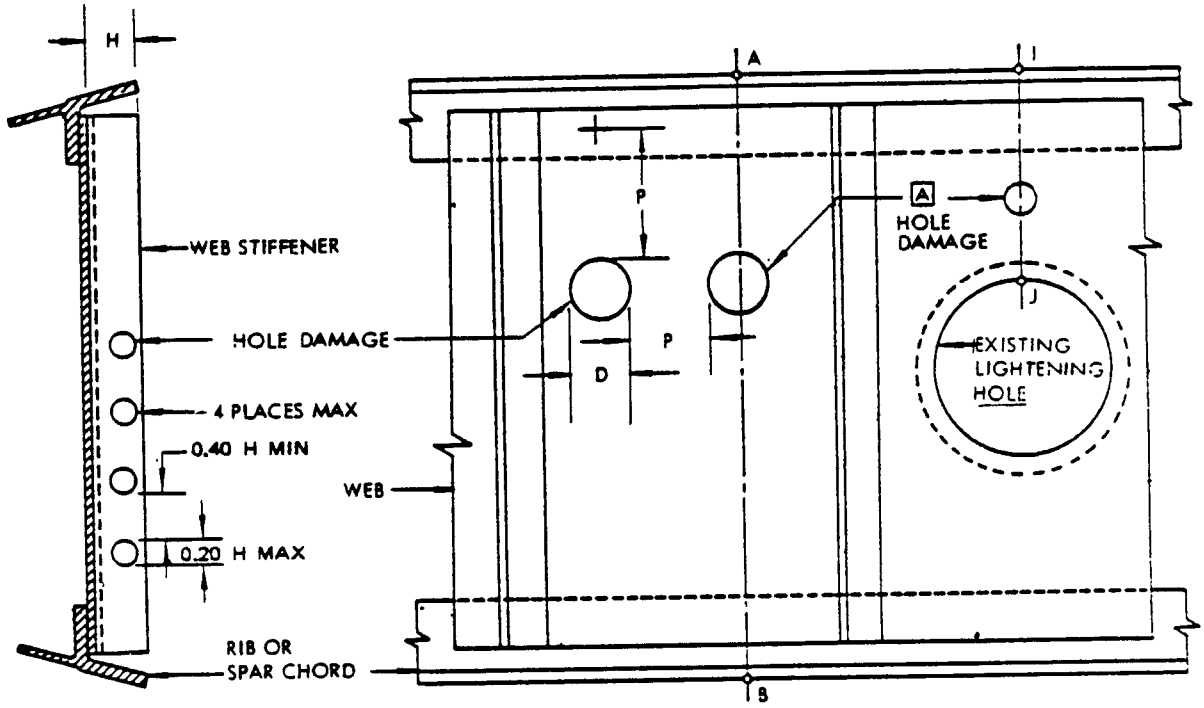


A,B,I,J = REFERENCE POINTS
D = ANY HOLE SIZE UP TO AND INCLUD-
ING 1.00 DIA MAX
H = WIDTH OF STIFFENER FLANGE
P = 2 X D MIN

ALLOWABLE DAMAGE LIMITS FOR HOLES
DETAIL III

Allowable Damage - Elevators
Figure 1 (Sheet 5)

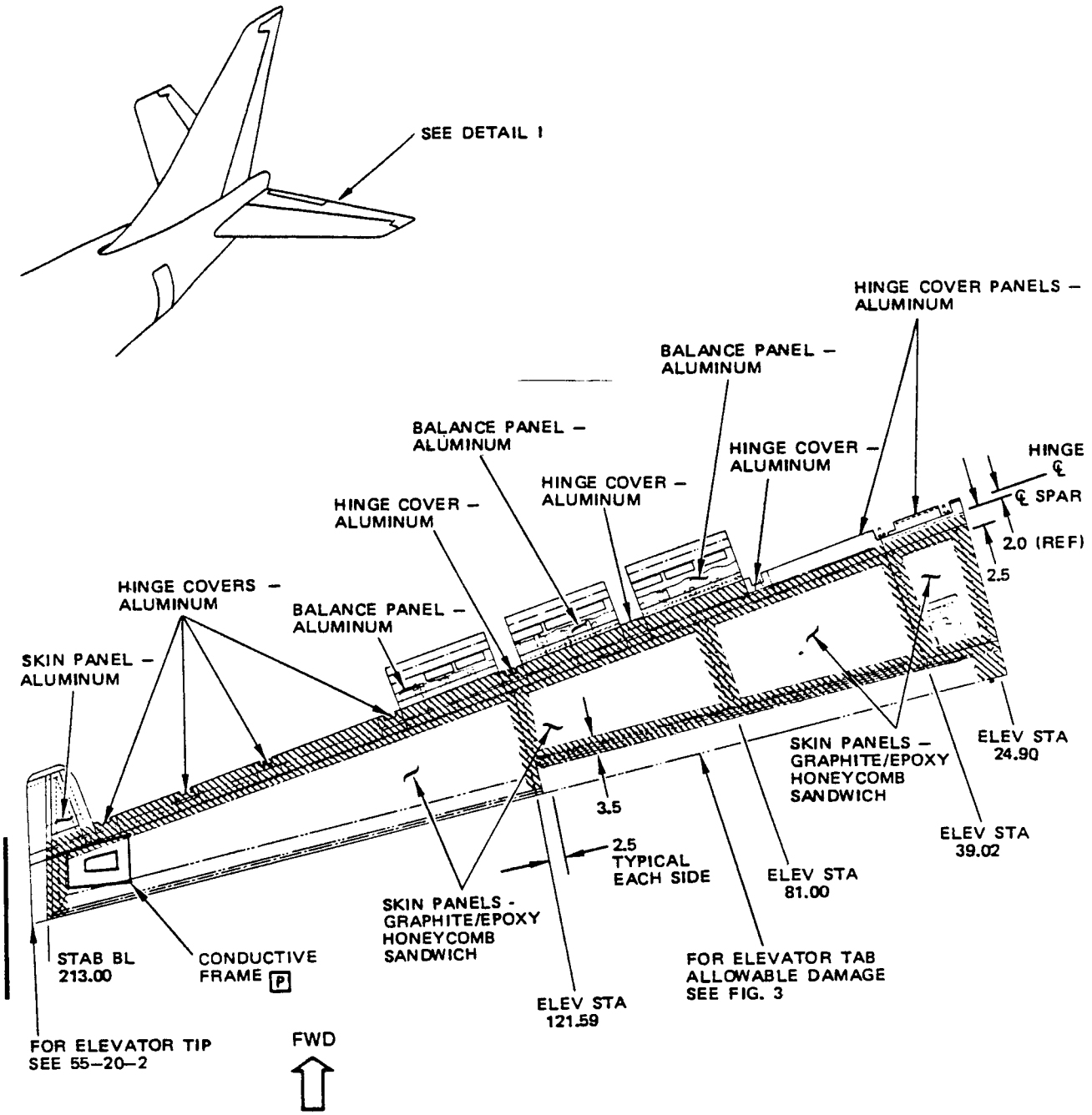


UPPER SURFACE SHOWN
LOWER SURFACE OPPOSITE

DETAIL I

CRITICAL AREAS (SHADED) CONTACT THE BOEING COMPANY FOR ALLOWABLE DAMAGE

Elevator Skin Allowable Damage (Graphite Composite Elevator)
Figure 2 (Sheet 1)

| DESCRIPTION | CRACKS | NICKS, GOUGES, SCRATCHES AND CORROSION | DENTS | HOLES AND PUNCTURES | DELAMINATION |
|---|---|---|---|---|---|
| SKIN PANELS GRAPHITE/EPOXY HONEYCOMB | B | D | F | H | J |
| BALANCE PANELS - ALUMINUM | C | E | G | I | — |
| HINGE COVERS - ALUMINUM | C | E | G | I | — |
| LE SKIN PANEL - ALUMINUM | C | E | G | I | — |
| CONDUCTIVE FRAME A | L | M | N | NOT PERMITTED | O |

ALLOWABLE DAMAGE FOR DETAIL I

## NOTES

- THE ALLOWABLE DAMAGE LIMITS GIVEN IN THIS FIGURE WILL NOT HAVE AN EFFECT ON A STRUCTURALLY SIGNIFICANT ITEM (SSI) GIVEN IN SRM 51-00-4, FIG. 3. THUS, NO CHANGE TO THE SUPPLEMENTAL STRUCTURAL INSPECTION DOCUMENT (SSID) INSPECTION PROGRAM IS NECESSARY.
- FOR INVESTIGATION AND CLEANUP OF DAMAGE REFER TO SRM 51-10.
- FOR REWORKED ALUMINUM AREAS APPLY A CHEMICAL CONVERSION COATING AS GIVEN IN SRM 51-10-2.
- REFINISH REWORKED AREAS AS GIVEN IN AMM 51-20.
- TYPICAL DAMAGE TO A PANEL EDGEBAND MAY CONSIST OF EDGE CRUSHING, CRACKS OR DELAMINATION. DAMAGE AROUND HOLES MAY CONSIST OF OVALIZATION, FASTENER PULL-THROUGH OR CRACKS OUT OF HOLE. DAMAGE MAY REDUCE THE EFFECTIVE CROSS SECTIONAL AREA OF AN EDGEBAND. DAMAGE TO EDGES SHOULD BE BLENDED OUT TO LIMITATIONS GIVEN FOR COMPONENT.
- D = MAXIMUM DAMAGE DIMENSION.

A THE CONDUCTIVE FRAME IS MADE OF SOFT ALUMINUM MATERIAL AND SHOULD HAVE PROTECTIVE COVERING WHEN WORK ACTIVITY IS OCCURING IN IMMEDIATE AREA. A DENT IN THE CONDUCTIVE FRAME MAY RESULT IN DAMAGE TO UNDERSTRUCTURE. SEE F FOR APPLICABLE DENT DAMAGE TO SKIN PANELS.

B EDGE CRACKS MUST BE REMOVED AS GIVEN IN DETAILS I AND V. 0.50 INCH MAXIMUM LENGTH IN HONEYCOMB AREA IS PERMITTED IF DAMAGE IS A MINIMUM OF 6.0 INCHES FROM OTHER DAMAGE, HOLE, OR PART EDGE K.

C REMOVE EDGE CRACKS AS GIVEN IN DETAILS II AND VI. OTHER CRACKS ARE NOT PERMITTED.

D IF FIBERS ARE DAMAGED, TREAT AS A CRACK. IF FIBERS ARE NOT DAMAGED PROTECT AS GIVEN IN NOTE K.

E NICKS, GOUGES, SCRATCHES, AND CORROSION REMOVED AS GIVEN IN DETAILS II, III, V, AND VI ARE PERMITTED IF THE MAXIMUM PERMISSIBLE DEPTH OF DAMAGE IS NOT EXCEEDED. NICKS, GOUGES, AND SCRATCHES THAT DO NOT PENETRATE ALL THE WAY THROUGH CLAD SURFACES CAN BE IGNORED. INSPECT CLAD PENETRATION DEPTH AS GIVEN IN SRM 51-10-02.

F DENTS GENERALLY RESULT IN FIBER DAMAGE OR DELAMINATION WHICH MAY NOT BE APPARENT USING VISUAL OR TAP TESTING METHODS OF DETECTION. DENTS UP TO 0.5 INCH DIAMETER MAXIMUM (D) ARE ALLOWED BUT MUST BE A MINIMUM OF 6.0 INCHES (EDGE TO EDGE) FROM ANY OTHER DAMAGE, FASTENER HOLE OR PART EDGE. TREAT AS GIVEN IN NOTE K. IF FIBER DAMAGE OR DELAMINATION IS DETECTED REFER TO APPLICABLE DAMAGE DATA IN TABLE K.

G DENTS PERMITTED AS SHOWN IN DETAIL IV.

H 0.50 INCH MAXIMUM DIAMETER PERMITTED IF DAMAGE IS A MINIMUM OF 6D FROM OTHER DAMAGE, NEAREST HOLE OR MATERIAL EDGE. DO NOT CLEAN UP DAMAGE EXCEPT TO REMOVE RESIN BURRS EXTENDING INTO SURFACE CONTOUR K.

I CLEAN OUT PUNCTURE UP TO 0.25 INCH MAXIMUM DIAMETER HOLE AND NOT CLOSER THAN 1.0 INCH TO FASTENER HOLE, PART EDGE, OR OTHER DAMAGE. FILL HOLE WITH A 2117-T3 OR T4 ALUMINUM RIVET INSTALLED WET WITH BMS 5-95 SEALANT. ALL OTHER HOLES TO BE REPAIRED.

Elevator Skin Allowable Damage (Graphite Composite Elevator)
Figure 2 (Sheet 2)


BOEING PROPRIETARY - Copyright © - Unpublished Work - See title page for details.

NOTES (CONT)

[J] DELAMINATION IS PERMITTED UP TO A DIAMETER OF 0.50 INCH IN EACH SQUARE FOOT OF PANEL AREA. THE DAMAGE MUST BE A MINIMUM OF 6.0 INCHES FROM OTHER DAMAGE AND 1.0 INCH FROM A HOLE OR THE EDGE OF THE MATERIAL. EDGE DELAMINATION IS PERMITTED UP TO 0.10 INCH FROM THE EDGE OF THE MATERIAL. [K] [Q]

[K] IT IS RECOMMENDED TO REMOVE MOISTURE FROM THE DAMAGED AREA. USE VACUUM AND HEAT (A MAXIMUM OF 150°F [66°C]) TO REMOVE THAT MOISTURE.

CLEAN THE DAMAGED AREA. SEAL THE DAMAGED AREA WITH ALUMINUM FOIL TAPE (SPEED TAPE) 3M-Y436 OR AN EQUIVALENT. KEEP THE QUANTITY OF SPEED TAPE TO A MINIMUM. THE AMOUNT OF SPEED TAPE CAN CHANGE THE BALANCE MOMENT OF THE ELEVATOR. IF NECESSARY, BALANCE THE ELEVATOR. REFER TO SRM 51-81-4.

KEEP A RECORD OF THE LOCATION WHERE SPEED TAPE IS INSTALLED. MAKE AN INSPECTION OF THAT LOCATION NO MORE THAN 65 FLIGHT HOURS AFTER THE TAPE IS APPLIED. REPLACE THE TAPE IF IT STARTS TO COME OFF OR DETERIORATION IS FOUND. REPAIR THE DAMAGE NO MORE THAN 60 CALENDAR DAYS AFTER THE TAPE IS APPLIED. IF THE DAMAGE BECOMES LARGER IN LESS THAN 60 CALENDAR DAYS, REPAIR THE DAMAGE NO MORE THAN FIVE FLIGHTS AFTER THAT.

[L] CRACKS NOT ALLOWED EXCEPT FOR EDGE CRACKS WHICH MUST BE CLEANED UP PER DETAIL VI. NO CRACKS ALLOWED WHERE FRAME CONTACTS JUMPER BRACKETS.

[M] NICKS, GOUGES, SCRATCHES, OR CORROSION REMOVED PER DETAILS III AND VI ARE ALLOWED PROVIDED THE MAXIMUM PERMISSIBLE DEPTH OF DAMAGE IS NOT EXCEEDED.

[N] ONE DENT PER DETAIL IV ALLOWED PER SIDE OF FRAME [A] .

[O] DISBONDING OF FRAME FROM SKIN PANEL UP TO 1.0 INCH MAXIMUM DIMENSION IS ALLOWED PROVIDED DELAMINATION IS A MINIMUM OF 1.0 INCH FROM ANY EDGE, HOLE, OR OTHER DAMAGE. [K]

[P] REFER TO 55-20-2 FOR EFFECTIVITY.

[Q] CRACKS AND DELAMINATIONS ON THE EDGE TO A LENGTH OF 2 INCHES AND A DEPTH OF 0.5 INCH CAN BE SEALED AS FOLLOWS:

- APPLY ONE LAYER OF SPEED TAPE THAT EXTENDS OUT 2 INCHES ALL AROUND THE DAMAGE
- APPLY A SECOND LAYER OF SPEED TAPE THAT EXTENDS OUT 1 INCH ALL AROUND THE EDGES OF THE FIRST LAYER OF SPEED TAPE.

DAMAGE LOCATIONS MUST BE A MINIMUM OF 10 TIMES THE DAMAGE LENGTH (EDGE TO EDGE) FROM THE NEAREST HOLE, OTHER DAMAGE LOCATIONS, OR THE MATERIAL EDGE. [K]

Elevator Skin Allowable Damage (Graphite Composite Elevator)
Figure 2 (Sheet 3)


BOEING PROPRIETARY - Copyright © - Unpublished Work - See title page for details.

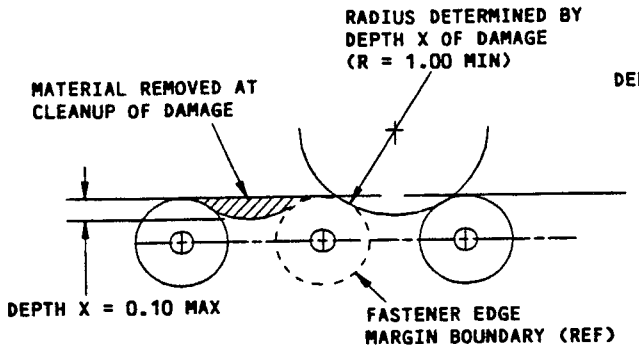


DAMAGE CLEANUP OF EDGES WHERE
FASTENER EDGE MARGINS DO NOT OVERLAP

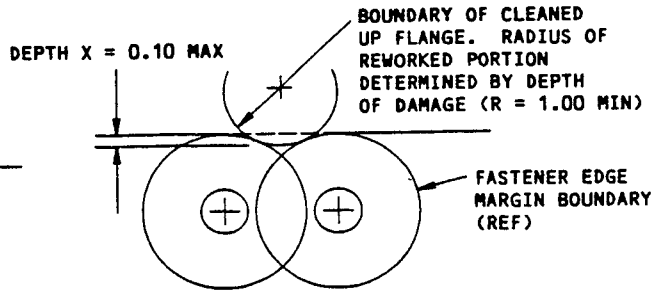


DAMAGE CLEANUP OF EDGES WHERE
FASTENER EDGE MARGINS OVERLAP

DETAIL II

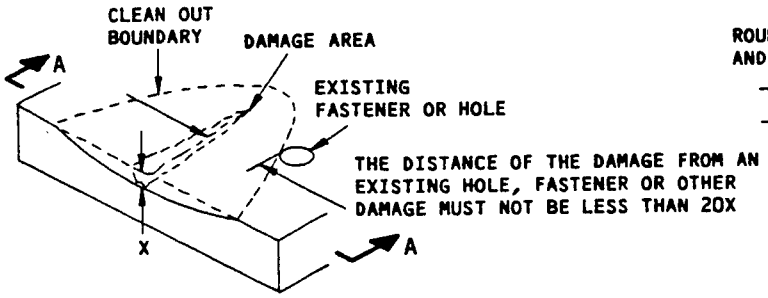


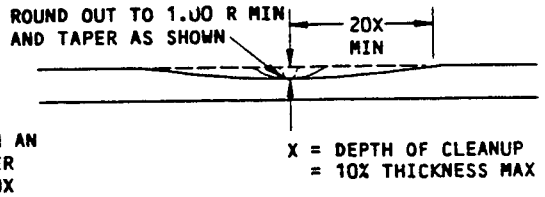


SECTION A-A

REMOVAL OF NICK, GOUGE, SCRATCH, AND CORROSION DAMAGE ON A SURFACE
(DAMAGE AT EDGE SHOWN; DAMAGE AWAY FROM EDGE SIMILAR)

DETAIL III

Elevator Skin Allowable Damage (Graphite Composite Elevator)
Figure 2 (Sheet 4)

141554

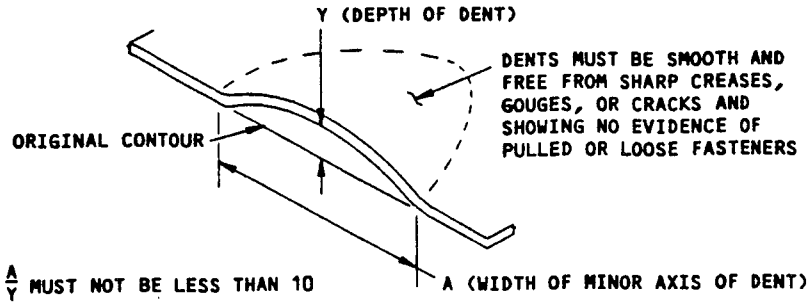


ALLOWABLE DAMAGE FOR DENT
DETAIL IV

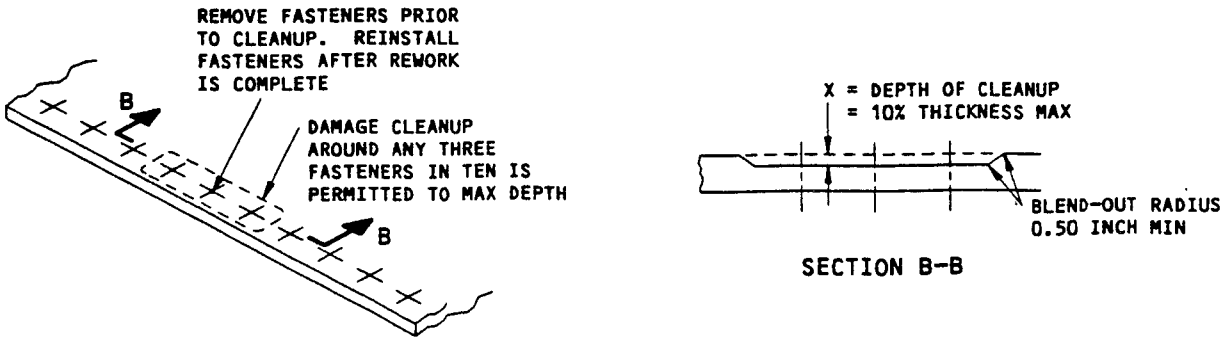


SECTION B-B

DAMAGE CLEANUP
DETAIL V

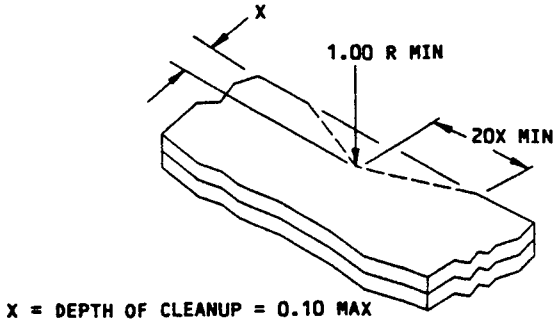


REMOVAL OF DAMAGE ON AN EDGE
DETAIL VI

Elevator Skin Allowable Damage (Graphite Composite Elevator)
Figure 2 (Sheet 5)

141558

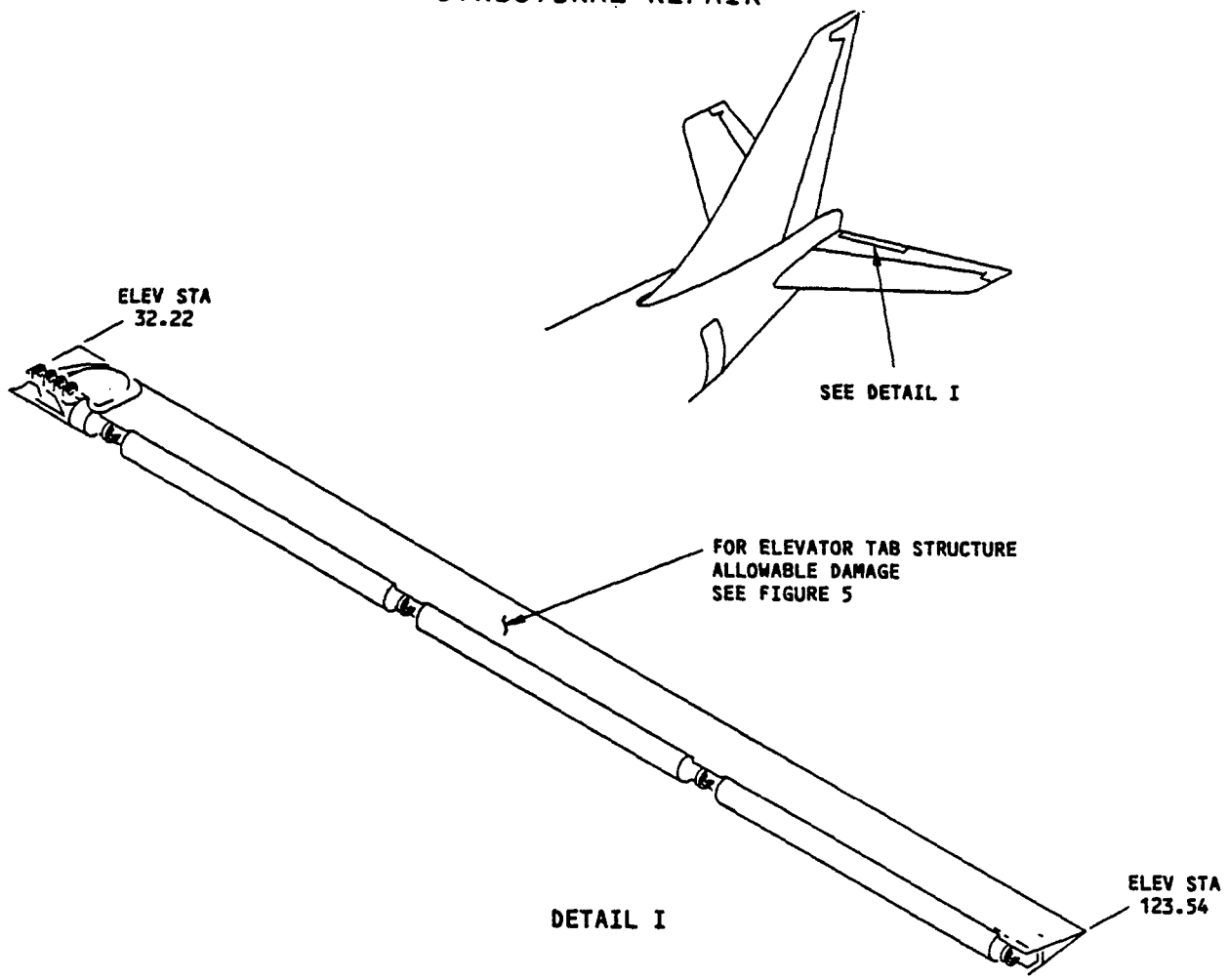


DETAIL I

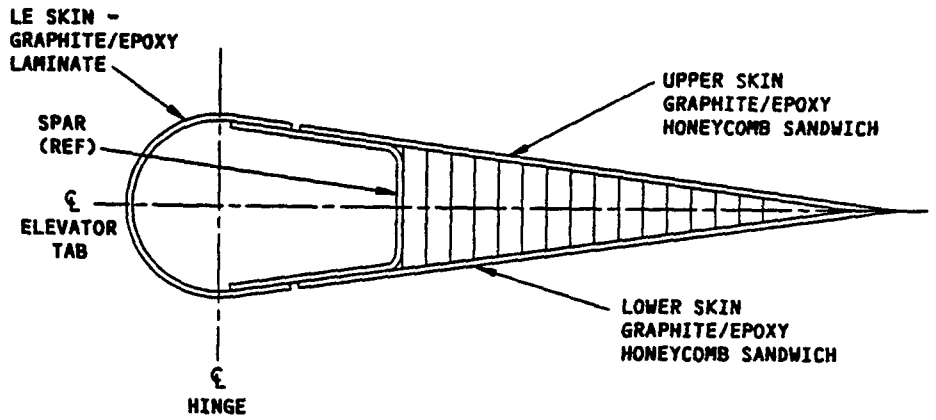


SECTION THRU ELEVATOR TAB

Elevator Tab Skin Allowable Damage (Graphite Composite Elevator)
Figure 3 (Sheet 1)

141564

| DESCRIPTION | CRACKS | NICKS, GOUGES, SCRATCHES AND CORROSION | DENTS | HOLES AND PUNCTURES | DELAMINATION |
|---|---|---|---|---|---|
| LE SKIN - GRAPHITE/ EPOXY LAMINATE | B | D | E | F | H |
| UPR AND LWR SKIN PANEL - GRAPHITE/EPOXY HONEYCOMB SANDWICH | C | D | G | F | H |

ALLOWABLE DAMAGE FOR DETAIL I

NOTES

- THE ALLOWABLE DAMAGE LIMITS GIVEN IN THIS FIGURE WILL NOT HAVE AN EFFECT ON A STRUCTURALLY SIGNIFICANT ITEM (SSI) GIVEN IN SRM 51-00-4, FIG. 3. THUS, NO CHANGE TO THE SUPPLEMENTAL STRUCTURAL INSPECTION DOCUMENT (SSID) INSPECTION PROGRAM IS NECESSARY.
- FOR INVESTIGATION AND CLEANUP OF DAMAGE REFER TO SRM 51-10.
- REFER TO SRM 51-70 FOR AERODYNAMIC SMOOTHNESS REQUIREMENTS. WHERE THE DAMAGE EXCEEDS THE LIMITS SHOWN IN SRM 51-70, CONSIDERATION SHOULD BE GIVEN TO THE LOSS OF PERFORMANCE INVOLVED.
- REFINISH REWORKED AREAS AS GIVEN IN AMM 51-20.
- D = MAXIMUM DAMAGE DIMENSION.
- TYPICAL DAMAGE TO A PANEL EDGEBAND OR LAMINATE EDGE CAN CONSIST OF EDGE CRUSHING, CRACKS OR DELAMINATION. DAMAGE AROUND HOLES CAN CONSIST OF OVALIZATION, FASTENER PULL-THROUGH OR CRACKS OUT OF HOLE. DAMAGE CAN REDUCE THE EFFECTIVE CROSS SECTIONAL AREA OF AN EDGE OR EDGEBAND. DAMAGE TO EDGES SHOULD BE BLENDED OUT TO LIMITATIONS GIVEN FOR COMPONENT.

A IT IS RECOMMENDED TO REMOVE MOISTURE FROM THE DAMAGED AREA. USE VACUUM AND HEAT (A MAXIMUM OF 150°F (66°C) TO REMOVE THAT MOISTURE.

CLEAN THE DAMAGED AREA. SEAL THE DAMAGED AREA WITH ALUMINUM FOIL TAPE (SPEED TAPE) 3M-Y436 OR AN EQUIVALENT. KEEP THE QUANTITY OF SPEED TAPE TO A MINIMUM. THE AMOUNT OF SPEED TAPE CAN CHANGE THE BALANCE MOMENT OF THE ELEVATOR. IF NECESSARY, BALANCE THE ELEVATOR. REFER TO SRM 51-81-6.

KEEP A RECORD OF THE LOCATION WHERE SPEED TAPE IS INSTALLED. MAKE AN INSPECTION OF THAT LOCATION NO MORE THAN 65 FLIGHT HOURS AFTER THE TAPE IS APPLIED. REPLACE THE TAPE IF IT STARTS TO COME OFF OR DETERIORATION IS FOUND. REPAIR THE DAMAGE NO MORE THAN 60 CALENDAR DAYS AFTER THE TAPE IS APPLIED. IF THE DAMAGE BECOMES LARGER IN LESS THAN 60 CALENDAR DAYS, REPAIR THE DAMAGE NO MORE THAN FIVE FLIGHTS AFTER THAT.

B EXCEPT FOR EDGE CRACKS, 0.50 MAX LENGTH OF DAMAGE IS PERMITTED IF DAMAGE IS A MINIMUM OF 6.0 INCHES FROM OTHER DAMAGE AND 2.0 INCHES MINIMUM FROM A HOLE OR PART EDGE. EDGE DAMAGE MUST BE REMOVED AS SHOWN IN DETAILS II AND III A.

C EDGE CRACKS MUST BE REMOVED AS SHOWN IN DETAILS II AND III. 0.50 INCH MAXIMUM LENGTH IN REMAINDER OF HONEYCOMB PANEL IS PERMITTED IF DAMAGE IS A MINIMUM OF 6.0 INCHES FROM OTHER DAMAGE AND 3.0 INCHES MINIMUM FROM A HOLE OR PART EDGE A.

D IF FIBERS ARE DAMAGED, TREAT AS A CRACK. IF FIBERS ARE NOT DAMAGED PROTECT PER NOTE A.

E DENTS GENERALLY RESULT IN FIBER DAMAGE OR DELAMINATION WHICH MAY NOT BE APPARENT USING VISUAL OR TAP TESTING METHODS OF DETECTION. DENTS UP TO 0.5 INCH DIAMETER MAXIMUM (D) ARE PERMITTED BUT MUST BE A MINIMUM OF 6.0 INCHES (EDGE TO EDGE) FROM OTHER DAMAGE AND 2.0 INCHES FROM A FASTENER HOLE OR PART EDGE. TREAT AS GIVEN IN NOTE A. IF FIBER DAMAGE OR DELAMINATION IS DETECTED REFER TO APPLICABLE DAMAGE DATA IN TABLE A.

F 0.50 INCH MAXIMUM DIAMETER PERMITTED IF DAMAGE IS MINIMUM OF 6.0D FROM OTHER DAMAGE, NEAREST HOLE OR MATERIAL EDGE. DO NOT CLEAN UP DAMAGE EXCEPT TO REMOVE RESIN BURRS EXTENDING INTO SURFACE CONTOUR A.

Elevator Tab Skin Allowable Damage (Graphite Composite Elevator)
Figure 3 (Sheet 2)


BOEING PROPRIETARY - Copyright © - Unpublished Work - See title page for details.

NOTES (CONTINUED)

[G] DENTS GENERALLY RESULT IN FIBER DAMAGE OR DELAMINATION WHICH MAY NOT BE APPARENT USING VISUAL OR TAP TESTING METHODS OF DETECTION. DENTS UP TO 0.5 INCH DIAMETER MAXIMUM (D) ARE PERMITTED BUT MUST BE A MINIMUM OF 6.0 INCHES (EDGE TO EDGE) FROM ANY OTHER DAMAGE AND 3.0 INCHES FROM ANY FASTENER HOLE OR PART EDGE. TREAT AS GIVEN IN NOTE [A]. IF FIBER DAMAGE OR DELAMINATION IS FOUND, REFER TO THE APPLICABLE DAMAGE DATA IN TABLE [A].

[H] DELAMINATION IS PERMITTED UP TO A DIAMETER OF 0.50 INCH IN EACH SQUARE FOOT OF PANEL AREA. THE DAMAGE MUST BE A MINIMUM OF 6.0 INCHES FROM OTHER DAMAGE AND 1.0 INCH FROM A HOLE OR THE EDGE OF THE MATERIAL. EDGE DELAMINATION IS PERMITTED UP TO 0.10 INCH FROM THE EDGE OF THE MATERIAL. [A] [I]

[I] IT IS RECOMMENDED TO REMOVE MOISTURE FROM THE DAMAGED AREA. USE VACUUM AND HEAT (A MAXIMUM OF 150°F [66°C]) TO REMOVE THAT MOISTURE FROM THE HONEYCOMB CELLS.

CLEAN THE DAMAGED SURFACE. APPLY A SEALING RESIN AS SHOWN IN SRM 51-70-03. THE AMOUNT OF RESIN USED CAN CHANGE THE BALANCE MOMENT OF THE ELEVATOR TAB. IF NECESSARY, BALANCE THE ELEVATOR TAB. REFER TO SRM 51-60-06.

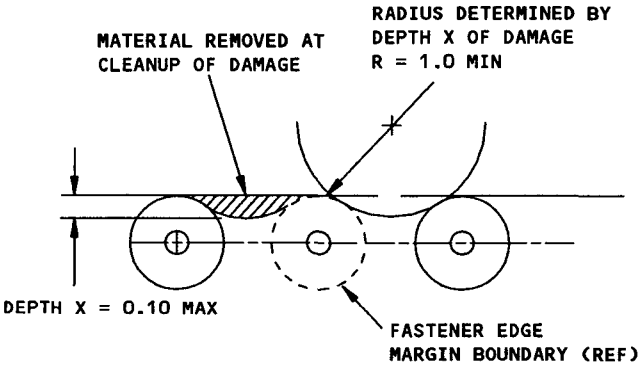


DAMAGE CLEANUP OF EDGES WHERE FASTENER EDGE MARGINS DO NOT OVERLAP

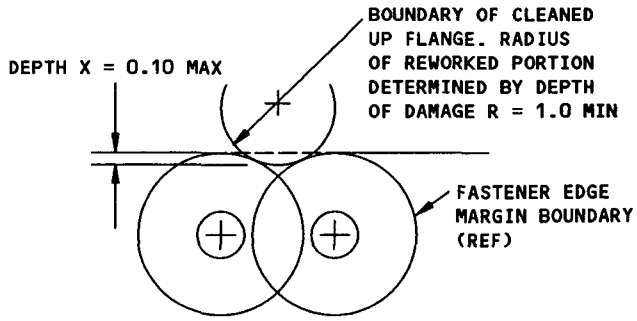


DAMAGE CLEANUP OF EDGES WHERE FASTENER EDGE MARGINS OVERLAP

DETAIL II

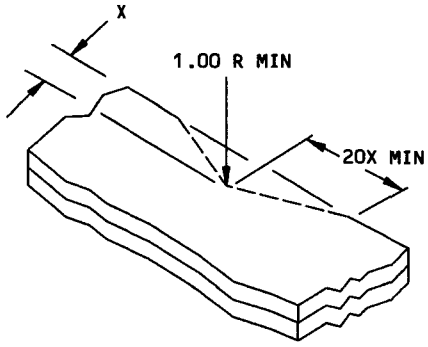


X = DEPTH OF CLEANUP = 0.10 MAX

REMOVAL OF DAMAGE ON AN EDGE

DETAIL III

Elevator Tab Skin Allowable Damage (Graphite Composite Elevator)
Figure 3 (Sheet 3)



BOEING PROPRIETARY - Copyright © - Unpublished Work - See title page for details.

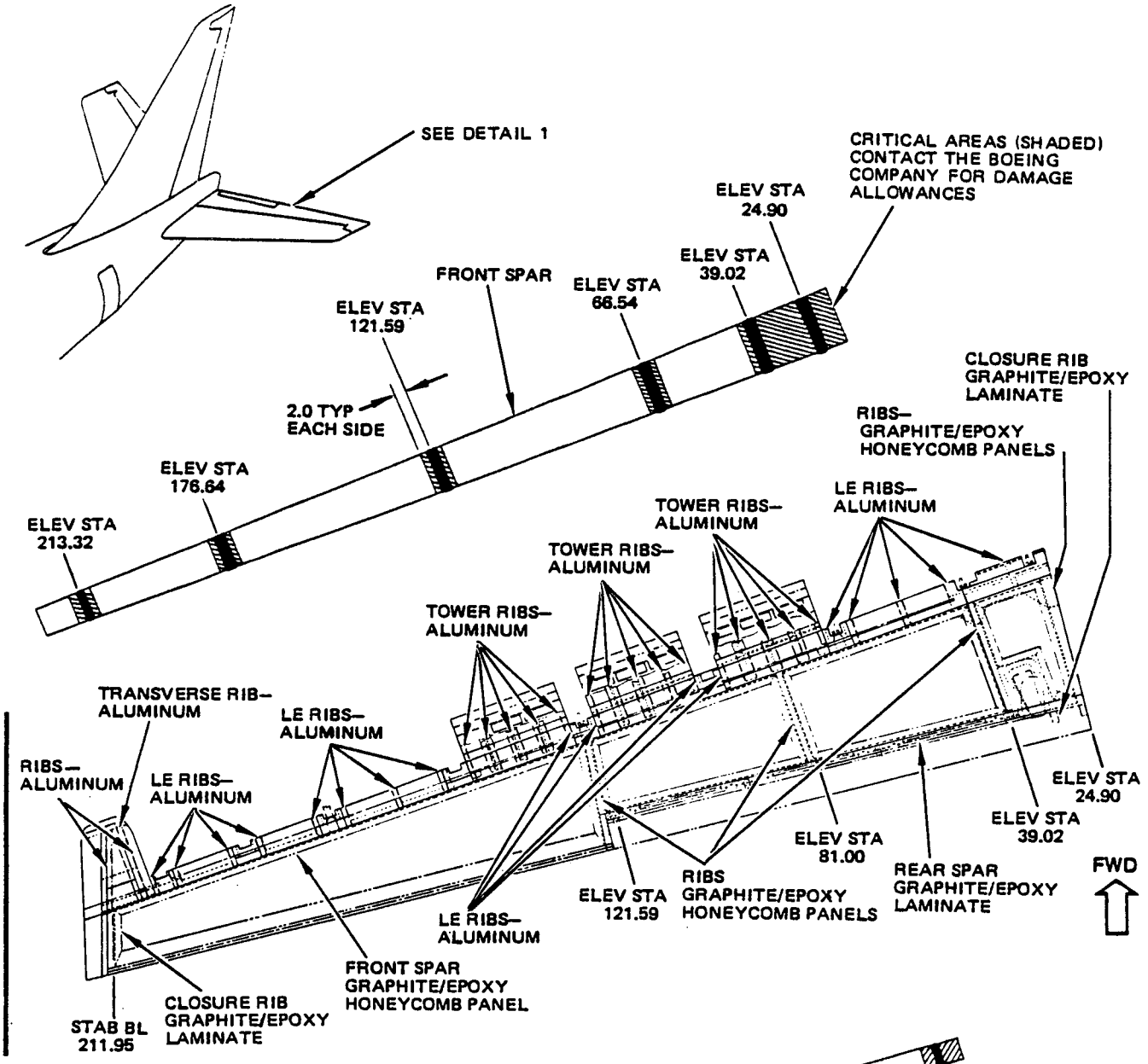


DETAIL I

Elevator Structure Allowable Damage (Graphite Composite Elevator)
Figure 4 (Sheet 1)

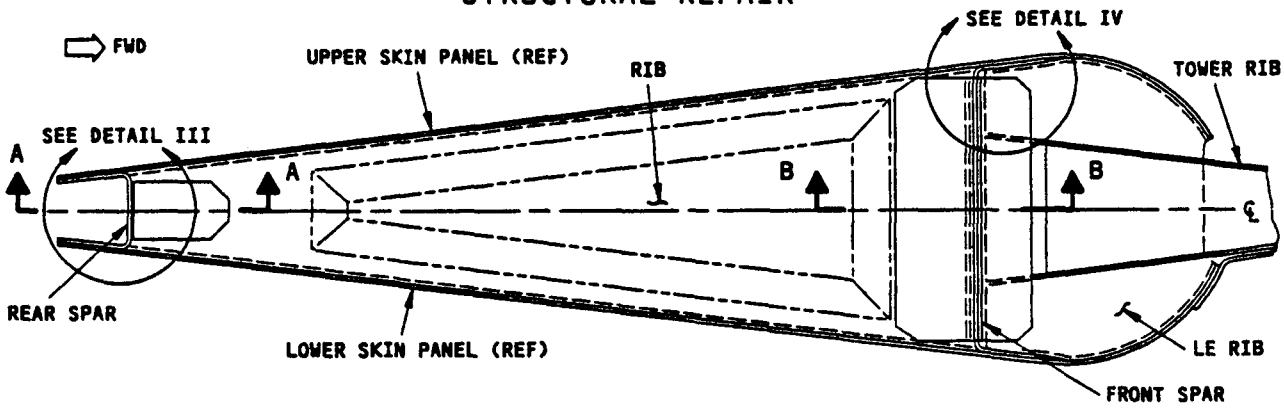


SECTION THRU ELEVATOR AT RIB LOCATION

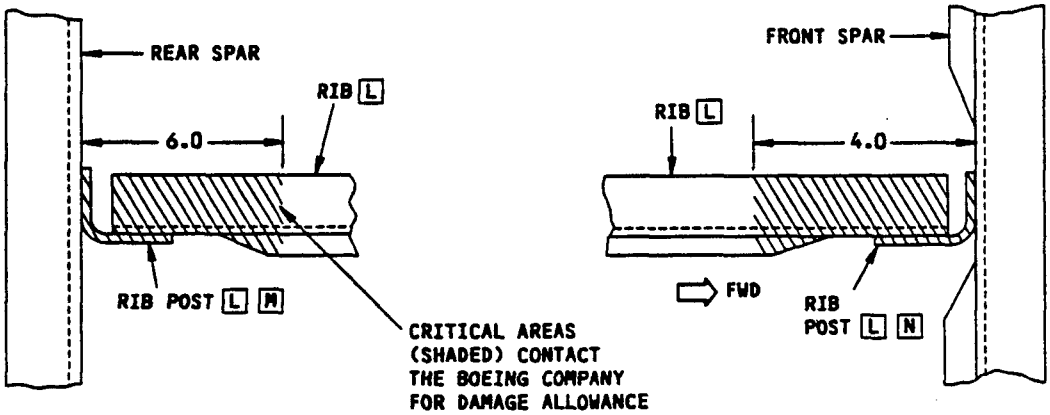


SECTION A-A

SECTION B-B

DETAIL II

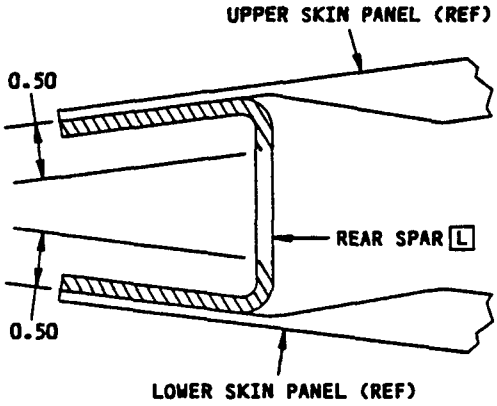


DETAIL III

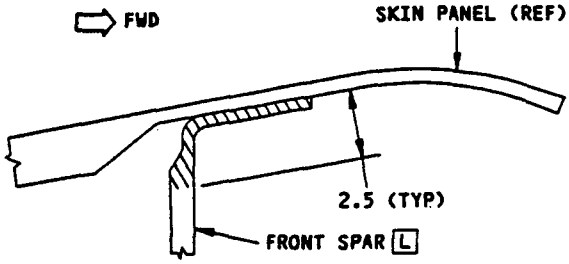


DETAIL IV

Elevator Structure Allowable Damage (Graphite Composite Elevator)
Figure 4 (Sheet 2)

141580

| DESCRIPTION | CRACKS | NICKS, GOUGES, SCRATCHES AND CORROSION | DENTS | HOLES AND PUNCTURES | DELAMINATION |
|---|---|---|---|---|---|
| FRONT SPAR - GRAPHITE/ EPOXY HONEYCOMB | B | E | G | I | K |
| REAR SPAR - GRAPHITE/ EPOXY LAMINATE | C | E | G | I | K |
| RIBS - GRAPHITE/EPOXY HONEYCOMB | B | E | G | I | K |
| CLOSURE RIB - GRAPHITE/ EPOXY LAMINATE | C | E | G | I | K |
| LE RIBS, BALANCE HORN RIBS, AND TOWER RIBS - ALUMINUM | D | F | H | J | ---- |

ALLOWABLE DAMAGE FOR DETAIL I

## NOTES

- THE ALLOWABLE DAMAGE LIMITS GIVEN IN THIS FIGURE WILL NOT HAVE AN EFFECT ON A STRUCTURALLY SIGNIFICANT ITEM (SSI) GIVEN IN SRM 51-00-4, FIG. 3. THUS, NO CHANGE TO THE SUPPLEMENTAL STRUCTURAL INSPECTION DOCUMENT (SSID) INSPECTION PROGRAM IS NECESSARY.
- FOR INVESTIGATION AND CLEANUP OF DAMAGE, REFER TO SRM 51-10.
- FOR REWORKED ALUMINUM AREAS APPLY A PROTECTIVE ALODINE COATING AS GIVEN IN SRM 51-10-2.
- REFINISH REWORKED AREAS AS GIVEN IN AMM 51-20.
- D = MAXIMUM DAMAGE DIMENSION.
- TYPICAL DAMAGE TO A PANEL EDGEBAND OR LAMINATE EDGE CAN CONSIST OF EDGE CRUSHING, CRACKS OR DELAMINATION. DAMAGE AROUND HOLES CAN CONSIST OF OVALIZATION, FASTENER PULL-THROUGH OR CRACKS OUT OF HOLE. DAMAGE CAN REDUCE THE EFFECTIVE CROSS SECTIONAL AREA OF AN EDGE OR EDGEBAND. DAMAGE TO EDGES SHOULD BE BLENDED OUT TO LIMITATIONS GIVEN FOR THE COMPONENT.

A IT IS RECOMMENDED TO REMOVE MOISTURE FROM THE DAMAGED AREA. USE VACUUM AND HEAT (A MAXIMUM OF 150°F [66°C]) TO REMOVE THAT MOISTURE.

CLEAN THE DAMAGED AREA. SEAL THE DAMAGED AREA WITH ALUMINUM FOIL TAPE (SPEED TAPE) 3M-Y436 OR AN EQUIVALENT. KEEP THE QUANTITY OF SPEED TAPE TO A MINIMUM. THE AMOUNT OF SPEED TAPE CAN CHANGE THE BALANCE MOMENT OF THE ELEVATOR. IF NECESSARY, BALANCE THE ELEVATOR. REFER TO SRM 51-81-4.

KEEP A RECORD OF THE LOCATION WHERE SPEED TAPE IS INSTALLED. MAKE AN INSPECTION OF THAT LOCATION NO MORE THAN 65 FLIGHT HOURS AFTER THE TAPE IS APPLIED. REPLACE THE TAPE IF IT STARTS TO COME OFF OR DETERIORATION IS FOUND. REPAIR THE DAMAGE NO MORE THAN 60 CALENDAR DAYS AFTER THE TAPE IS APPLIED. IF THE DAMAGE BECOMES LARGER IN LESS THAN 60 CALENDAR DAYS, REPAIR THE DAMAGE NO MORE THAN FIVE FLIGHTS AFTER THAT.

B EDGE CRACKS MUST BE REMOVED AS SHOWN IN DETAILS V AND IX. 0.50 INCH MAXIMUM LENGTH IN HONEYCOMB AREA AND REMAINDER OF LAMINATED AREA IS PERMITTED IF DAMAGE IS A MINIMUM OF 6.0 INCHES FROM OTHER DAMAGE AND 3.0 INCHES MINIMUM FROM HOLE OR PART EDGE A.

C EDGE CRACKS MUST BE REMOVED AS SHOWN IN DETAILS V AND IX. 0.50 INCH MAXIMUM LENGTH IS PERMITTED IN REMAINDER OF PART IF DAMAGE IS A MINIMUM OF 6.0 INCHES FROM ANY OTHER DAMAGE AND 3.0 INCHES MINIMUM FROM A HOLE OR PART EDGE A .

D CLEAN UP EDGE CRACKS AS SHOWN IN DETAILS V AND IX. OTHER CRACKS ARE NOT PERMITTED.

E IF FIBERS ARE DAMAGED, TREAT AS A CRACK. IF FIBERS ARE NOT DAMAGED, PROTECT AS GIVEN IN NOTE A .

F NICKS, GOUGES, SCRATCHES, OR CORROSION REMOVED AS SHOWN IN DETAILS V, VI, VIII, AND IX ARE PERMITTED IF THE MAXIMUM PERMISSIBLE DEPTH IS NOT EXCEEDED. NICKS, GOUGES, AND SCRATCHES THAT DO NOT PENETRATE ALL THE WAY THROUGH CLAD SURFACES CAN BE IGNORED.

Elevator Structure Allowable Damage (Graphite Composite Elevator)
Figure 4 (Sheet 3)


BOEING PROPRIETARY - Copyright © - Unpublished Work - See title page for details.

NOTES (CONT)

[G] DENTS GENERALLY RESULT IN FIBER DAMAGE OR DELAMINATION WHICH MAY NOT BE APPARENT USING VISUAL OR TAP TESTING METHODS OF DETECTION. DENTS UP TO 0.50 DIAMETER MAXIMUM (D) ARE ALLOWED BUT MUST BE A MINIMUM OF 6.0 INCHES (EDGE TO EDGE) FROM ANY OTHER DAMAGE AND 3.0 INCHES MINIMUM FROM ANY FASTENER HOLE OR PART EDGE. TREAT PER NOTE [A]. IF FIBER DAMAGE OR DELAMINATION IS DETECTED REFER TO APPLICABLE DAMAGE DATA IN TABLE [A]

[H] DENTS ALLOWED PER DETAIL VII

[I] 0.50 MAX DIA ALLOWED PROVIDED DAMAGE IS MIN OF 6D FROM OTHER DAMAGE, NEAREST HOLE OR PART EDGE. DO NOT CLEAN UP DAMAGE EXCEPT TO REMOVE RESIN BURRS EXTENDING INTO SURFACE CONTOUR [A]

[J] HOLES UP TO 0.25 DIAMETER ARE ALLOWED PROVIDED THEY ARE LOCATED 4D FROM ANY OTHER HOLE, FASTENER, PART EDGE OR OTHER DAMAGE AND ARE FILLED WITH 2117-T3 OR T4 ALUMINUM RIVETS. ALUMINUM RIVETS TO BE INSTALLED WET WITH BMS 5-95 SEALANT. ONE HOLE ALLOWED PER WEB BAY.

[K] 0.50 MAX DIA IS ALLOWED PROVIDED DAMAGE IS A MINIMUM OF 6.0 INCHES FROM ANY OTHER DAMAGE AND 1.0 INCH MINIMUM FROM ANY HOLE OR PART EDGE. A MAXIMUM OF 0.10 INCH DELAMINATION FROM PART EDGE IS ALLOWED. TREAT DELAMINATION IN HONEYCOMB AND LAMINATED AREAS PER [A]

[L] DAMAGE NOT ALLOWED IN CRITICAL AREAS (SHADED). CONTACT THE BOEING COMPANY FOR REWORK DAMAGE DATA

[M] THIS CRITICAL AREA ALONG LENGTH OF RIB APPLIES AT ALL RIB-TO-REAR SPAR INTERFACES

[N] THIS CRITICAL AREA ALONG LENGTH OF RIB APPLIES AT ALL RIB-TO-FRONT SPAR INTERFACES

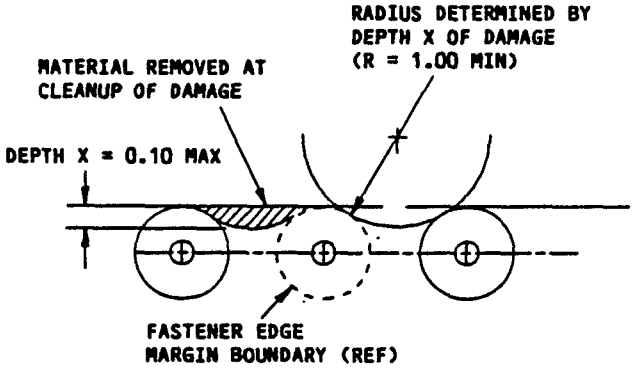


DAMAGE CLEANUP OF EDGES WHERE FASTENER EDGE MARGINS DO NOT OVERLAP

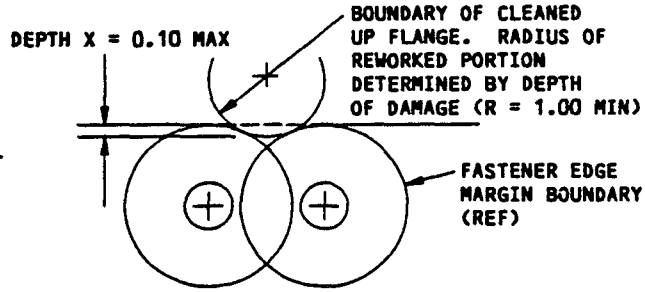


DAMAGE CLEANUP OF EDGES WHERE FASTENER EDGE MARGINS OVERLAP

DETAIL V

Elevator Structure Allowable Damage (Graphite Composite Elevator)
Figure 4 (Sheet 4)

141585

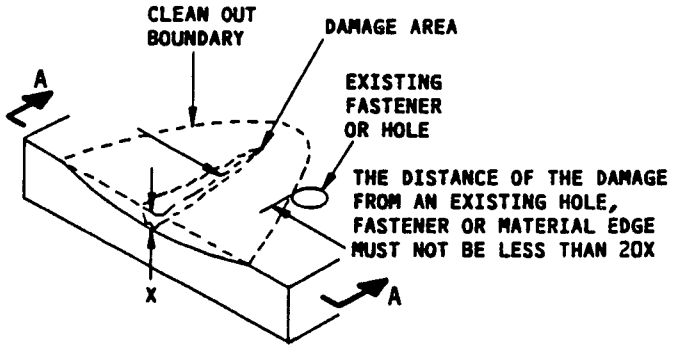


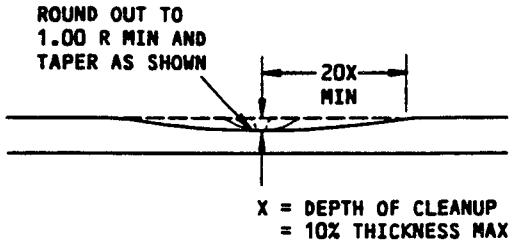


SECTION A-A

REMOVAL OF NICK, GOUGE, SCRATCH, AND CORROSION DAMAGE ON A SURFACE
DETAIL VI

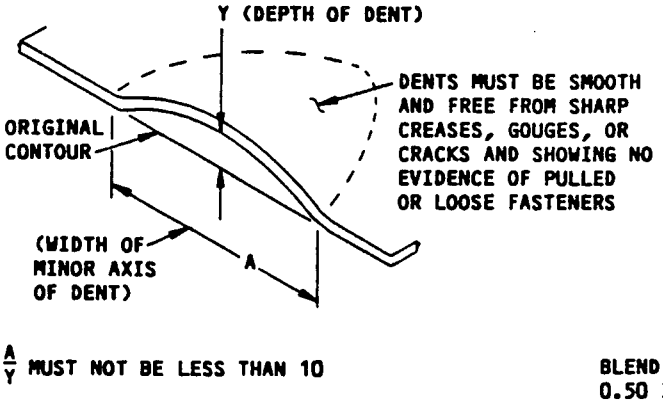


DETAIL VII

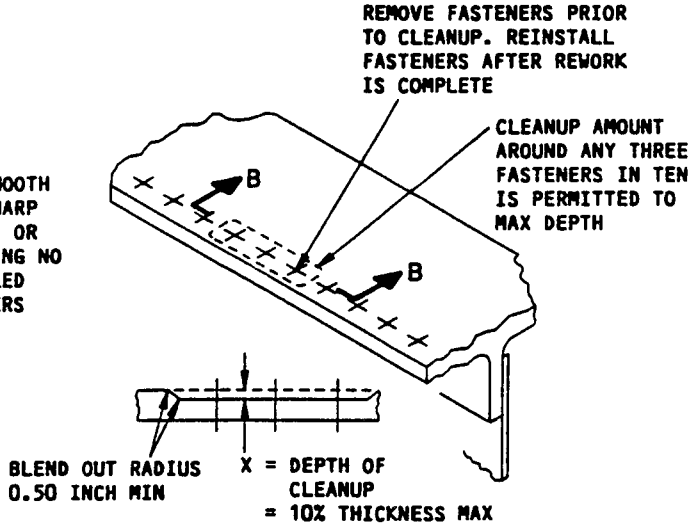


SECTION B-B
DAMAGE CLEANUP
DETAIL VIII

Elevator Structure Allowable Damage (Graphite Composite Elevator)
Figure 4 (Sheet 5)

141587

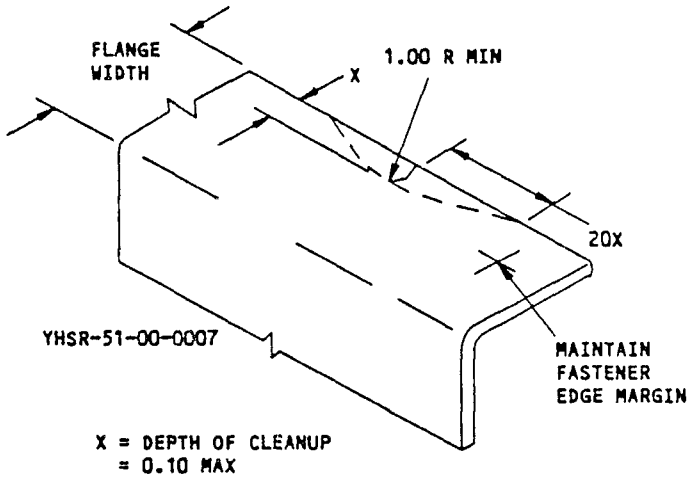


REMOVAL OF DAMAGE ON AN EDGE

DETAIL IX

Elevator Structure Allowable Damage (Graphite Composite Elevator)
Figure 4 (Sheet 6)

141593

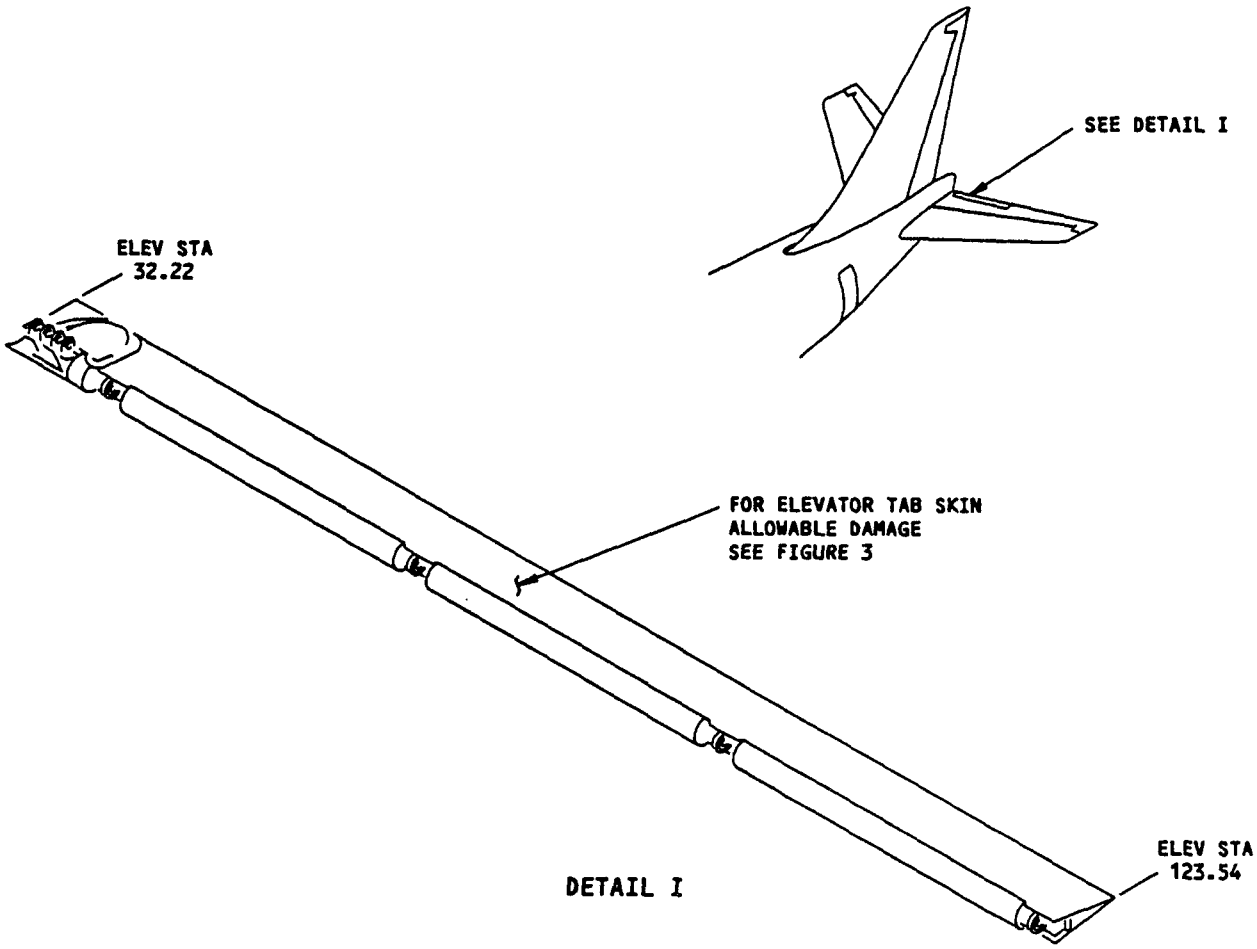


DETAIL I

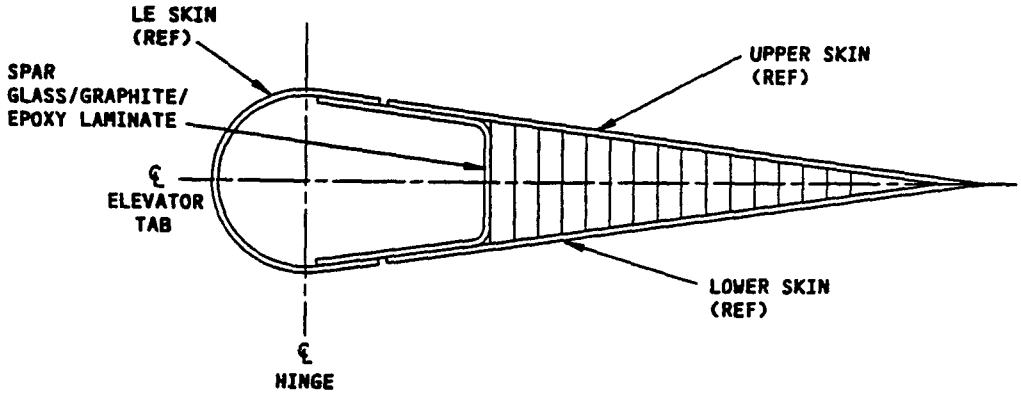


SECTION THRU ELEVATOR TAB

Elevator Tab Structure Allowable Damage (Graphite Composite Elevator)
Figure 5 (Sheet 1)

141944

| DESCRIPTION | CRACKS | NICKS, GOUGES, SCRATCHES AND CORROSION | DENTS | HOLES AND PUNCTURES | DELAMINATION |
|---|---|---|---|---|---|
| SPAR-GRAPHITE/EPOXY LAMINATE | B | C | D | E | F |

ALLOWABLE DAMAGE FOR DETAIL I

## NOTES

- THE ALLOWABLE DAMAGE LIMITS GIVEN IN THIS FIGURE WILL NOT HAVE AN EFFECT ON A STRUCTURALLY SIGNIFICANT ITEM (SSI) GIVEN IN SRM 51-00-4, FIG. 3. THUS, NO CHANGE TO THE SUPPLEMENTAL STRUCTURAL INSPECTION DOCUMENT (SSID) INSPECTION PROGRAM IS NECESSARY.
- FOR INVESTIGATION AND CLEANUP OF DAMAGE REFER TO SRM 51-10.
- REFINISH REWORKED AREAS AS GIVEN IN AMM 51-20.
- D = MAXIMUM DAMAGE DIMENSION.
- TYPICAL DAMAGE TO A LAMINATE EDGE CAN CONSIST OF EDGE CRUSHING, CRACKS OR DELAMINATION. DAMAGE AROUND HOLES CAN CONSIST OF OVALIZATION, FASTENER PULL-THROUGH OR CRACKS OUT OF HOLE. DAMAGE CAN REDUCE THE EFFECTIVE CROSS SECTIONAL AREA OF AN EDGE. DAMAGE TO EDGES SHOULD BE BLENDED OUT TO LIMITATIONS GIVEN FOR COMPONENT.

A IT IS RECOMMENDED TO REMOVE MOISTURE FROM THE DAMAGED AREA. USE VACUUM AND HEAT (A MAXIMUM OF 150°F [66°C]) TO REMOVE THAT MOISTURE.

CLEAN THE DAMAGED AREA. SEAL THE DAMAGED AREA WITH ALUMINUM FOIL TAPE (SPEED TAPE) 3M-Y436 OR AN EQUIVALENT. KEEP THE QUANTITY OF SPEED TAPE TO A MINIMUM. THE AMOUNT OF SPEED TAPE CAN CHANGE THE BALANCE MOMENT OF THE ELEVATOR. IF NECESSARY, BALANCE THE ELEVATOR. REFER TO SRM 51-81-6.

KEEP A RECORD OF THE LOCATION WHERE SPEED TAPE IS INSTALLED. MAKE AN INSPECTION OF THAT LOCATION NO MORE THAN 65 FLIGHT HOURS AFTER THE TAPE IS APPLIED. REPLACE THE TAPE IF IT STARTS TO COME OFF OR DETERIORATION IS FOUND. REPAIR THE DAMAGE NO MORE THAN 60 CALENDAR DAYS AFTER THE TAPE IS APPLIED. IF THE DAMAGE BECOMES LARGER IN LESS THAN 60 CALENDAR DAYS, REPAIR THE DAMAGE NO MORE THAN FIVE FLIGHTS AFTER THAT.

B EDGE CRACKS MUST BE REMOVED AS SHOWN IN DETAILS II AND III. 0.50 INCH MAXIMUM LENGTH IS PERMITTED FOR EACH SQUARE FOOT OF AREA AND A MINIMUM OF 4D FROM OTHER DAMAGE A.

C DAMAGE IS PERMITTED ON SURFACE RESIN ONLY. DAMAGE TO FIBERS IS NOT PERMITTED. CLEANUP DAMAGE AS SHOWN IN DETAIL II OR III A.

D DENTS GENERALLY RESULT IN FIBER DAMAGE OR DELAMINATION. HOWEVER, IF THERE IS NO FIBER DAMAGE OR DELAMINATION, DENTS UP TO 0.50 INCH DIAMETER MAXIMUM ARE PERMITTED. ONE DENT FOR EACH SQUARE FOOT OF AREA IS PERMITTED WHICH MUST BE A MINIMUM OF 4D FROM OTHER DAMAGE, FASTENER HOLE, OR PART EDGE. IF FIBER DAMAGE OR DELAMINATION IS PRESENT, REFER TO APPLICABLE DAMAGE DATA IN TABLE.

E 0.50 INCH MAXIMUM DIAMETER IS PERMITTED IF DAMAGE IS MINIMUM OF 4D FROM OTHER DAMAGE, NEAREST HOLE OR PART EDGE. DO NOT CLEAN UP DAMAGE EXCEPT TO REMOVE RESIN BURRS EXTENDING INTO SURFACE CONTOUR A.

F 1.0 SQUARE INCH IS PERMITTED FOR EACH SQUARE FOOT OF AREA AND A MINIMUM OF 4D FROM OTHER DAMAGE AND 1.0 INCH MINIMUM FROM A HOLE OR PART EDGE. A MAXIMUM OF 0.10 INCH DELAMINATION FROM PART EDGE IS PERMITTED. PROTECT DELAMINATION IN LAMINATED AREAS AS GIVEN IN A .

Elevator Tab Structure Allowable Damage (Graphite Composite Elevator)
Figure 5 (Sheet 2)


BOEING PROPRIETARY - Copyright © - Unpublished Work - See title page for details.

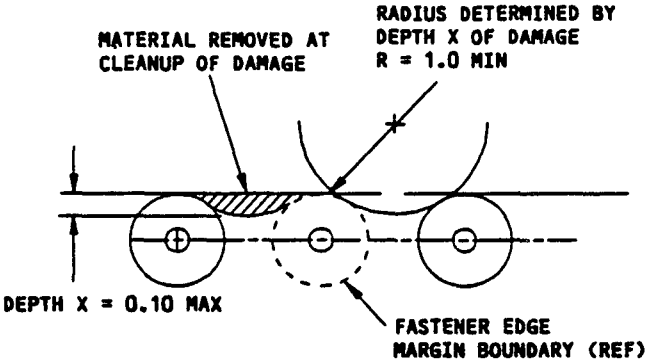


DAMAGE CLEANUP OF EDGES WHERE FASTENER EDGE MARGINS DO NOT OVERLAP

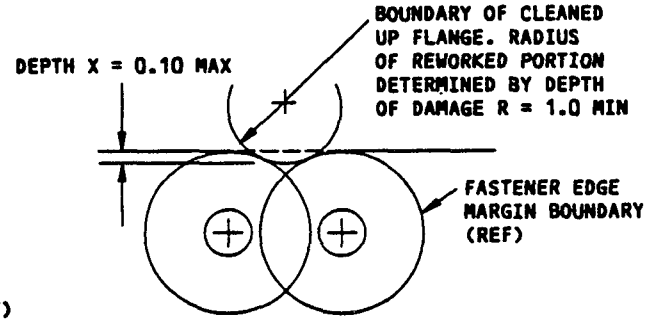


DAMAGE CLEANUP OF EDGES WHERE FASTENER EDGE MARGINS OVERLAP

DETAIL II

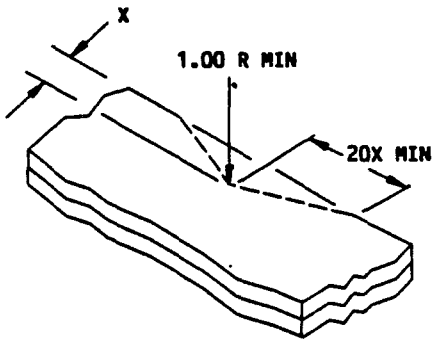


X = DEPTH OF CLEANUP = 0.10 MAX

REMOVAL OF DAMAGE ON AN EDGE

DETAIL III

Elevator Tab Structure Allowable Damage (Graphite Composite Elevator)
Figure 5 (Sheet 3)

141922

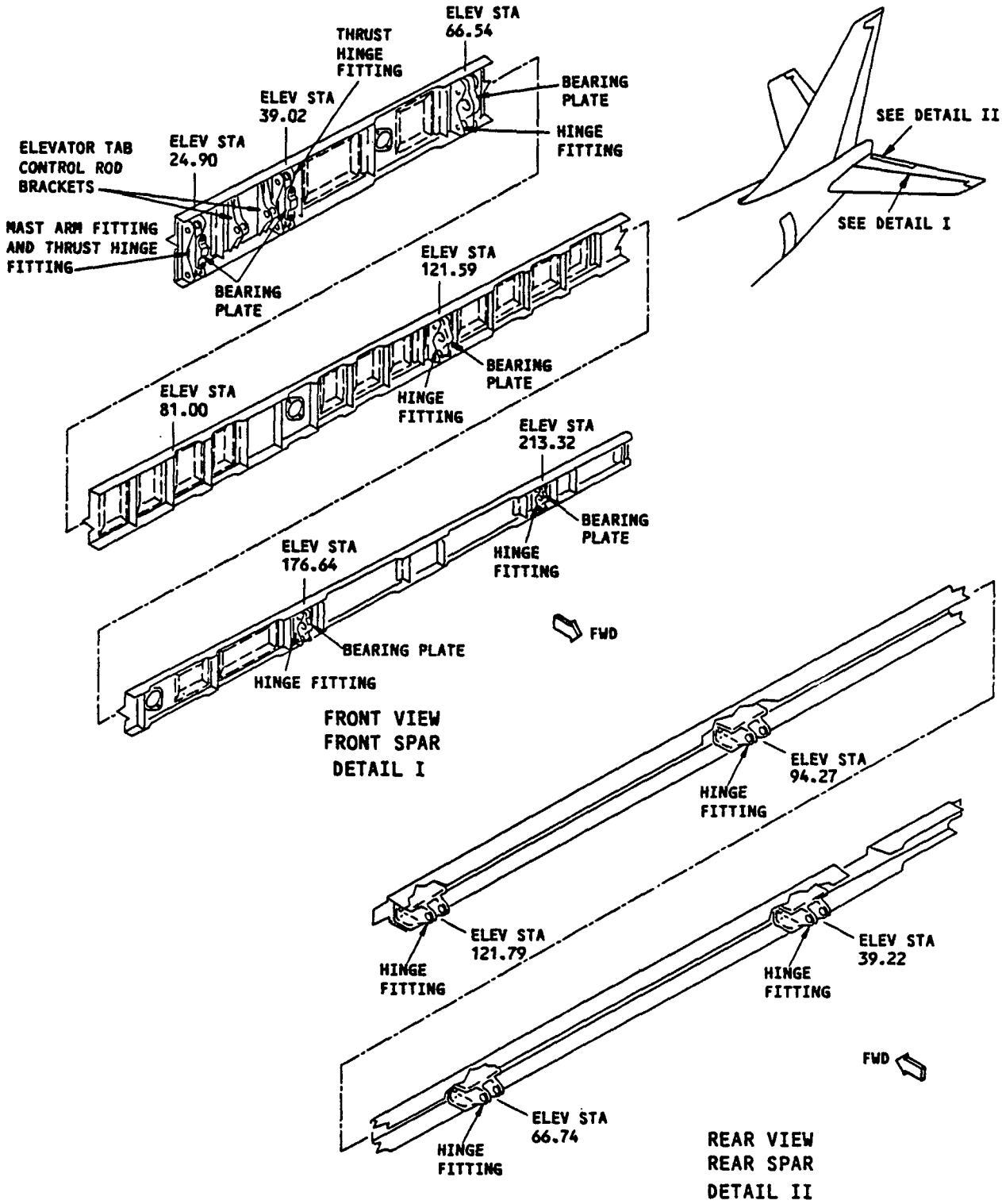


Elevator Fitting Allowable Damage (Graphite Composite Elevator)
Figure 6 (Sheet 1)

141940

| DESCRIPTION | CRACKS | NICKS, GOUGES, CORROSION AND SCRATCHES | DENTS | HOLES AND PUNCTURES |
|---|---|---|---|---|
| HINGE FITTINGS, MAST ARM FITTINGS, CONTROL ROD BRACKETS [C] [D] | [A] | [B] | NOT PERMITTED | NOT PERMITTED |
| BEARING PLATES [C] [D] | [A] | [B] | NOT PERMITTED | NOT PERMITTED |

ALLOWABLE DAMAGE FOR DETAILS I AND II

NOTES

- THE ALLOWABLE DAMAGE LIMITS GIVEN IN THIS FIGURE WILL NOT HAVE AN EFFECT ON A STRUCTURALLY SIGNIFICANT ITEM (SSI) GIVEN IN SRM 51-00-4, FIG. 3. THUS, NO CHANGE TO THE SUPPLEMENTAL STRUCTURAL INSPECTION DOCUMENT (SSID) INSPECTION PROGRAM IS NECESSARY.
- FOR REWORKED ALUMINUM AREAS APPLY A CHEMICAL CONVERSION COATING AS GIVEN IN SRM 51-10-2.
- REFINISH REWORKED AREAS AS GIVEN IN AMM 51-20.

[A] CLEAN UP EDGE CRACKS AS SHOWN IN DETAILS III AND VI. OTHER CRACKS ARE NOT PERMITTED.

[B] FOR EDGE DAMAGE, SEE DETAILS III AND VI
FOR OTHER DAMAGE, SEE DETAIL IV
FOR LUG DAMAGE, SEE DETAIL V [C].

[C] DAMAGE CLEANUP IS NOT PERMITTED ON LUG BORE SURFACE.

[D] SHOT PEEN ALL REWORKED AREAS AS GIVEN IN SOPM 20-10-03.

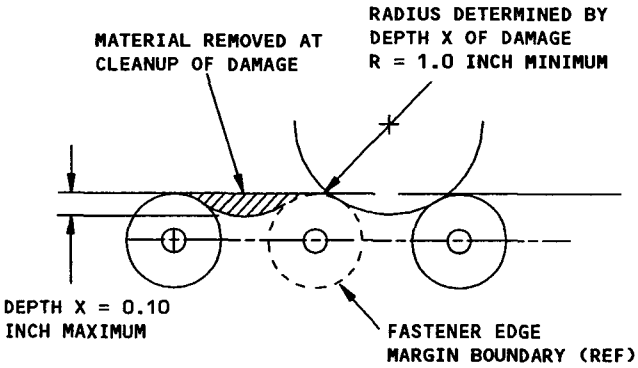


DAMAGE CLEANUP OF EDGES WHERE FASTENER EDGE MARGINS DO NOT OVERLAP

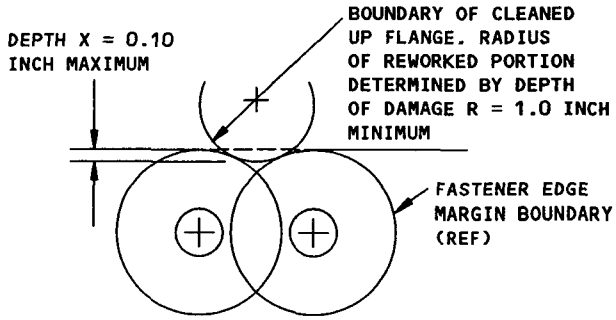


DAMAGE CLEANUP OF EDGES WHERE FASTENER EDGE MARGINS OVERLAP

DETAIL III

Elevator Fitting Allowable Damage (Graphite Composite Elevator)
Figure 6 (Sheet 2)


BOEING PROPRIETARY - Copyright © - Unpublished Work - See title page for details.

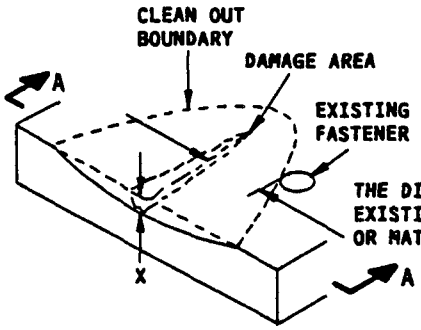


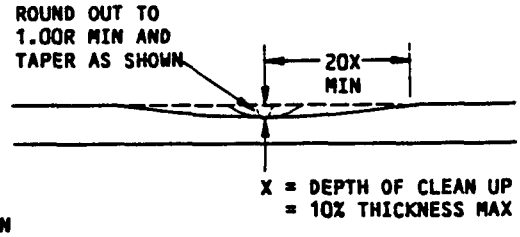


SECTION A-A

THE AREA REMOVED FOR CLEAN UP MUST NOT EXCEED 10% OF THE CROSS SECTIONAL AREA

REMOVAL OF NICK, GOUGE, CORROSION, AND SCRATCH DAMAGE ON A SURFACE
DETAIL IV

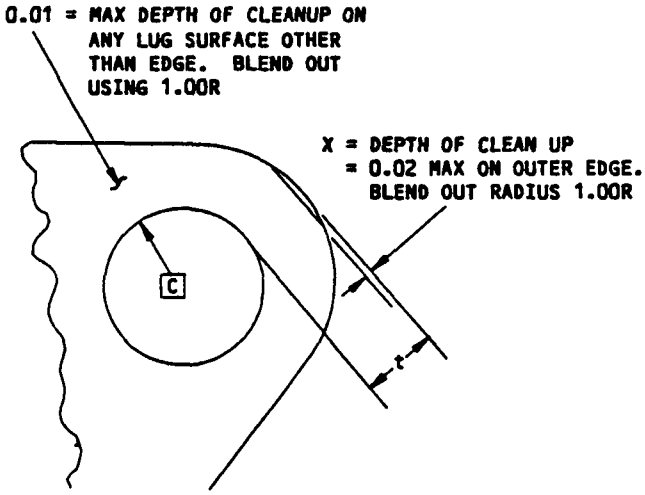


DAMAGE CLEAN UP FOR EDGES OF LUG
DETAIL V

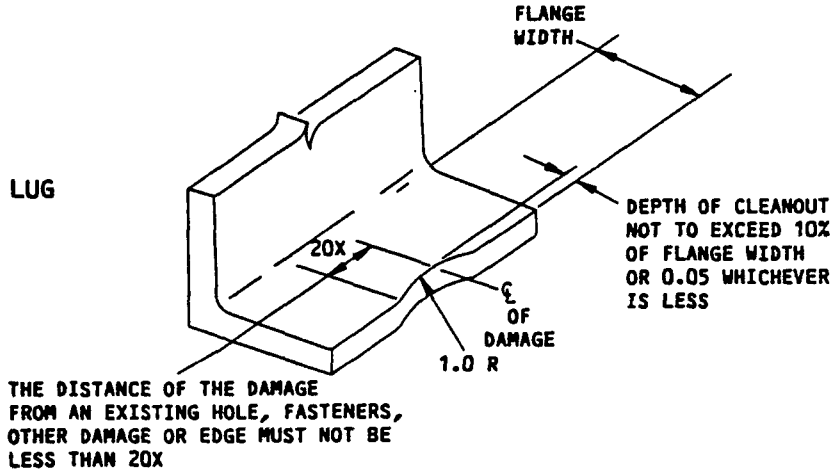


REMOVAL OF EDGE DAMAGE FROM
FREE FLANGE WITHOUT FASTENERS
DETAIL VI

Elevator Fitting Allowable Damage (Graphite Composite Elevator)
Figure 6 (Sheet 3)

141929

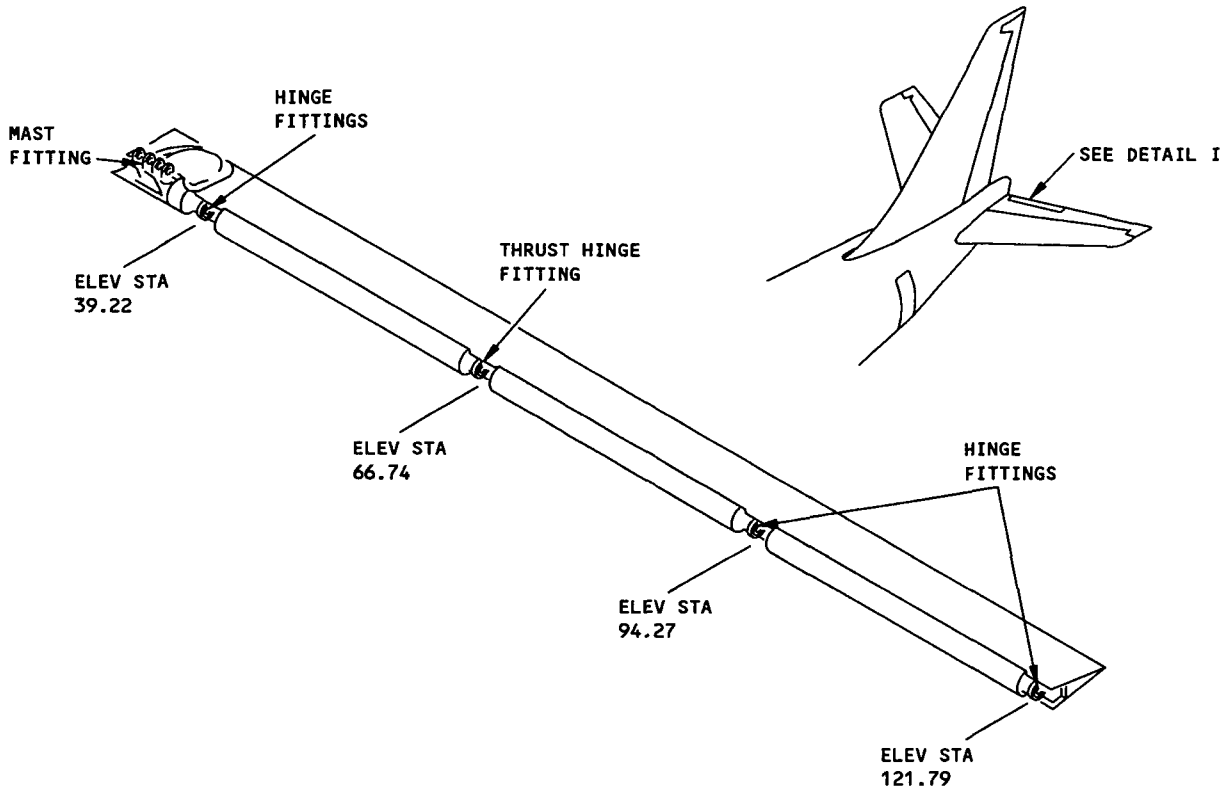


DETAIL I

| DESCRIPTION | CRACKS | NICKS, GOUGES, CORROSION AND SCRATCHES | DENTS | HOLES AND PUNCTURES |
|---|---|---|---|---|
| MAST FITTING [C] [D] | [A] | [B] | NOT PERMITTED | NOT PERMITTED |
| HINGE FITTING [C] [D] | [A] | [B] | NOT PERMITTED | NOT PERMITTED |

ALLOWABLE DAMAGE FOR DETAIL I

NOTES

- THE ALLOWABLE DAMAGE LIMITS GIVEN IN THIS FIGURE WILL NOT HAVE AN EFFECT ON A STRUCTURALLY SIGNIFICANT ITEM (SSI) GIVEN IN SRM 51-00-4, FIG. 3. THUS, NO CHANGE TO THE SUPPLEMENTAL STRUCTURAL INSPECTION DOCUMENT (SSID) INSPECTION PROGRAM IS NECESSARY.
- FOR REWORKED ALUMINUM AREAS APPLY A CHEMICAL CONVERSION COATING AS GIVEN IN SRM 51-10-2.
- REFINISH REWORKED AREAS AS GIVEN IN AMM 51-20.

[A] CLEAN UP EDGE CRACKS AS SHOWN IN DETAILS II AND V. OTHER CRACKS ARE NOT PERMITTED.

[B] FOR EDGE DAMAGE, SEE DETAILS II AND V
FOR OTHER DAMAGE, SEE DETAIL III
FOR LUG DAMAGE, SEE DETAIL IV.

[C] DAMAGE CLEANUP IS NOT PERMITTED ON LUG BORE SURFACE.

[D] SHOT PEEN ALL REWORKED AREAS AS GIVEN IN SOPM 21-10-03.

Elevator Tab Fitting Allowable Damage (Graphite Composite Elevator)
Figure 7 (Sheet 1)


BOEING PROPRIETARY - Copyright © - Unpublished Work - See title page for details.

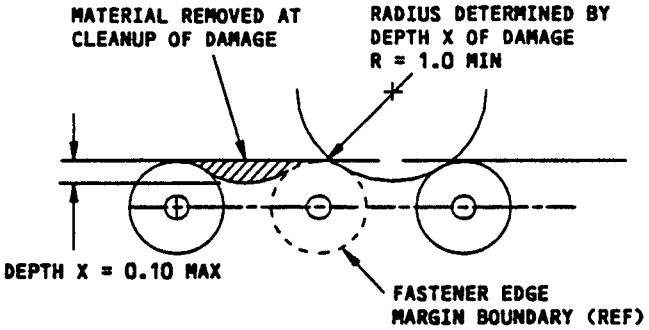


DAMAGE CLEANUP OF EDGES WHERE FASTENER EDGE MARGINS DO NOT OVERLAP

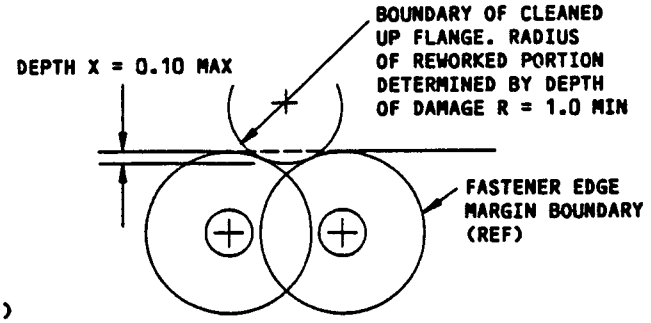


DAMAGE CLEANUP OF EDGES WHERE FASTENER EDGE MARGINS OVERLAP

DETAIL II

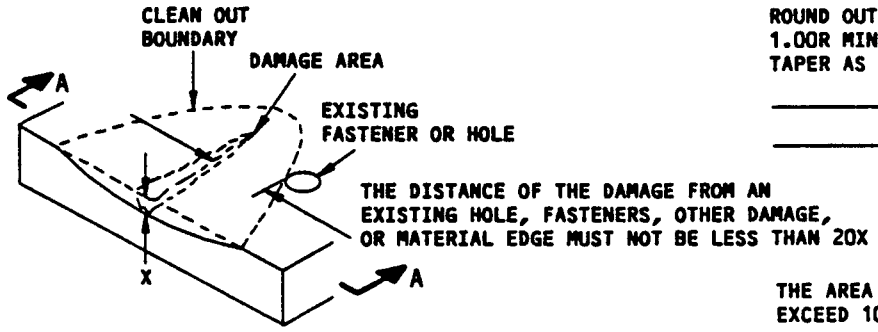


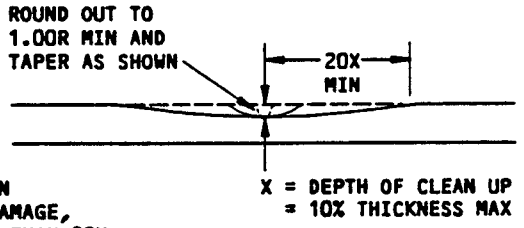


SECTION A-A

THE AREA REMOVED FOR CLEAN UP MUST NOT EXCEED 10% OF THE CROSS SECTIONAL AREA

REMOVAL OF NICK, GOUGE, CORROSION, AND SCRATCH DAMAGE ON A SURFACE
DETAIL III

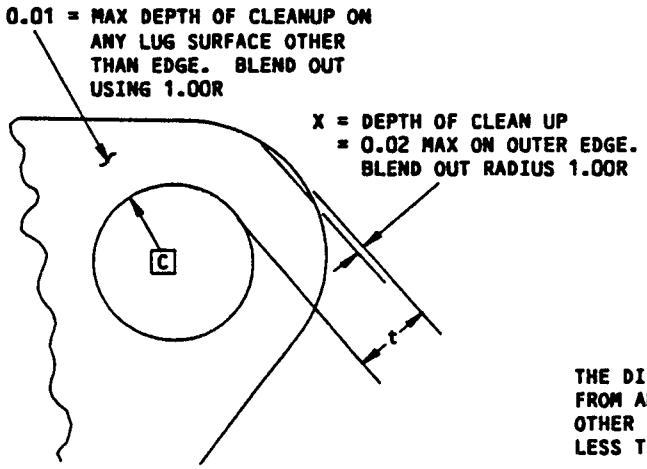


DAMAGE CLEAN UP FOR EDGES OF LUG
DETAIL IV

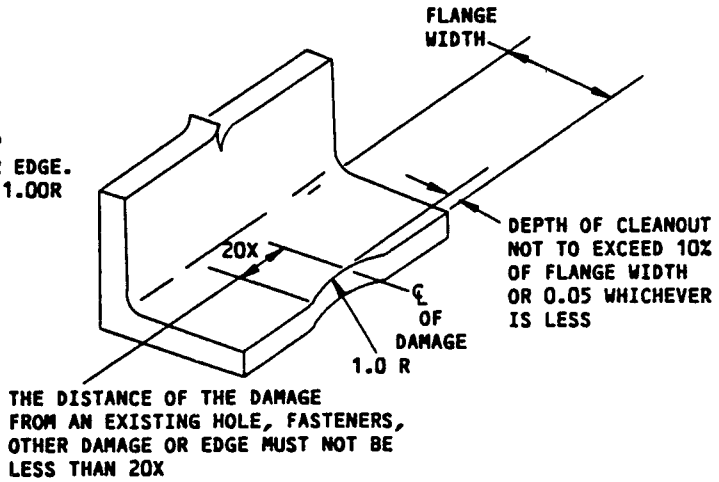


REMOVAL OF EDGE DAMAGE FROM FREE FLANGE WITHOUT FASTENERS
DETAIL V

Elevator Tab Fitting Allowable Damage (Graphite Composite Elevator)
Figure 7 (Sheet 2)

141930

| ITEM | CHORDS | | WEB | |
|---|---|---|---|---|
| | MATERIAL | REPAIR FIG. NO. | MATERIAL | REPAIR FIG. NO. |
| 1 | BAC 1514-1732<br>2024-T42 | 55-20-4<br>FIG 1 | 0.020 +0.020<br>CLAD 2024-T3 | |
| 2 | BAC 1506-1892<br>2024-T3511 | 55-20-4<br>FIG 1 | 0.016 + 0.016<br>CLAD 2024-T3 | |
| 3 | | | 0.032 CLAD<br>2024-T4 | |
| 4 | GLASS FABRIC<br>REINFORCED HONEYCOMB<br>PANEL | | | |
| 5 | BAC 1505-26360<br>2024-T3511 | 55-20-4<br>FIG 1 | 0.010 + 0.010<br>CLAD 2025-T3 | |
| 6 | BAC 1505-100458<br>2024-T3511 | 55-20-4<br>FIG 1 | 0.010 + 0.010<br>CLAD 2024-T3 | |
| 7 | | | 0.012 + 0.012<br>CLAD 2024-T3 | |
| 8 | BAC 1506-1892<br>2024-T3511 | 55-20-4<br>FIG 1 | 0.010 + 0.010<br>CLAD 2024-T3 | |
| 9 | BAC 1506-1892<br>2024-T3511 | 55-20-4<br>FIG 1 | 0.020 + 0.020<br>CLAD 2024-T3 | |
| 10 | | | 0.050<br>2024-T4 | |
| 11 | BAC 1505-100583<br>2024-T42 | 55-20-4<br>FIG 1 | 0.012 + 0.012<br>CLAD 2024-T3 | |
| 12 | BAC 1505-100551<br>2024-T3511 | 55-20-4<br>FIG 1 | 0.012 +0.012<br>CLAD 2024-T3 | |
| 13 | BAC 1506-1328<br>2024-T3511 | | 0.012 +0.012<br>CLAD 2024-T3 | |
| 14 | | | 0.032 CLAD<br>2024-T4 | |
| 15 | BAC 1520-884<br>ALUMINUM BRONZE | | | |
| 16 | | | 0.040 CLAD<br>2024-T42 | |
| 17 | BAC 1506-1864<br>2024-T3511 | 55-20-5<br>FIG 1 | 0.012 +0.012<br>2024-T3 | |

Elevator and Tab Structure Identification
(Fiberglass/Metal Elevator)
Figure 1 (Sheet 1)

| ITEM | CHORDS | | WEB | |
|---|---|---|---|---|
| | MATERIAL | REPAIR FIG. NO. | MATERIAL | REPAIR FIG. NO. |
| 18 | | | 0.040 CLAD 2024-T42 | |
| 19 | | | 0.050 CLAD 2024-T4 | |
| 20 | | | 0.040 CLAD 2024-T4 | |
| 21 | HINGE FITTING BAC1520-746 2024-T3511 | | | |
| 22 | GLASS FABRIC REINFORCED PLASTIC | | | |
| 23 | 0.016 + 0.016 CLAD 2024-T3 | | | |
| 24 | 7075-T73 FORGING | | | |
| 25 | BAC1505-100589 2024-T3511 | | | |
| 26 | BAC1514-27 AND BAC1503-100144 2024-T3511 | | | |
| 27 | 4340 STEEL 180,000-200,000 | | | |
| 28 | BAC1505-100582 2024-T3511 | | | |
| 29 | BAC1488-30 2024-T3 TUBE | | | |
| 30 | BAC1506-1864 2024-T3511 | 55-20-5 Fig. 1 | 0.080 CLAD 2024-T3 | |
| 31 | BAC1505-100583 2024-T42 | 55-20-4 Fig. 1 | 0.050 CLAD 2024-T3 | |

Elevator and Tab Structure Identification
(Fiberglass/Metal Elevator)
Figure 1 (Sheet 2)

| ITEM | CHORDS | | WEB | |
|---|---|---|---|---|
| | MATERIAL | REPAIR FIG. NO. | MATERIAL | REPAIR FIG. NO. |
| 32 | BAC1505-100551<br>2024-T3511 | 55-20-4<br>Fig. 1 | 0.050 CLAD<br>2024-T3 | |
| 33 | BAC1506-1892<br>2024-T3511 | 55-20-4<br>Fig. 1 | 0.040<br>CLAD 2024-T3 | |
| 34 | BAC1505-26360<br>2024-T3511 | 55-20-4<br>Fig. 1 | 0.032<br>CLAD 2024-T3 | |
| 35 | BAC1505-100458<br>2024-T3511 | 55-20-4<br>Fig. 1 | 0.032<br>CLAD 2024-T3 | |
| 36 | BAC1505-26360<br>2024-T3511 | 55-20-4<br>Fig. 1 | 0.025<br>CLAD 2024-T3 | |
| 37 | BAC1506-1892<br>2024-T3511 | 55-20-4<br>Fig. 1 | 0.025<br>CLAD 2024-T3 | |
| 38 | BAC1505-100458<br>2024-T3511 | 55-20-4<br>Fig. 1 | 0.025<br>CLAD 2024-T3 | |
| 39 | BAC1506-1892<br>2024-T3511 | 55-20-4<br>Fig. 1 | 0.050<br>CLAD 2024-T3 | |
| 40 | | | 0.032<br>CLAD 2024-T42 | |
| 41 | BAC1506-1864<br>2024-T3511 | 55-20-4<br>Fig. 1 | 0.032<br>CLAD 2024-T42 | |
| 42 | HINGE FITTING<br>BAC1520-746<br>REVERE ALLOY 380 | | | |
| 43 | HINGE FITTING<br>BAC1519-130<br>REVERE ALLOY 380 | | | |
| 44 | HINGE FITTING<br>BAC1519-130<br>2024-T3511 | | | |
| 45 | HINGE FITTING<br>BAC1520-1563<br>2024-T3511 | | | |

Elevator and Tab Structure Identification
(Fiberglass/Metal Elevator)
Figure 1 (Sheet 3)

NOTES

- THIS FIGURE APPLIES TO AIRPLANES DELIVERED WITH ELEVATORS AND ELEVATOR TABS CONSTRUCTED OF FIBERGLASS AND METAL, CUM LINE NUMBERS:
  1 THRU 1000, 1002, 1004 THRU 1006, 1008 THRU 1011, 1014, 1016, 1017, 1059, 1135, 1143, 1151, 1154, 1155, 1165, 1167, 1176, 1178, 1223, 1226, 1236

A ATTACHMENT FITTING

B DELETED

C DELETED

D FOR CUM LINE NUMBERS:
1 THRU 423, 426, 428 PRIOR TO INCORPORATION OF SB 55-1019

E FOR CUM LINE NUMBERS:
424, 425, 427, 429 AND ON AND OTHER AIRPLANES AFTER INCORPORATION OF SB 55-1019

F FOR CUM LINE NUMBERS:
150 THRU 491

G FOR CUM LINE NUMBERS:
492 AND ON

H FOR AIRPLANES WITH INBOARD REAR SPAR REPLACEMENT PORTION OF SB 55-1022 INCORPORATED

I FOR AIRPLANES PRIOR TO INCORPORATION OF REAR SPAR REPLACEMENT TO SB 55-1022

J FOR CUM LINE NUMBERS:
150 THRU 491 PRIOR TO INCORPORATION OF REAR SPAR REPLACEMENT TO SB 55-1022

K FOR AIRPLANES LISTED IN J WITH REAR SPAR REPLACEMENT PORTION OF SB 55-1022 INCORPORATED

L FOR CUM LINE NUMBERS:
1 THRU 36

M FOR CUM LINE NUMBERS:
37 THRU 149

N FOR CUM LINE NUMBERS:
1 THRU 8

O FOR CUM LINE NUMBERS:
9 THRU 149

Elevator and Tab Structure Identification
(Fiberglass/Metal Elevator)
Figure 1 (Sheet 4)

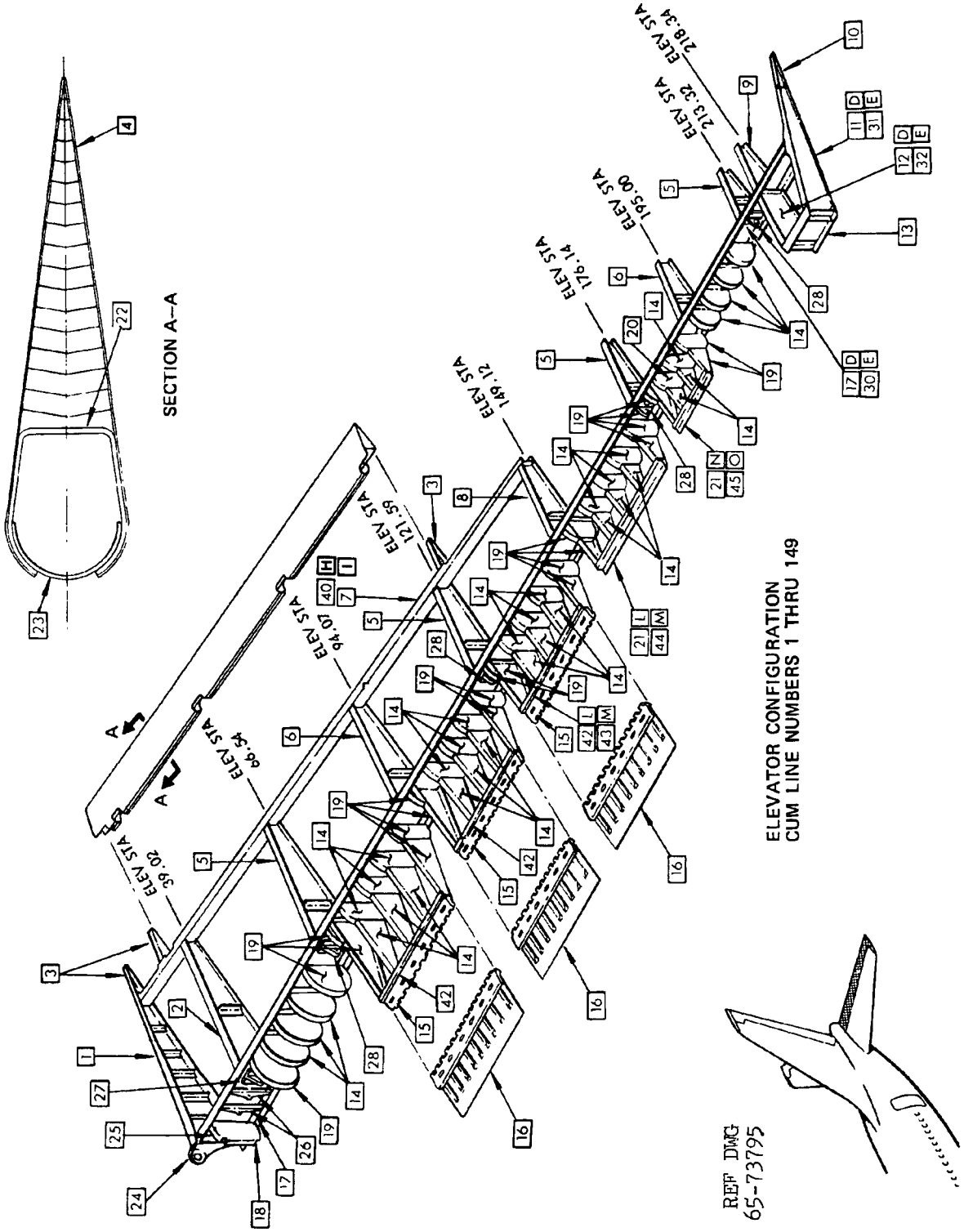


Elevator and Tab Structure Identification
(Fiberglass/Metal Elevator)
Figure 1 (Sheet 5)


BOEING PROPRIETARY - Copyright © - Unpublished Work - See title page for details.

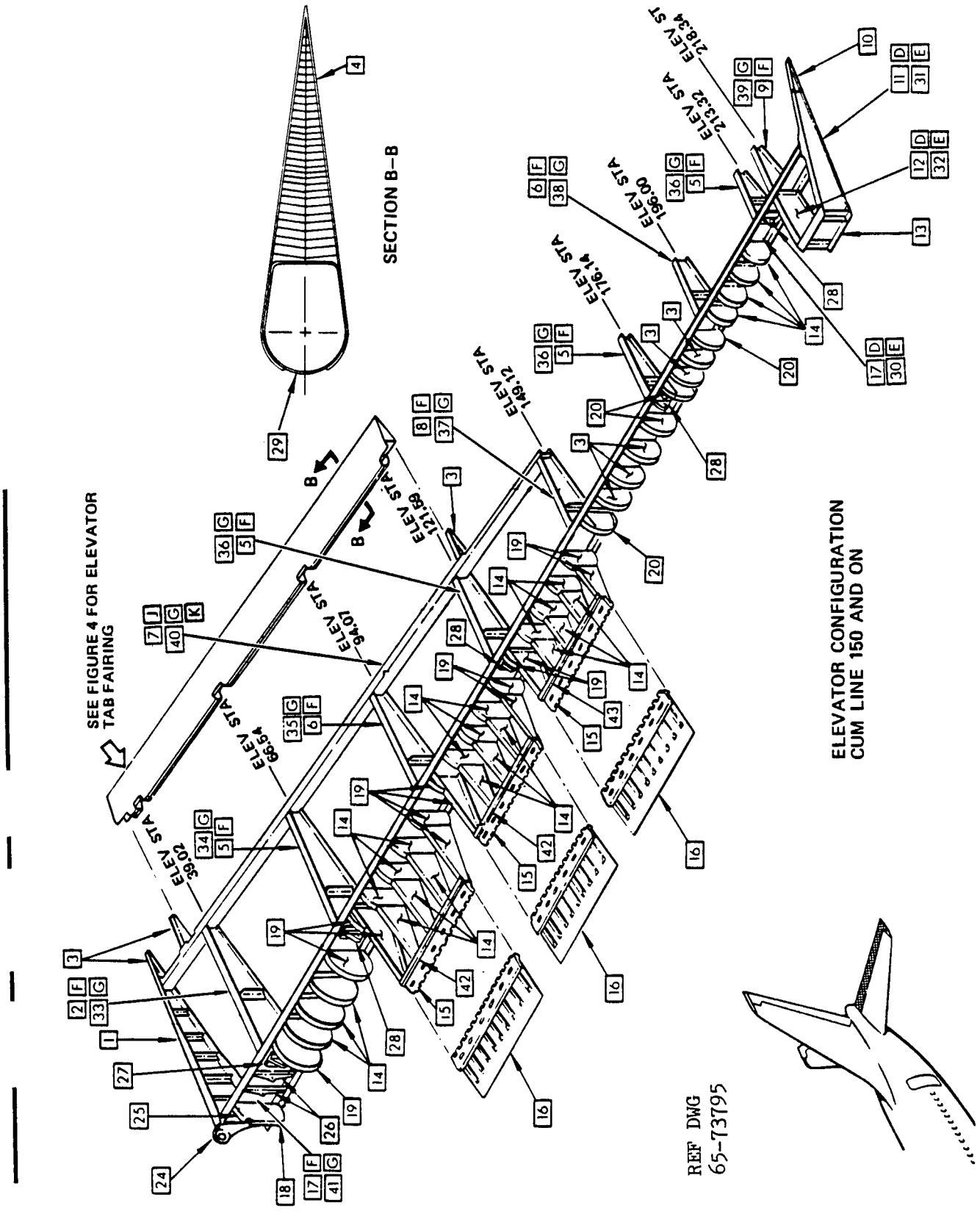


Elevator and Tab Structure Identification
(Fiberglass/Metal Elevator)
Figure 1 (Sheet 6)

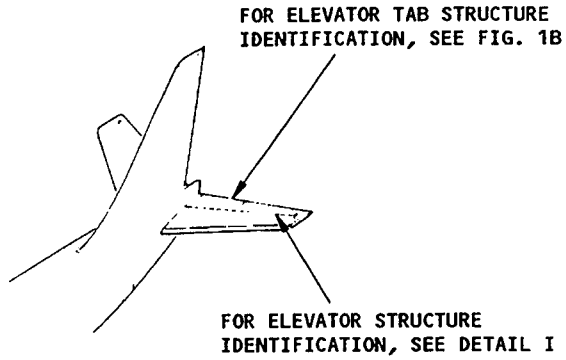


NOTES

- THIS FIGURE APPLIES TO GRAPHITE COMPOSITE ELEVATORS DELIVERED ON 737-200 AIRPLANES, CUM LINE NUMBERS: 1003, 1012, 1013, 1018, 1020, 1021, 1023 THRU 1027, 1029 THRU 1032, 1034, 1035, 1039 THRU 1120, 1186, 1189, 1194, 1197, 1199, 1203, 1241, 1245, 1256, 1257, 1261, 1262, 1265, 1266, 1267, 1299, 1313, 1319, 1329, 1342, 1347, 1361, 1369, 1371, 1379, 1387, 1392, 1397, 1399, 1401, 1403, 1405, 1414, 1415, 1418, 1420, 1422, 1424, 1426, 1453

[A] PLY ORIENTATION CONVENTION: THE PLY ORIENTATION OF EACH PLY IS DESIGNATED BY A NUMBER (IN DEGREES) REPRESENTING THE ORIENTATION OF THE AXIS PARALLEL TO THE DIRECTION OF FILAMENTS (IN TAPE) OR LONGITUDINALLY ORIENTED YARN (IN A WOVEN FABRIC) WITH RESPECT TO A REFERENCE AXIS. 0 DEGREES IS THE REFERENCE AXIS. THE DIRECTION OF LONGITUDINAL YARN IN A WOVEN FABRIC IS CALLED THE WARP DIRECTION

[B] MATERIAL AND PLY ORIENTATION ARE ALWAYS SHOWN FOR FIELD AREAS. SEE BOEING DRAWINGS FOR EDGE BANDS AND AREAS WITH DOUBLERS WHENEVER THEY ARE NOT SHOWN IN THE MANUAL AS ADJUNCTS TO FIELD AREAS

[C] PREPREG GRAPHITE FABRIC PER BMS 8-212, TYPE IV, CLASS II, STYLE 3K-70-PW

[D] PREPREG GRAPHITE FABRIC PER BMS 8-256, CLASS II, STYLE 3K-70-PW

[E] PREPREG GRAPHITE TAPE PER BMS/8-212, TYPE II, CLASS III, GRADE 190 (CLASS I OPTIONAL)

[F] PREPREG GLASS FABRIC PER BMS/8-139, CLASS I, TYPE 120

[G] PREPREG GRAPHITE FABRIC PER BMS 8-256, CLASS II, TYPE IV, STYLE 3K-70-PW

[H] FOR CUM LINE NUMBERS: 1003, 1012, 1013, 1018, 1020, 1021, 1023 THRU 1027, 1029 THRU 1032, 1034, 1035, 1039 THRU 1120, 1186, 1189, 1194, 1197, 1199, 1203

[I] FOR CUM LINE NUMBERS: 1241, 1245, 1256, 1257, 1261, 1262, 1265, 1266, 1267, 1299, 1313, 1319, 1329, 1342, 1347, 1361, 1369, 1371, 1379, 1387, 1392, 1397, 1399, 1401, 1403, 1405, 1414, 1415, 1418, 1420, 1422, 1424, 1426, 1453, 1456, 1486, 1523, 1530, 1565, 1579, 1581, 1585

Elevator Structure Identification (Graphite Composite Elevator)
Figure 1A (Sheet 1)

[J] PREPREG GRAPHITE FABRIC PER BMS 8-212, TYPE III, CLASS II, STYLE 3K-135-8H

[K] OPTIONAL FOR CUM LINE NUMBERS: 1194, 1197, 1199, 1203

[L] PREPREG GLASS FABRIC PER BMS 8-212, TYPE III, CLASS II, STYLE 3K-135-8H

[M] PREPREG GLASS FABRIC PER BMS 8-139, CLASS I, STYLE 1581.

Elevator Structure Identification (Graphite Composite Elevator)
Figure 1A (Sheet 2)

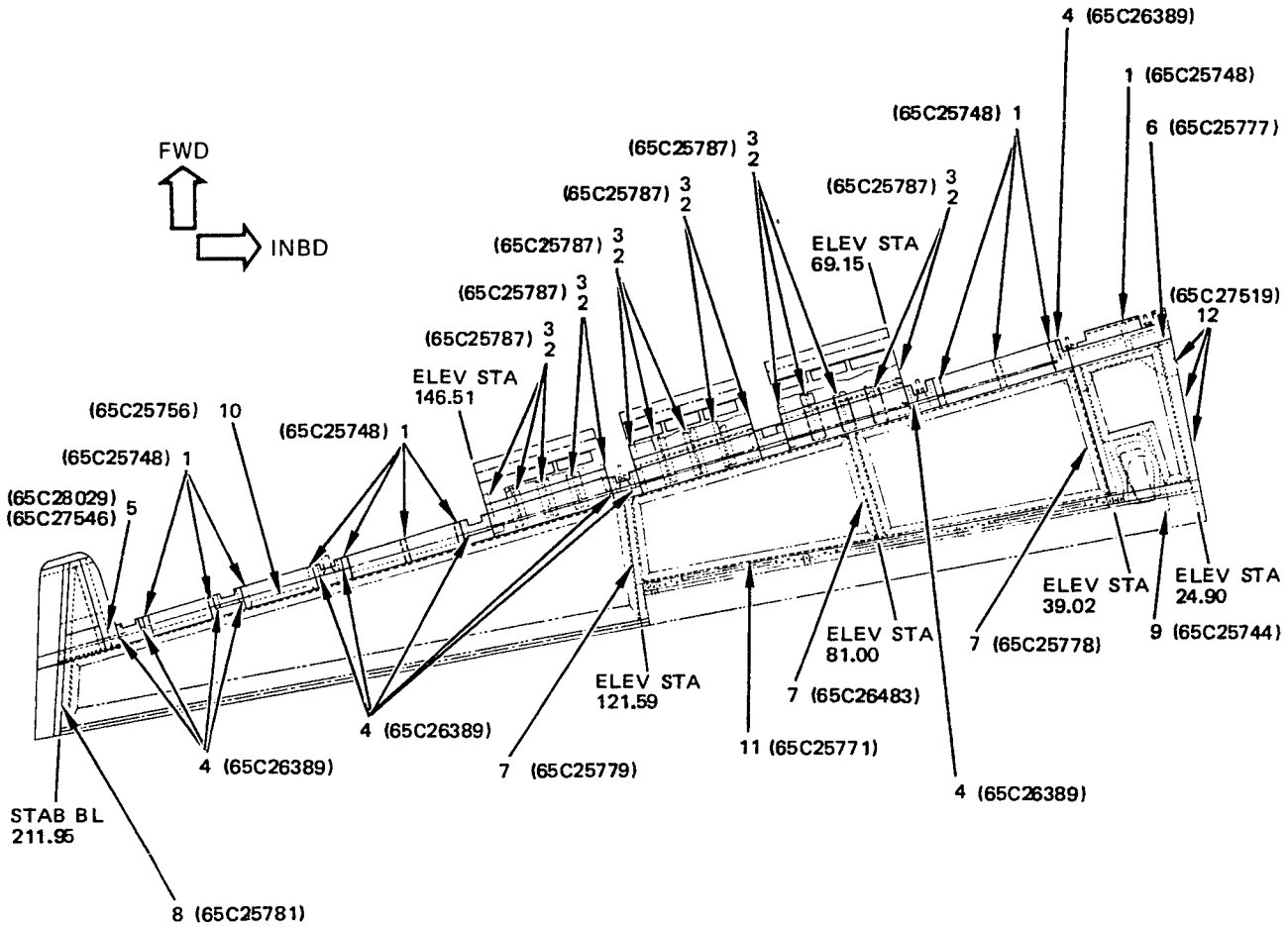


LEFT SIDE – SHOWN
RIGHT SIDE – OPPOSITE
DETAIL I

Elevator Structure Identification (Graphite Composite Elevator)
Figure 1A (Sheet 2)

| ITEM | DESCRIPTION | GAGE | MATERIAL | EFFECTIVITY |
|---|---|---|---|---|
| 1 | LE RIB | 0.050 | CLAD 2024-T42 | |
| 2 | LE RIB | 0.063 | CLAD 2024-T42 | |
| 3 | TOWER RIB | 0.063 | CLAD 2024-T42 | |
| 4 | CLIP | 0.032 | CLAD 2024-T42 | |
| 5 | LE RIB | 1.250 | 7075-T7351 | |
| 6 | INBOARD CLOSURE RIB | | GRAPHITE/EPOXY LAMINATE - SEE DETAIL II | |
| 7 | ELEVATOR RIB<br>SKIN<br>CORE | | GRAPHITE/EPOXY HONEYCOMB SANDWICH<br>SEE DETAIL III<br>NON-METALLIC HONEYCOMB CORE PER BMS 8-124, CLASS IV, TYPE V, GRADE 3.0 | |
| 8 | OUTBOARD CLOSURE RIB<br>RIB<br>CAP | | GRAPHITE/EPOXY LAMINATE<br>SEE DETAIL IV<br>SEE DETAIL V | |
| 9 | TE CLOSURE RIB | | GRAPHITE/EPOXY LAMINATE - SEE DETAIL VI | |
| 10 | FRONT SPAR<br>SKIN<br>CORE | | GLASS/GRAPHITE/EPOXY HONEYCOMB SANDWICH<br>SEE DETAIL VII<br>NON-METALLIC HONEYCOMB CORE PER BMS 8-124, CLASS IV, TYPE V, GRADE 3.0 | |
| 11 | REAR SPAR | | GLASS/GRAPHITE/EPOXY LAMINATE - SEE DETAIL VIII | |
| 12 | STIFFENER | | GRAPHITE/EPOXY LAMINATE - SEE DETAIL IX | |

LIST OF MATERIALS FOR DETAIL I

Elevator Structure Identification (Graphite Composite Elevator)
Figure 1A (Sheet 2A)

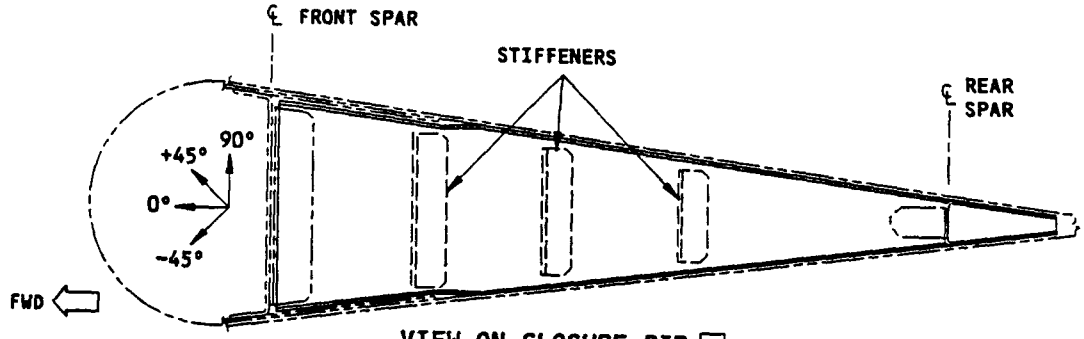


VIEW ON CLOSURE RIB [A]

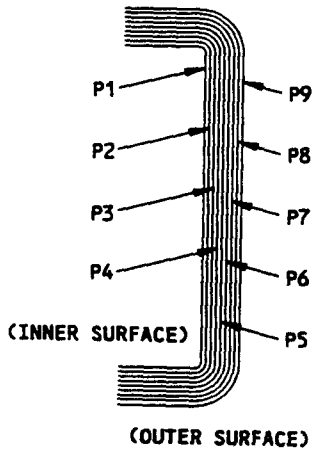


SECTION THRU LAMINATE
INBOARD CLOSURE RIB [H]

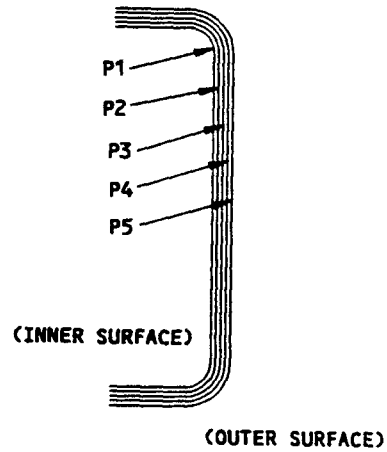


SECTION THRU LAMINATE
INBOARD CLOSURE RIB [I]

| ITEM NO. | PLY NO. | MATERIAL | PLY ORIENTATION |
|---|---|---|---|
| 6 [H] | P1,P3, P6,P8 | [C] | 0° OR 90° |
| | P2,P4, P5,P7 | [C] | ±45° |
| | P9 | [F] | OPTIONAL |
| 6 [I] | P1 | [J] | 90° |
| | P2 | [J] | +45° |
| | P3 | [J] | -45° |
| | P4 | [J] | 0° |
| | P5 | [M] | 0° OR 90° |

PLY TABLE FOR INBD CLOSURE RIB [B]
DETAIL II
Elevator Structure Identification
Figure 1A (Sheet 3)

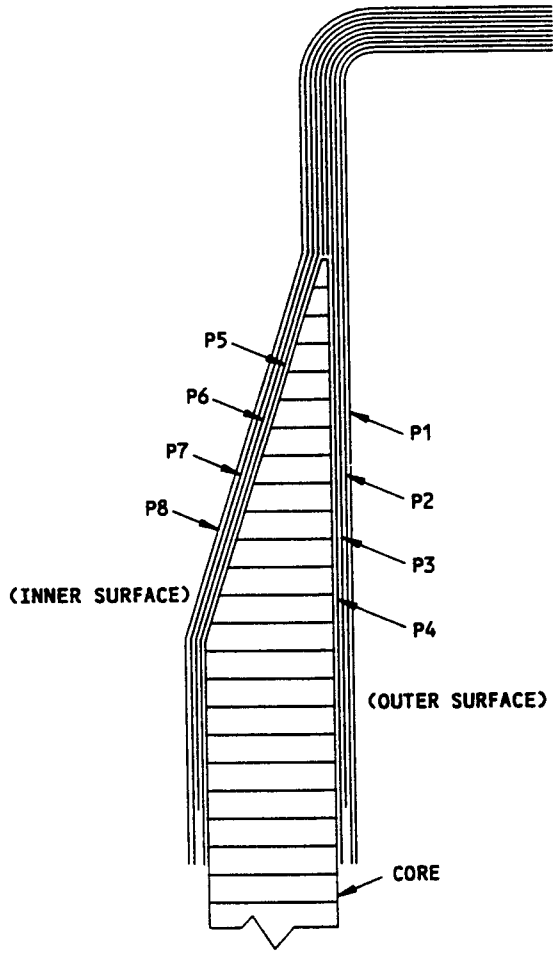


SECTION THRU HONEYCOMB RIB
ELEVATOR STA 39.02

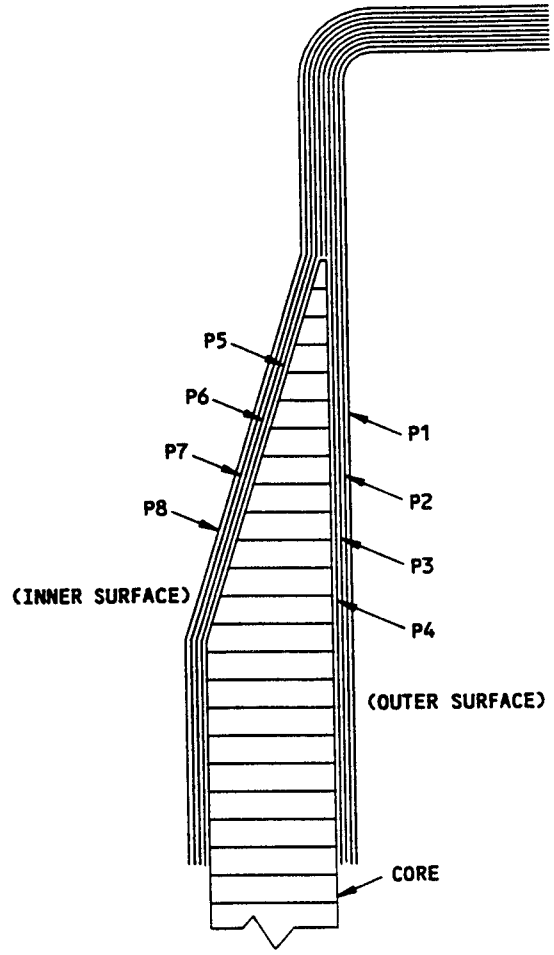


SECTION THRU HONEYCOMB RIB
ELEVATOR STA 81.00 AND 121.59

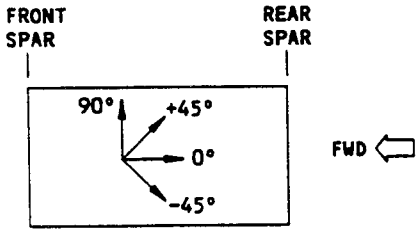


VIEW ON RIB A

| ITEM NO. | PLY NO. | MATERIAL | PLY ORIENTATION |
|---|---|---|---|
| 7 H | P1,P3, P6,P8 | D | 0° OR 90° |
| | P2,P4, P5,P7 | D | ±45° |
| 7 I | P1,P3, P6,P8 | G | 0° OR 90° |
| | P2,P4, P5,P7 | G | ±45° |

PLY TABLE FOR RIBS B

DETAIL III

Elevator Structure Identification (Graphite Composite Elevator)
Figure 1A (Sheet 4)

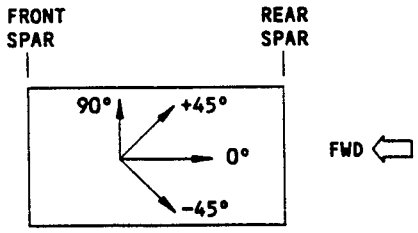


VIEW ON RIB [A]

| ITEM NO. | PLY NO. | MATERIAL | PLY ORIENTATION |
|---|---|---|---|
| 8 | P2,P4, P5,P7 | [C] | ±45° |
| | P1,P3, P6,P8 | [C] | 0° OR 90° |

PLY TABLE [B]

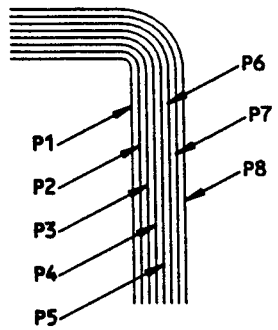


SECTION THRU RIB
STAB BL 211.95

| ITEM NO. | PLY NO. | MATERIAL | PLY ORIENTATION |
|---|---|---|---|
| 8 | P1 | [J] | 90° |
| | P2 | [J] | +45° |
| | P3 | [J] | -45° |
| | P4 | [J] | 0° |
| | P5 | [F] | 0° OR 90° |

PLY TABLE [B] [K]

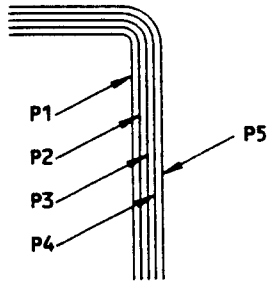


SECTION THRU RIB [K]
STAB BL 211.95

DETAIL IV

Elevator Structure Identification (Graphite Composite Elevator)
Figure 1A (Sheet 5A)

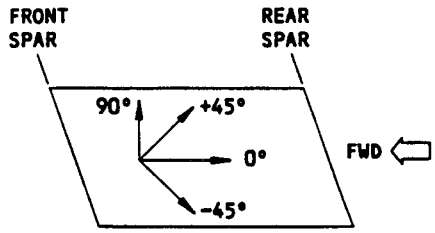


VIEW ON RIB [A]

| ITEM NO. | PLY NO. | MATERIAL | PLY ORIENTATION |
|---|---|---|---|
| 8 | P1,P3, P6 | [E] | +45° |
| | P2,P4, P5 | [E] | -45° |
| | P8,P10 | [E] | 90° |
| | P9 | [E] | 0° |
| | P7,P11 | [C] | 0° OR 90° |

PLY TABLE [B]

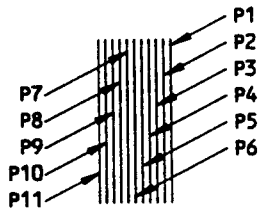


SECTION THRU CAP
STAB BL 211.95

DETAIL V

Elevator Structure Identification (Graphite Composite Elevator)
Figure 1A (Sheet 5B)

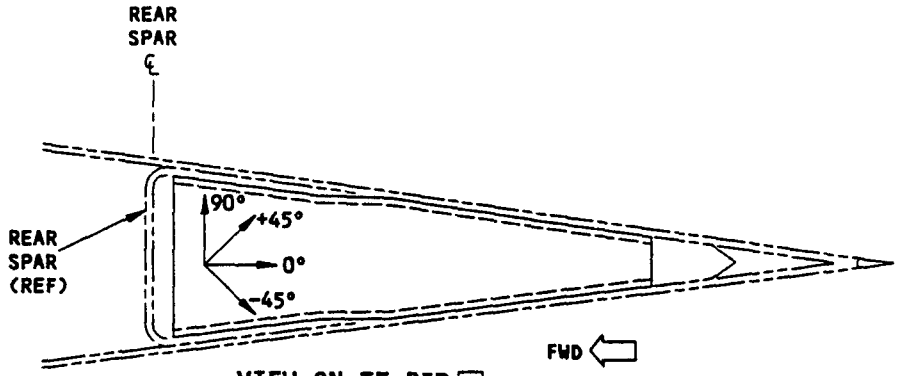


VIEW ON TE RIB [B]

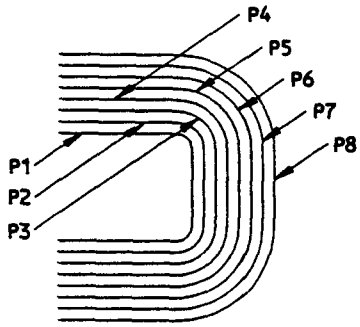


SECTION THRU RIB
ELEVATOR STA 31.42 [H]

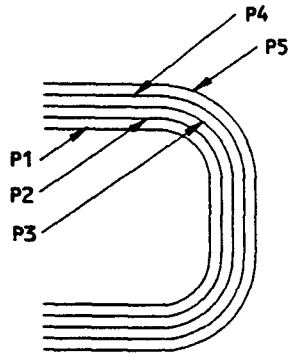


SECTION THRU RIB
ELEVATOR STA 31.42 [I]

| ITEM NO. | PLY NO. | MATERIAL | PLY ORIENTATION |
|---|---|---|---|
| 9 [H] | P1,P3, P6,P8 | [C] | 0° OR 90° |
| | P2,P4, P5,P7 | [C] | ±45° |
| 9 [I] | P1 | [J] | 90° |
| | P2 | [J] | +45° |
| | P3 | [J] | -45° |
| | P4 | [J] | 0° |
| | P5 | [F] | 0° OR 90° |

PLY TABLE [B]
DETAIL VI

Elevator Structure Identification
Figure 1 (Sheet 6)

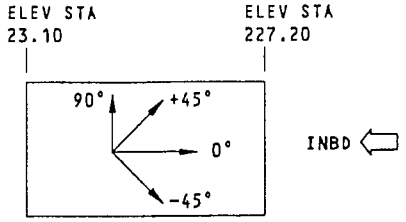


VIEW ON FRONT SPAR A

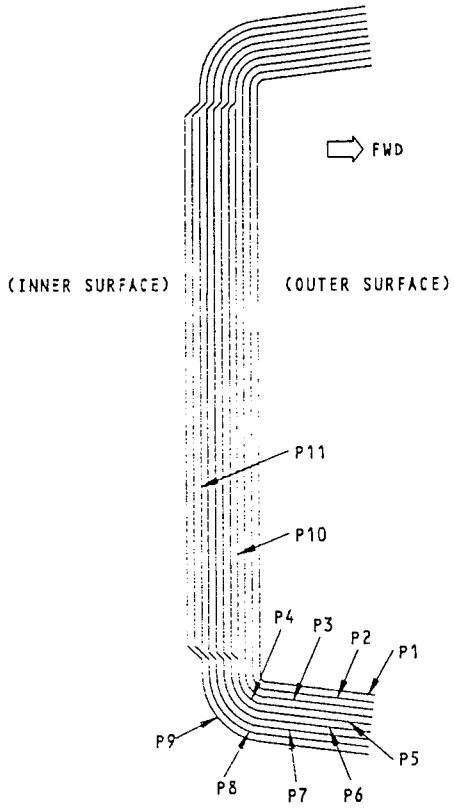


SECTION THRU FRONT SPAR
ELEVATOR STA 24.90

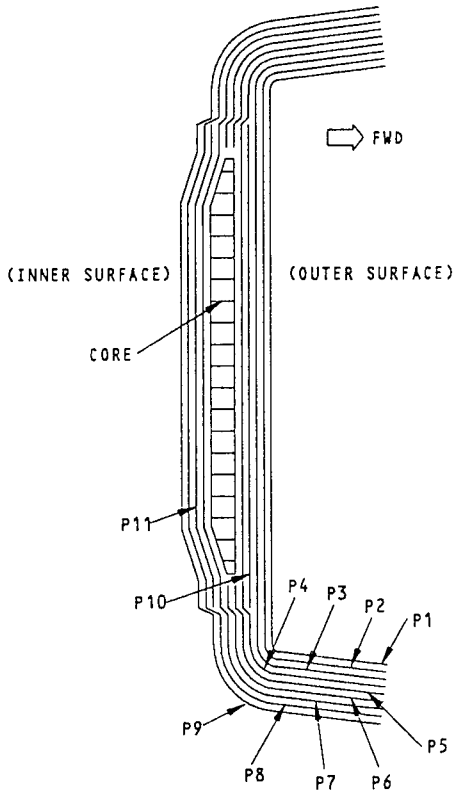


SECTION THRU FRONT SPAR
ELEVATOR STA 47.02

NOTE: SEE END OF DETAIL VII FOR PLY TABLE.

DETAIL VII
(DETAIL CONT ON NEXT PAGE)

Elevator Structure Identification (Graphite Composite Elevator)
Figure 1A (Sheet 7)

114492

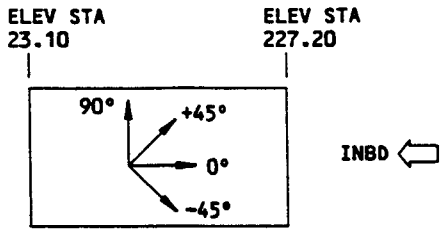


VIEW ON FRONT SPAR A

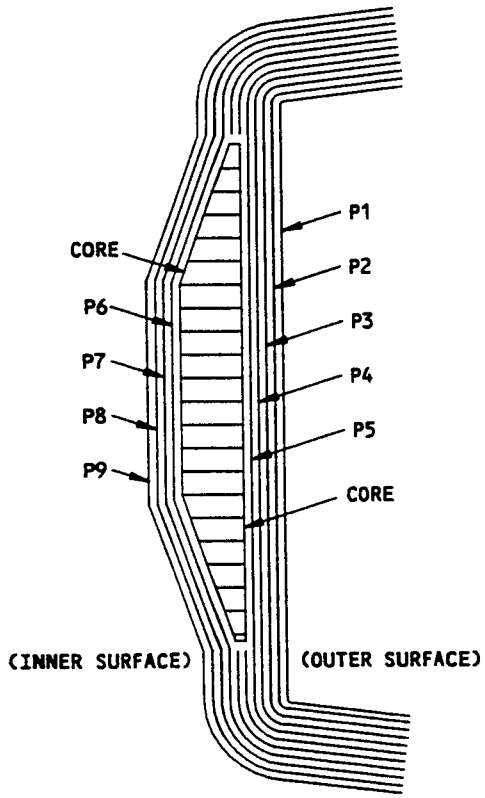


SECTION THRU FRONT SPAR
ELEVATOR STA 60.00

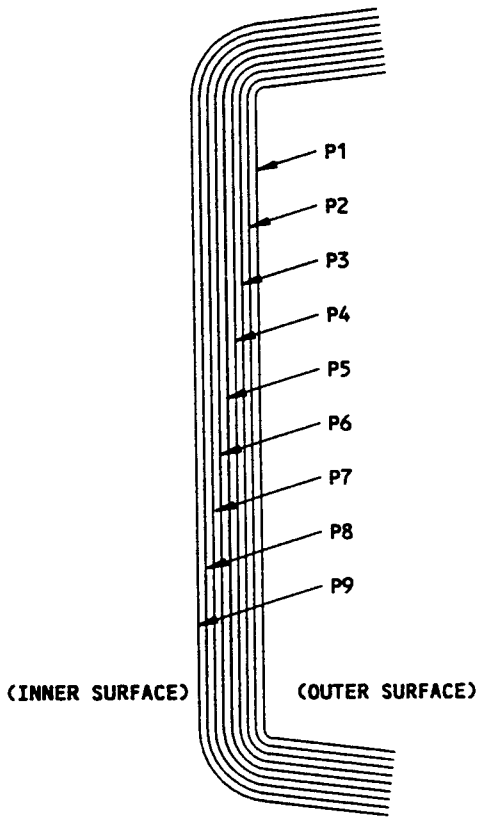


SECTION THRU FRONT SPAR
ELEVATOR STA 66.54, 94.00, 176.64

NOTE: SEE END OF DETAIL VII FOR PLY TABLE.

DETAIL VII (CONT)
(DETAIL CONT ON NEXT PAGE)

Elevator Structure Identification (Graphite Composite Elevator)
Figure 1A (Sheet 8)

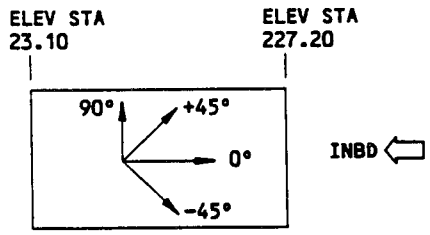


VIEW ON FRONT SPAR A

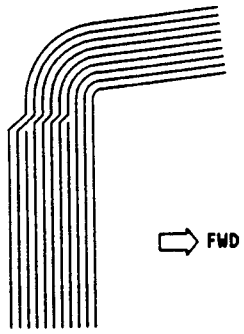


(INNER SURFACE) (OUTER SURFACE)

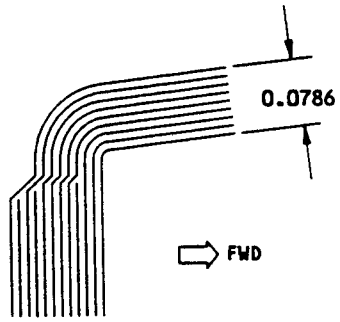


(INNER SURFACE) (OUTER SURFACE)

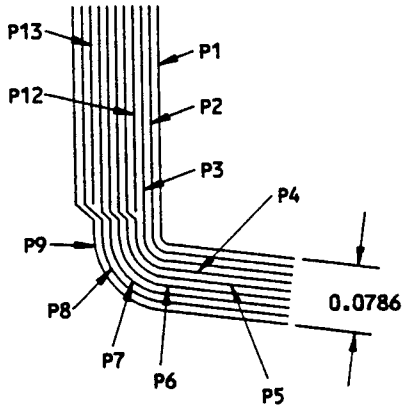


SECTION THRU FRONT SPAR
ELEVATOR STA 100.00

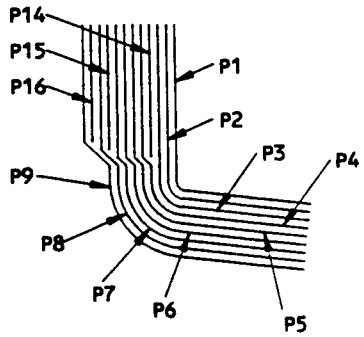


SECTION THRU FRONT SPAR
ELEVATOR STA 154.15

NOTE: SEE END OF DETAIL VII FOR PLY TABLE.

DETAIL VII (CONT)
(DETAIL CONT ON NEXT PAGE)

Elevator Structure Identification (Graphite Composite Elevator)
Figure 1A (Sheet 9)

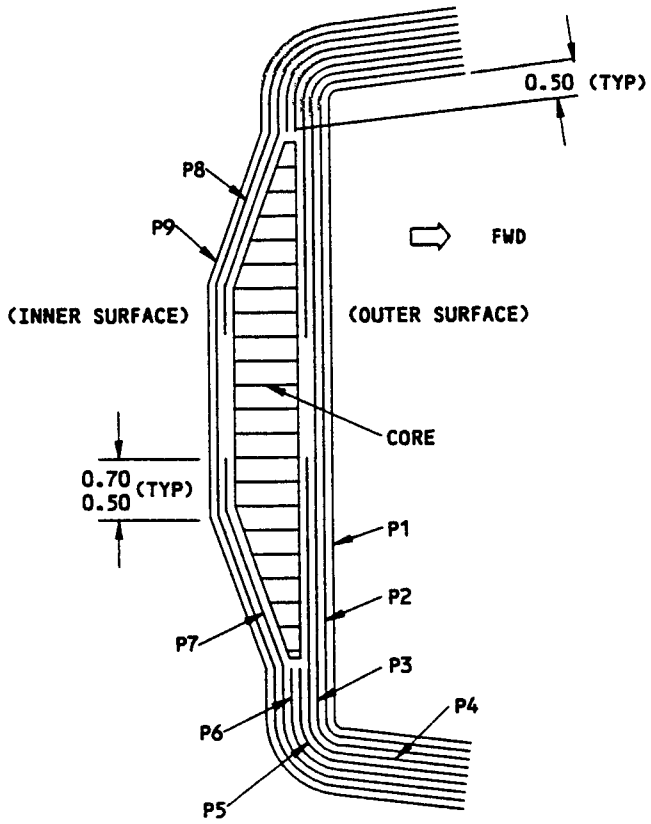


SECTION THRU FRONT SPAR
ELEVATOR STA 168.15

| ITEM NO. | PLY NO. | MATERIAL | PLY ORIENTATION |
|---|---|---|---|
| 10 | P1 | F | OPTIONAL |
| | P3,P8 | D | ±45° |
| | P2,P4, P7,P9 | D | 0° OR 90° |
| | P5,P6 | D | ±45° |
| | P10 THRU P16 | D | ±45° |

PLY TABLE FOR FRONT SPAR B

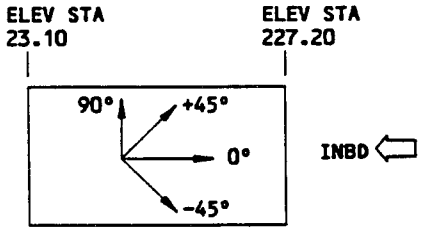


VIEW ON FRONT SPAR A

DETAIL VII (CONT)

Elevator Structure Identification (Graphite Composite Elevator)
Figure 1A (Sheet 10)

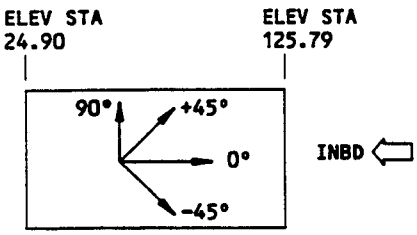


VIEW ON REAR SPAR [A]

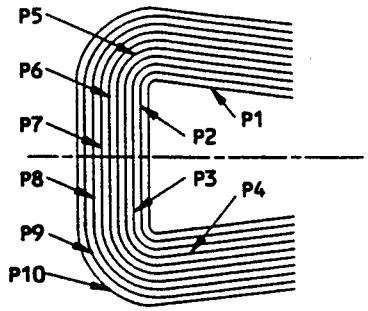


SECTION THRU REAR SPAR

| ITEM NO. | PLY NO. | MATERIAL | PLY ORIENTATION |
|---|---|---|---|
| 11 | P2,P10 | [E] | +45° |
| | P4,P8 | [E] | -45° |
| | P3,P6, P9 | [E] | 90° |
| | P5,P7 | [E] | 0° |
| | P1 | [F] | OPTIONAL |

PLY TABLE [B]

DETAIL VIII

Elevator Structure Identification (Graphite Composite Elevator)
Figure 1A (Sheet 11)

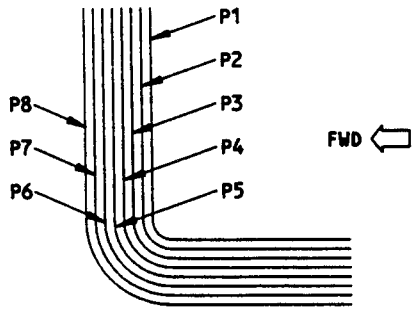


SECTION THRU STIFFENER

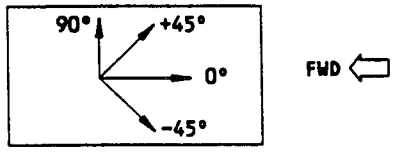


VIEW ON STIFFENER A

| ITEM NO. | PLY NO. | MATERIAL | PLY ORIENTATION |
|---|---|---|---|
| 12 | P1,P3, P6,P8 | C | ±45° |
| | P2,P4 P5,P7 | C | 0° OR 90° |

PLY TABLE B

DETAIL IX

Elevator Structure Identification (Graphite Composite Elevator)
Figure 1A (Sheet 12)

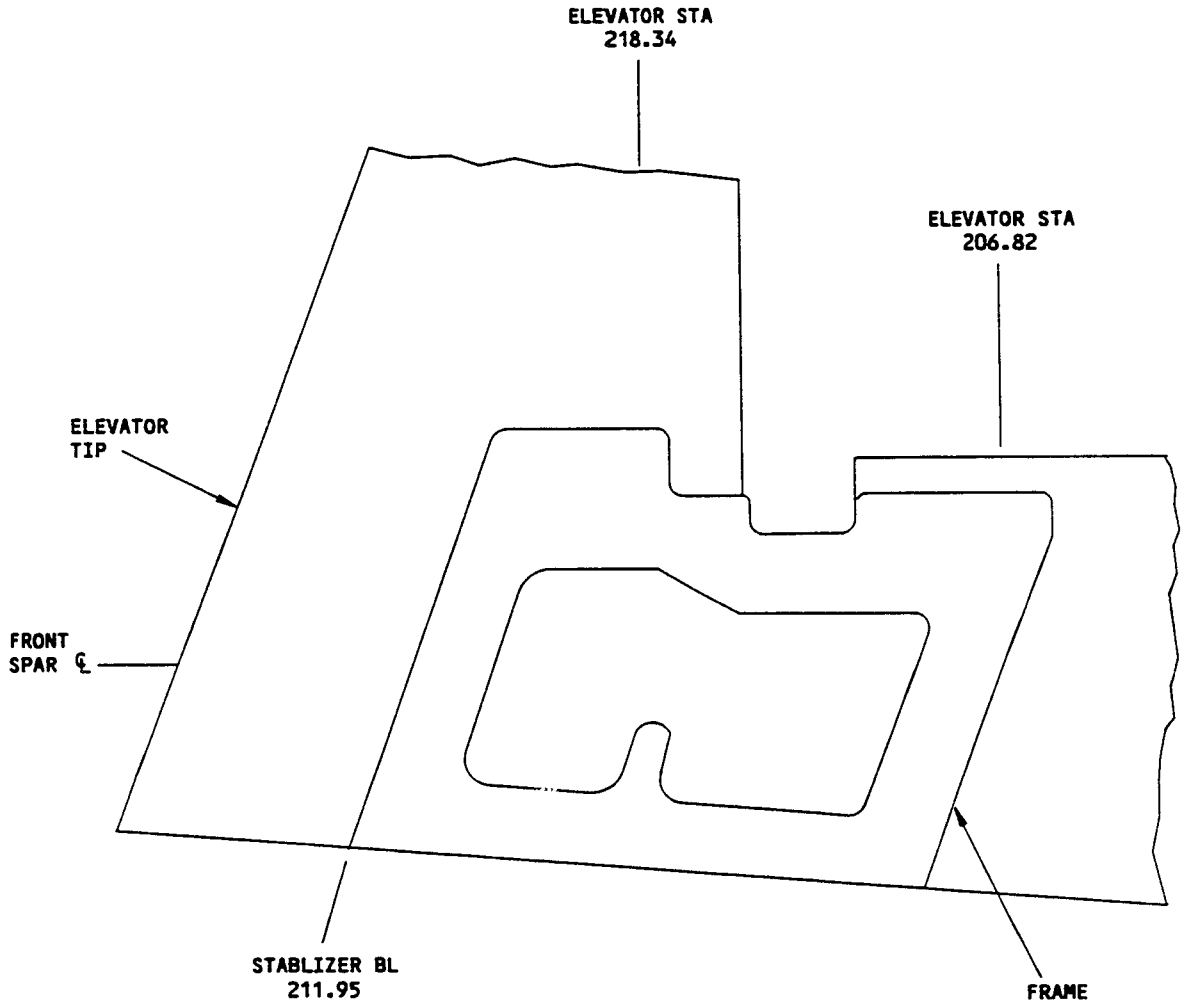


LIGHTNING STRIKE PROTECTION FRAME

DETAIL X [G]

Elevator Structure Identification (Graphite Composite Elevator)
Figure 1A (Sheet 13)

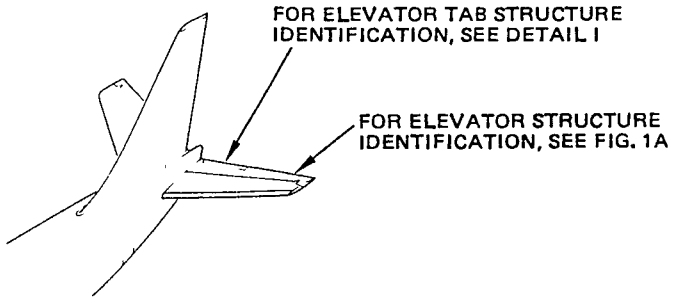


NOTES

THIS FIGURE APPLIES TO ELEVATOR FAIRINGS ON GRAPHITE COMPOSITE ELEVATORS DELIVERED ON 737-200 AIRPLANES,
CUM LINE NUMBERS:
1003, 1012, 1013, 1018, 1020, 1021, 1023 THRU 1027, 1029 THRU 1032, 1034, 1035, 1036, 1039 THRU 1120, 1186, 1189, 1194, 1197, 1199, 1203, 1241, 1245, 1256, 1257, 1261, 1262, 1265, 1266, 1267, 1299, 1313, 1319, 1329, 1342, 1347, 1361, 1369, 1371, 1379, 1387, 1392, 1397, 1399, 1401, 1403, 1405, 1414, 1415, 1418, 1420, 1422, 1424, 1426, 1453, 1486 (BOEING REF: PZ447, P4341 THRU P4399, P4801 THRU P5499, P8979 THRU P9995)

[A] PLY ORIENTATION CONVENTION: THE PLY ORIENTATION OF EACH PLY IS DESIGNATED BY A NUMBER (IN DEGREES) REPRESENTING THE ORIENTATION OF THE AXIS PARALLEL TO THE DIRECTION OF FILAMENTS (IN TAPE) OR LONGITUDINALLY ORIENTED YARN (IN A WOVEN FABRIC) WITH RESPECT TO A REFERENCE AXIS. 0 DEGREES IS THE REFERENCE AXIS. THE DIRECTION OF LONGITUDINAL YARN IN A WOVEN FABRIC IS CALLED THE WARP DIRECTION

[B] MATERIAL AND PLY ORIENTATION ARE ALWAYS SHOWN FOR FIELD AREAS, SEE BOEING DRAWINGS FOR EDGE BANDS AND AREAS WITH DOUBLERS WHENEVER THEY ARE NOT SHOWN IN THE MANUAL AS ADJUNCTS TO FIELD AREAS

[C] PREPREG GRAPHITE TAPE PER BMS 8-212, TYPE II, CLASS I, GRADE 95

[D] PREPREG GLASS FABRIC PER BMS 8-139, TYPE 120

Elevator Tab Structure Identification
(Graphite Composite Elevator)
Figure 1B (Sheet 1)

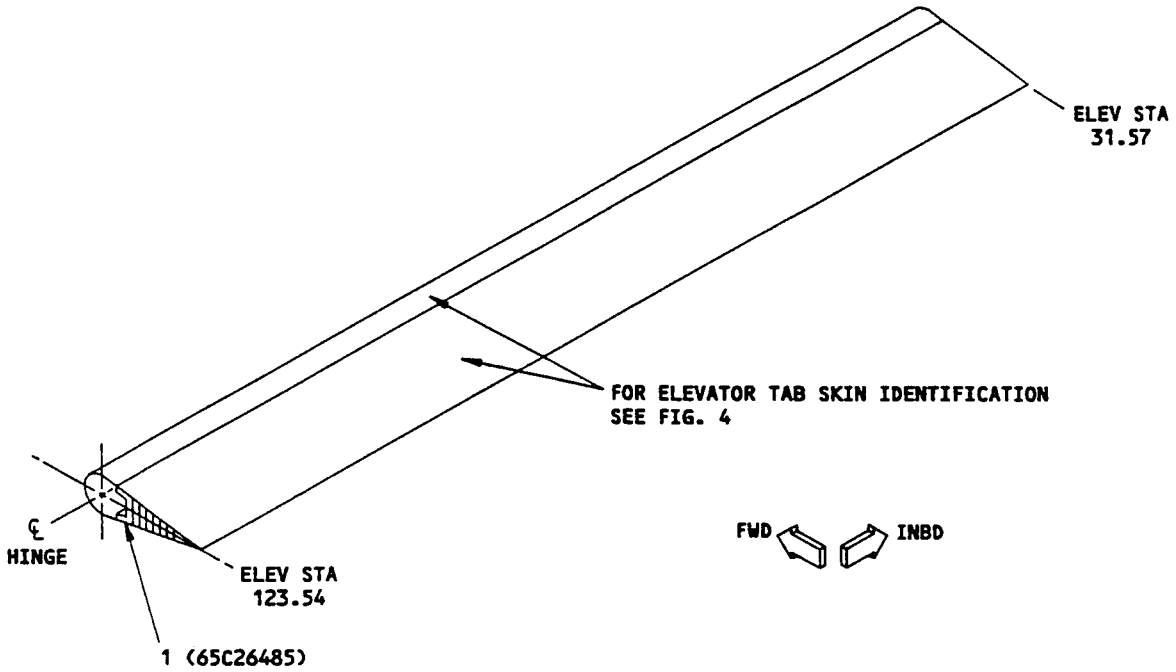


LEFT SIDE SHOWN
RIGHT SIDE SIMILAR
DETAIL I

| ITEM | DESCRIPTION | GAGE | MATERIAL | EFFECTIVITY |
|---|---|---|---|---|
| 1 | SPAR | | GLASS/GRAPHITE/EPOXY LAMINATE - SEE DETAIL II | |

LIST OF MATERIALS FOR DETAIL I

Elevator Tab Structure Identification (Graphite Composite Elevator)
Figure 1B (Sheet 2)

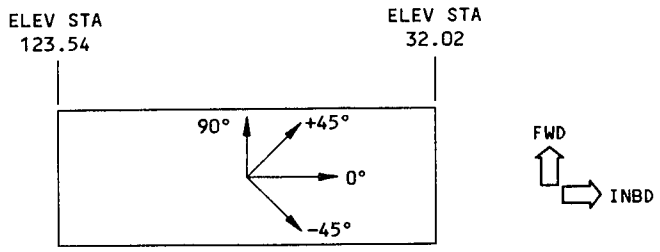


VIEW ON PANELS [A]

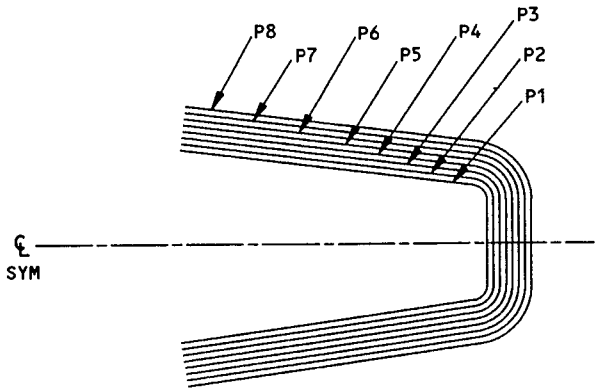


SECTION THRU ELEVATOR TAB SPAR

| ITEM NO. | PLY NO. | MATERIAL | PLY ORIENTATION |
|---|---|---|---|
| 2 | P1 | [D] | 0° OR 90° |
| | P2,P8 | [C] | +45° |
| | P4,P6 | [C] | -45° |
| | P5 | [C] | 0° |
| | P3,P7 | [C] | 90° |

PLY TABLE [B]

DETAIL II

Elevator Tab Structure Identification (Graphite Composite Elevator)
Figure 1B (Sheet 3)

REF DWG
65-73799

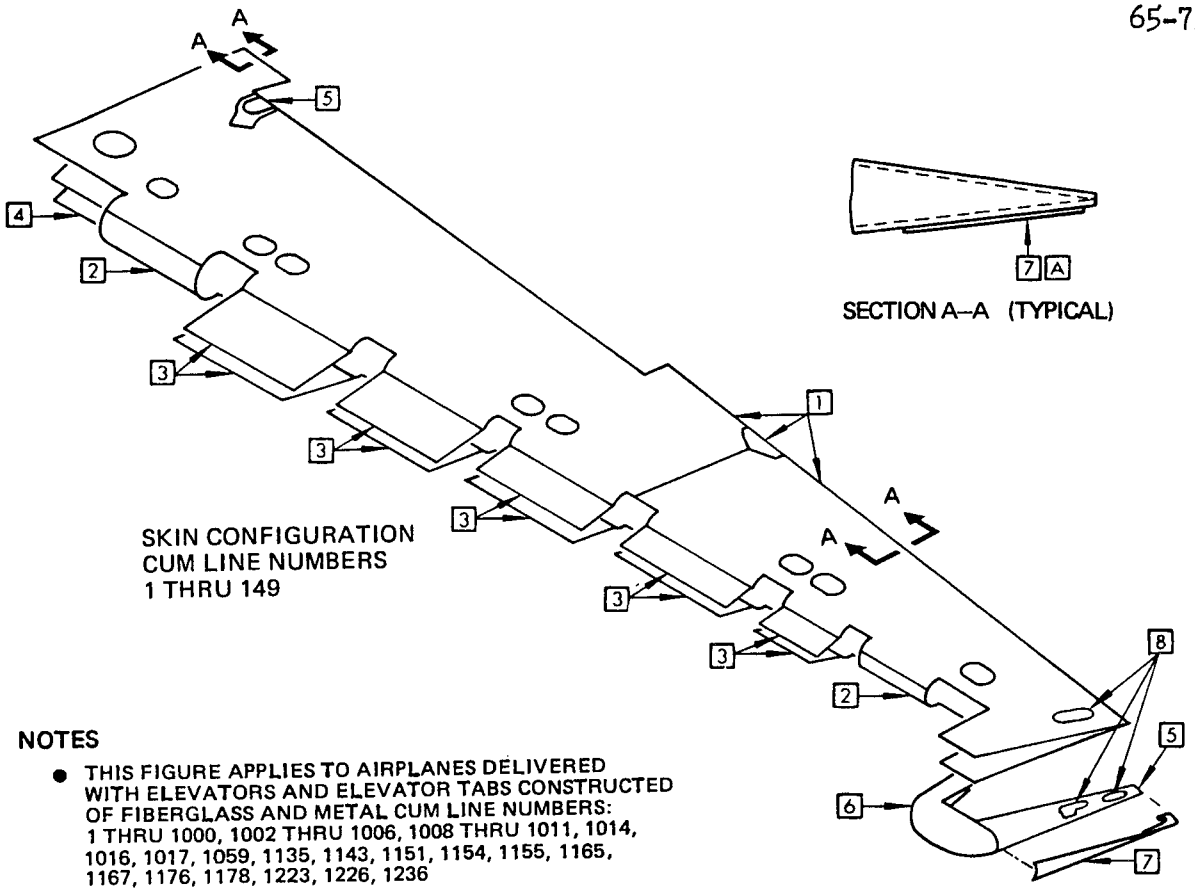


**NOTES**

- THIS FIGURE APPLIES TO AIRPLANES DELIVERED WITH ELEVATORS AND ELEVATOR TABS CONSTRUCTED OF FIBERGLASS AND METAL CUM LINE NUMBERS: 1 THRU 1000, 1002 THRU 1006, 1008 THRU 1011, 1014, 1016, 1017, 1059, 1135, 1143, 1151, 1154, 1155, 1165, 1167, 1176, 1178, 1223, 1226, 1236

[A] FOR CUM LINE NUMBERS:
38, 54

[B] FOR AIRPLANES NOT IN [C]

[C] FOR CUM LINE NUMBERS:
1034, 1036, 1040 THRU 1042, 1044 THRU 1047, 1049, 1050, 1051, 1053 THRU 1056, 1058 THRU 1062, 1064, THRU 1068, 1070 THRU 1072, 1074, 1075, 1077, THRU 1079, 1081, 1082, 1084, THRU 1086, 1088, 1089, 1091, 1093, 1095, 1097, 1099, 1102, 1105, 1109, 1113, 1117, 1120, 1186, 1189, 1194, 1197, 1199, 1203, 1241, 1245, 1256, 1257, 1261, 1262, 1265 THRU 1267, 1299, 1319, 1329, 1342, 1347, 1361, 1369, 1371, 1379, 1387, 1392, 1397, 1399, 1401, 1403, 1414, 1418, 1420, 1422, 1424, 1426, 1453, 1456, 1486 (BOEING REF: P4253 THRU P4399, P4801 THRU P5499, P8979 THRU P9995)

Elevator Skin Identification
(Fiberglass/Metal Elevator)
Figure 2 (Sheet 1)

| ITEM | MATERIAL | REPAIR FIG. NO. |
|---|---|---|
| 1 | GLASS FABRIC HONEYCOMB PANEL | 51-40-9 |
| 2 | 0.016 CLAD + 0.016 CLAD 2024-T3 | |
| 3 | 0.010 CLAD + 0.010 CLAD 2024-T3 | |
| 4 | 0.050 CLAD 2024-T42 | |

| ITEM | MATERIAL | REPAIR FIG. NO. |
|---|---|---|
| 5 | PLASTIC GLASS FABRIC REINFORCED LAMINATE | 51-40-9 |
| 6 | 0.071 2024-T42 | |
| 7 | LIGHTNING DIVERTER 0.020 6061-T6 | |
| 8 | STATIC DISCHARGER STRAP 0.032 CLAD 2024-T3 | |

Elevator Skin Identification
(Fiberglass/Metal Elevator)
Figure 2 (Sheet 1A)

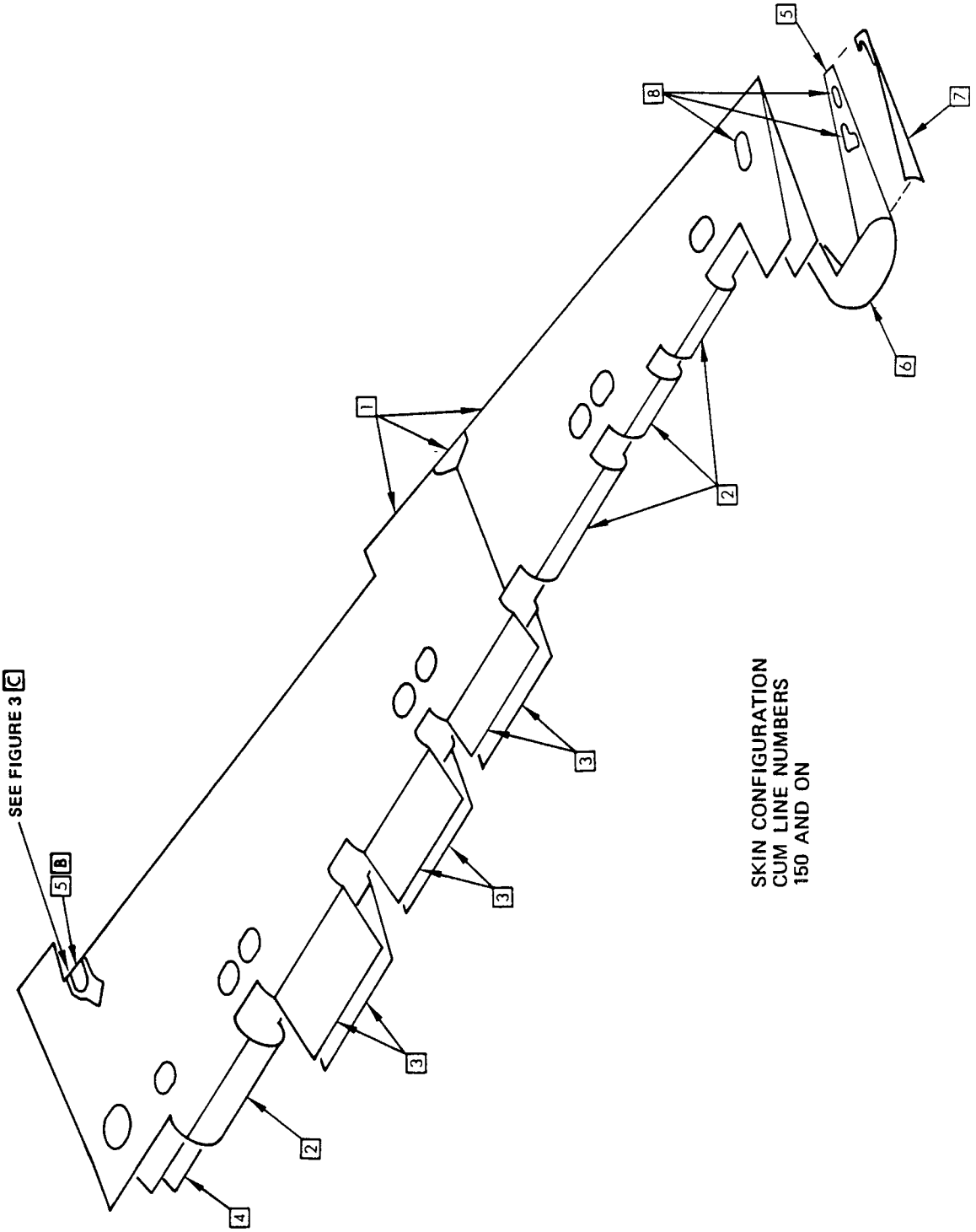


Elevator Skin Identification
(Fiberglass/Metal Elevator)
Figure 2 (Sheet 2)

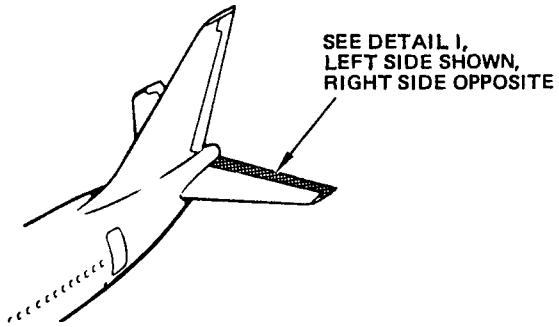


NOTES

- THIS FIGURE APPLIES TO 737-200 AIRPLANES WITH GRAPHITE COMPOSITE ELEVATOR SKIN PANEL ASSEMBLIES

  CUM LINE NUMBERS:
  1003, 1012, 1013, 1018, 1020, 1021, 1023 THRU 1027, 1029 THRU 1032, 1034, 1035, 1036, 1039, 1040, 1041, 1042, 1044, 1045, 1046, 1047, 1049, 1051, 1053, 1055, 1056, 1058, 1059, 1060, 1061, 1062, 1064, 1065, 1066, 1067, 1068, 1069, 1072, 1074, 1075, 1077, 1078, 1079, 1081, 1082, 1084, 1085, 1086, 1089, 1091, 1093, 1095, 1097, 1102, 1105, 1109, 1113, 1117, 1120, 1186, 1189, 1194, 1197, 1199, 1203, 1241, 1245, 1256, 1257, 1261, 1262, 1265, 1266, 1267, 1299, 1313, 1319, 1329, 1342, 1347, 1361, 1369, 1371, 1379, 1387, 1392, 1397, 1399, 1401, 1403, 1405, 1414, 1415, 1418, 1420, 1422, 1424, 1426, 1453, 1456, 1486, 1576, 1587 (BOEING REF: PZ447, P4349 THRU P4399, P4801 THRU P5499, P8979 THRU P9945)

A PLY ORIENTATION CONVENTION: THE PLY ORIENTATION OF EACH PLY IS DESIGNATED BY A NUMBER (IN DEGREES) REPRESENTING THE ORIENTATION OF THE AXIS PARALLEL TO THE DIRECTION OF FILAMENTS (IN TAPE) OR LONGITUDINALLY ORIENTED YARN (IN A WOVEN FABRIC) WITH RESPECT TO A REFERENCE AXIS. 0 DEGREES IS THE REFERENCE AXIS. THE DIRECTION OF LONGITUDINAL YARN IN A WOVEN FABRIC IS CALLED THE WARP DIRECTION

B MATERIAL AND PLY ORIENTATION ARE ALWAYS SHOWN FOR FIELD AREAS. SEE BOEING DRAWINGS FOR EDGE BANDS AND AREAS WITH DOUBLERS WHENEVER THEY ARE NOT SHOWN IN THE MANUAL AS ADJUNCTS TO FIELD AREAS

C PREPREG GRAPHITE TAPE PER BMS 8-212, TYPE II, CLASS III, GRADE 95 (OPTIONAL - CLASS I)

D CORE RIBBON DIRECTION - TYPICAL EXCEPT AS SHOWN

E PLIES AT RIB LOCATIONS MAY BE ORIENTATED WITH 90° DIRECTION PARALLEL TO EDGE OF CORE

Elevator Skin (Graphite Composite Elevator)
Figure 3 (Sheet 1)

[F] PLIES AT THE PANEL TRAILING EDGE MAY BE ORIENTATED WITH 0° DIRECTION PARALLEL TO TRAILING EDGE

[G] EPOXY IMPREGNATED GRAPHITE FABRIC BMS 8-212, TYPE IV, CLASS II

[H] GLASS FABRIC PER BMS 8-139, TYPE 120

[I] FOR CUM LINE NUMBERS: 1012, 1013, 1018, 1020, 1021, 1023 THRU 1027, 1029 THRU 1032, 1034 THRU 1036, 1039 THRU 1453, 1486 (BOEING REF: P4349 THRU P4399, P4801 THRU P5499, P8979 THRU P9995)

[J] FOR CUM LINE NUMBERS: 1002, 1025, 1032, 1034, 1036, 1040, 1042, 1046, 1113, 1117, 1120, 1165, 1176 (BOEING REF: P8979 THRU P8980)

[K] FOR CUM LINE NUMBERS: 1178 THRU 1453, 1486 (BOEING REF: P4349 THRU P4399, P4801 THRU P5499, P8979 THRU P9995)

[L] FOR AIRPLANES INCORPORATING SB 51-1011

[M] FOR CUM LINE NUMBERS: 1256 THRU 1405

Elevator Skin Identification (Graphite Composite Elevator)
Figure 3 (Sheet 1A)

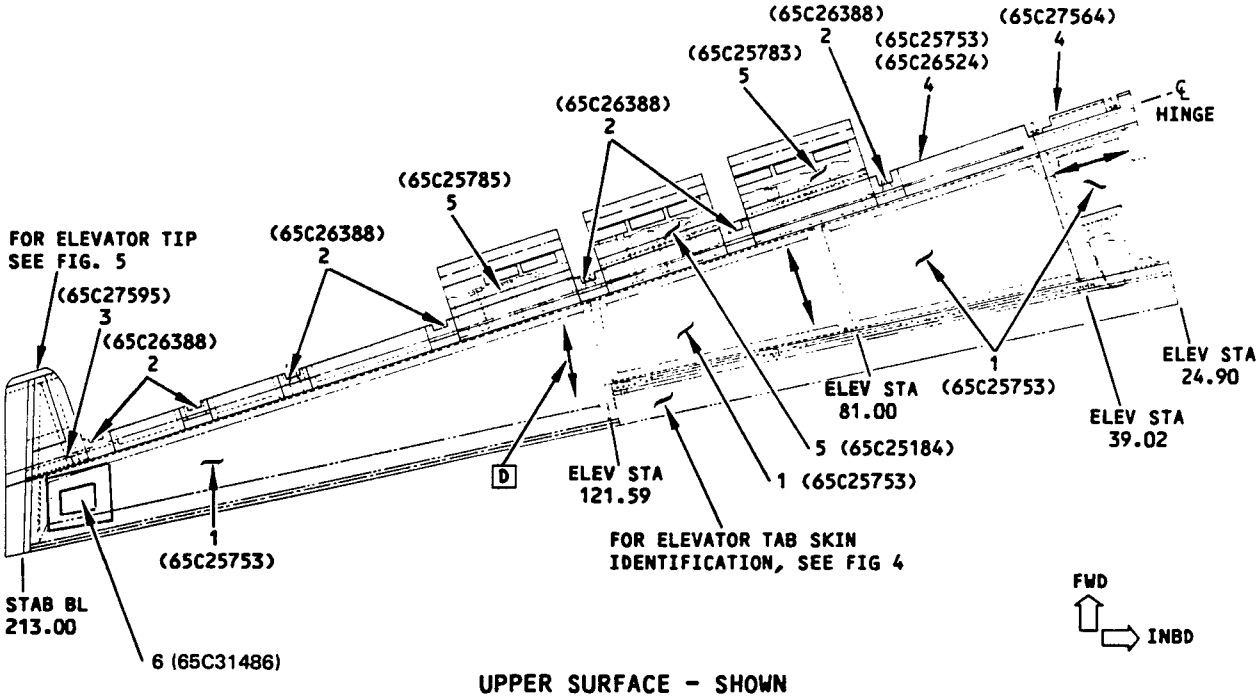


UPPER SURFACE - SHOWN
LOWER SURFACE - OPPOSITE

DETAIL I

| ITEM | DESCRIPTION | GAGE | MATERIAL | EFFECTIVITY |
|---|---|---|---|---|
| 1 | SKIN PANEL ASSY | | GRAPHITE/EPOXY HONEYCOMB SANDWICH | |
| | SKIN | | SEE DETAIL II | I |
| | | | SEE DETAIL III | J |
| | | | SEE DETAIL IV | K |
| | CORE | | NON-METALLIC HONEYCOMB PER BMS 8-124, CLASS IV, TYPE V, GRADE 3.0 | |
| 2 | HINGE COVER PANEL - UPR,LWR | 0.070 | CLAD 2024-T3 | |
| 3 | SKIN PANEL ASSY - UPR,LWR | | | |
| | SKIN PANEL | 0.070 | CLAD 2024-T3 | |
| | DOUBLER | 0.063 | CLAD 2024-T3 | |
| | FILLER | 0.080 | CLAD 2024-T3 | |
| 4 | INBD HINGE COVER PANEL BOND ASSY | | | |
| | PANEL | 0.070 | CLAD 2024-T42 | |
| | DOUBLER | 0.032 | CLAD 2024-T3 | |
| 5 | BALANCE PANEL | 0.05 | CLAD 2024-T3 | |
| 6 | FRAME | 0.020 | 6061—T4— SEE DETAIL V | L M |

LIST OF MATERIALS FOR DETAIL I

Elevator Skin Identification (Graphite Composite Elevator)
Figure 3 (Sheet 2)

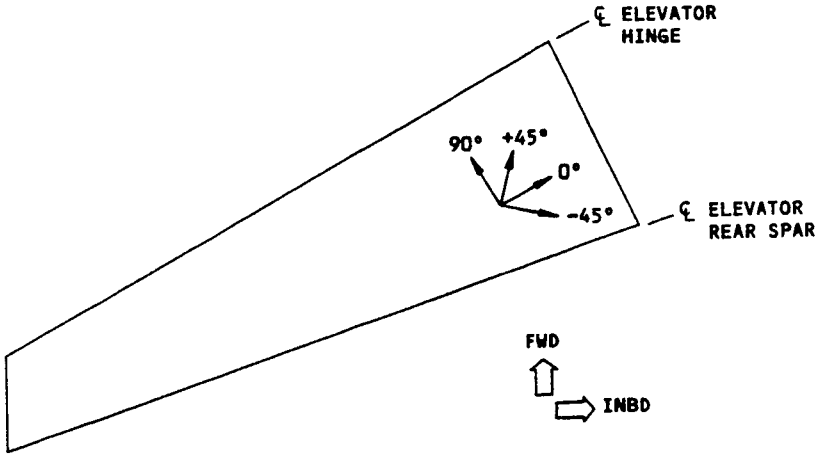


VIEW ON PANELS A

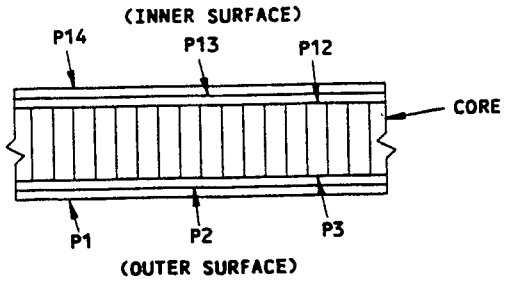


SECTION THRU HONEYCOMB PANEL

| ITEM NO. | PLY NO. | MATERIAL | PLY ORIENTATION |
|---|---|---|---|
| 1 | P1,P14 | C | +45° |
| | P2,P13 | C | 0° |
| | P3,P12 | C | -45° |

PLY TABLE B

DETAIL II

Elevator Skin Identification (Graphite Composite Elevator)
Figure 3 (Sheet 3)

114590

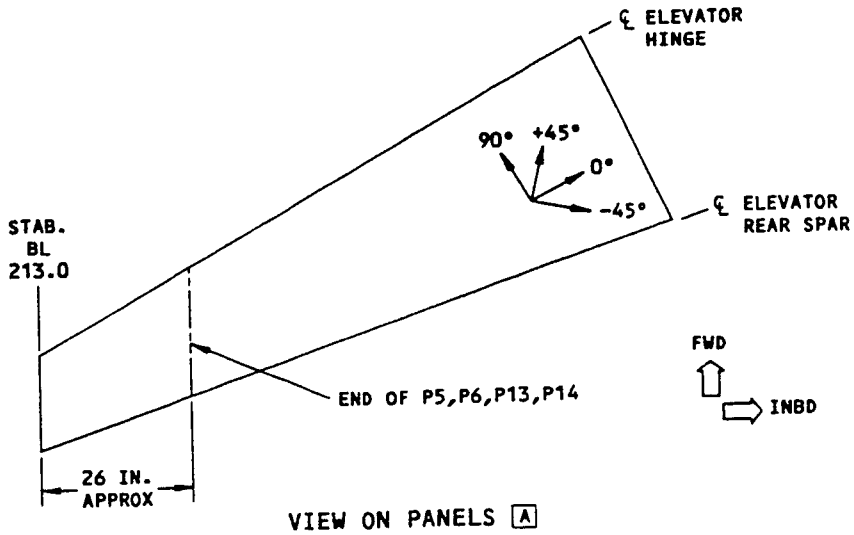


VIEW ON PANELS [A]

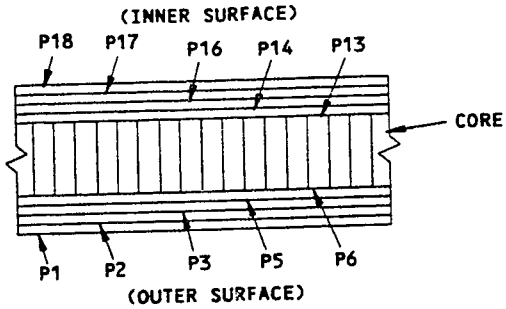


SECTION THRU HONEYCOMB PANEL

| ITEM NO. | PLY NO. | MATERIAL | PLY ORIENTATION |
|---|---|---|---|
| 1 | P1,P18 | [C] | +45° |
| | P2,P17 | [C] | 0° |
| | P3,P16 | [C] | -45° |
| | P5,P14 | [G] | 0° OR 90° [E] [F] |
| | P6,P13 | [G] | ±45° [E] [F] |

PLY TABLE [B]

DETAIL III

Elevator Skin Identification (Graphite Composite Elevator)
Figure 3 (Sheet 4)

186658

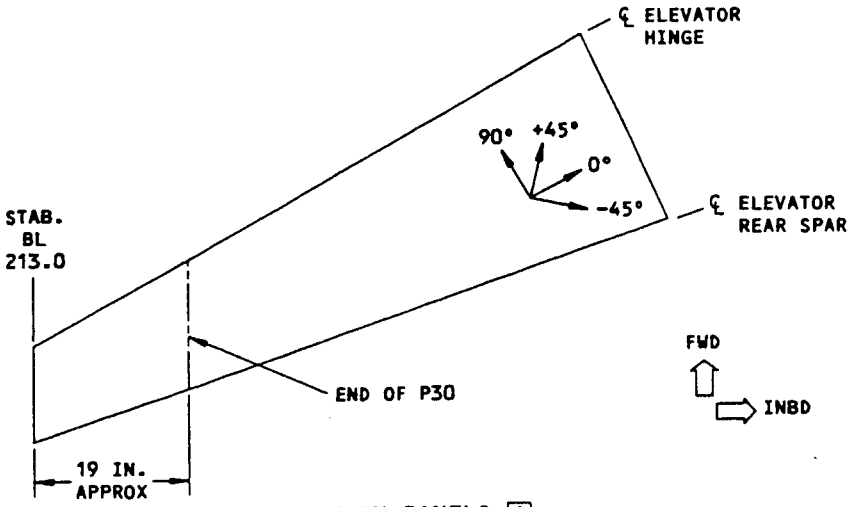


VIEW ON PANELS [A]

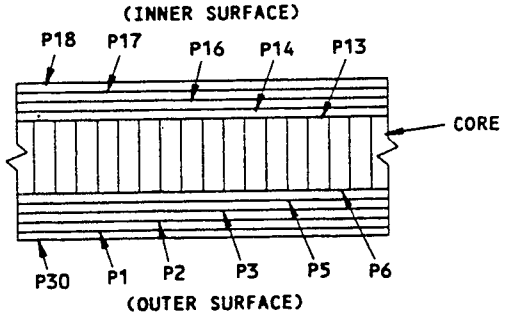


SECTION THRU HONEYCOMB PANEL

| ITEM NO. | PLY NO. | MATERIAL | PLY ORIENTATION |
|---|---|---|---|
| 1 | P1,P18 | [C] | +45° |
| | P2,P17 | [C] | 0° |
| | P3,P16 | [C] | -45° |
| | P5,P14 | [G] | 0° OR 90° |
| | P6,P13 | [G] | ±45° |
| | P30 | [H] | OPTIONAL |

PLY TABLE [B]

DETAIL IV

Elevator Skin Identification (Graphite Composite Elevator)
Figure 3 (Sheet 5)

186659

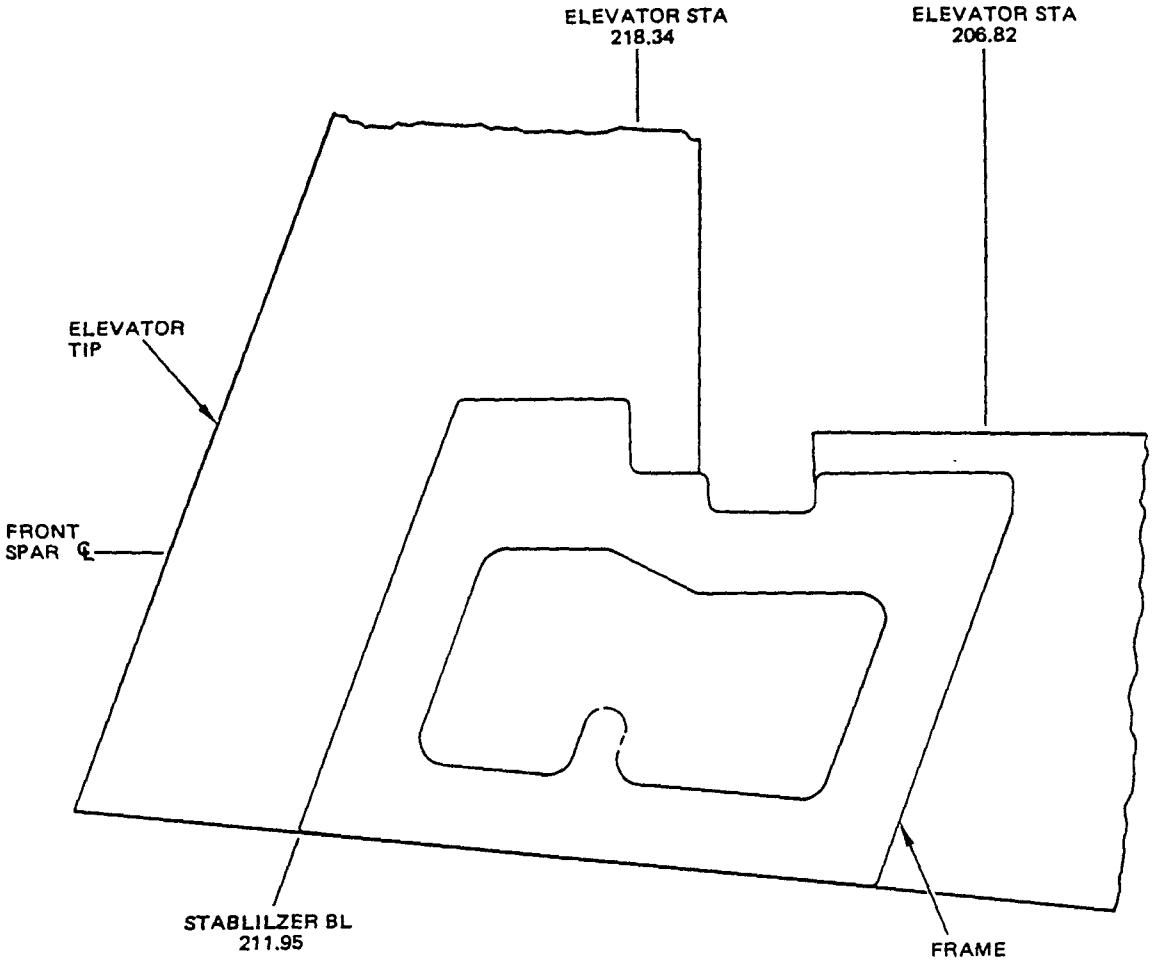


LIGHTNING STRIKE PROTECTION FRAME
DETAIL V [L]

Elevator Skin Identification (Graphite Composite Elevator)
Figure 3 (Sheet 6)

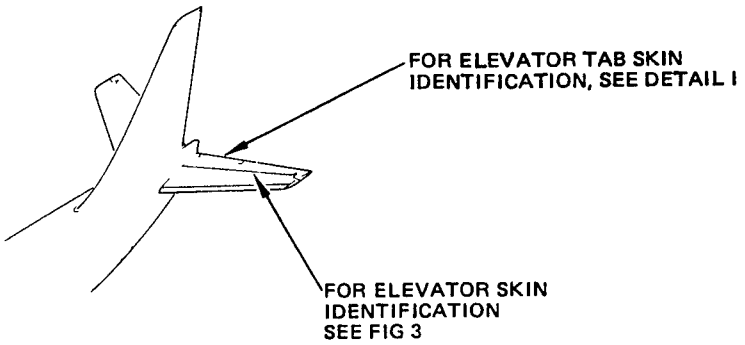


NOTES

- THIS FIGURE APPLIES TO 737-200 AIRPLANES WITH GRAPHITE COMPOSITE ELEVATOR TAB SKINS, CUM LINE NUMBERS:
  999, 1003, 1012, 1013, 1018, 1020, 1021, 1023 THRU 1027, 1029 THRU 1032, 1034, 1035 1036, 1039, 1040, 1041, 1042, 1044, 1045, 1046, 1047, 1049, 1051, 1053, 1055, 1056, 1058, 1059, 1060, 1061, 1062, 1064, 1065, 1066, 1067, 1068, 1069, 1072, 1074, 1075, 1077, 1078, 1079, 1081, 1082, 1084, 1085, 1086, 1089, 1091, 1093, 1095, 1097, 1102, 1105, 1109, 1113, 1117, 1120, 1186, 1189, 1194, 1197, 1199, 1203, 1241, 1245, 1256, 1257, 1261, 1262, 1265, 1266, 1267, 1299, 1313, 1319, 1329, 1342, 1347, 1361, 1369, 1371, 1379, 1387, 1392, 1397, 1399, 1401, 1403, 1405, 1414, 1415, 1418, 1420, 1422, 1424, 1426, 1453, 1456, 1486, 1576, 1587 (BOEING REF: PZ447, P4348 THRU P4399, P4801 THRU P5499, P8979 THRU P9995)

[A] PLY ORIENTATION CONVENTION: THE PLY ORIENTATION OF EACH PLY IS DESIGNATED BY A NUMBER (IN DEGREES) REPRESENTING THE ORIENTATION OF THE AXIS PARALLEL TO THE DIRECTION OF FILAMENTS (IN TAPE) OR LONGITUDINALLY ORIENTED YARN (IN A WOVEN FABRIC) WITH RESPECT TO A REFERENCE AXIS. 0 DEGREES IS THE REFERENCE AXIS. THE DIRECTION OF LONGITUDINAL YARN IN A WOVEN FABRIC IS CALLED THE WARP DIRECTION

[B] MATERIAL AND PLY ORIENTATION ARE ALWAYS SHOWN FOR FIELD AREAS. SEE BOEING DRAWINGS FOR EDGE BANDS AND AREAS WITH DOUBLERS WHENEVER THEY ARE NOT SHOWN IN THE MANUAL AS ADJUNCTS TO FIELD AREAS

[C] PREPREG GRAPHITE TAPE PER BMS 8-212, TYPE II, CLASS III, GRADE 95

[D] PREPREG GRAPHITE TAPE PER BMS 8-212, TYPE II, CLASS I, GRADE 190

[E] CORE RIBBON DIRECTION

Elevator Tab Skin Identification
(Graphite Composite Elevator)
Figure 4 (Sheet 1)

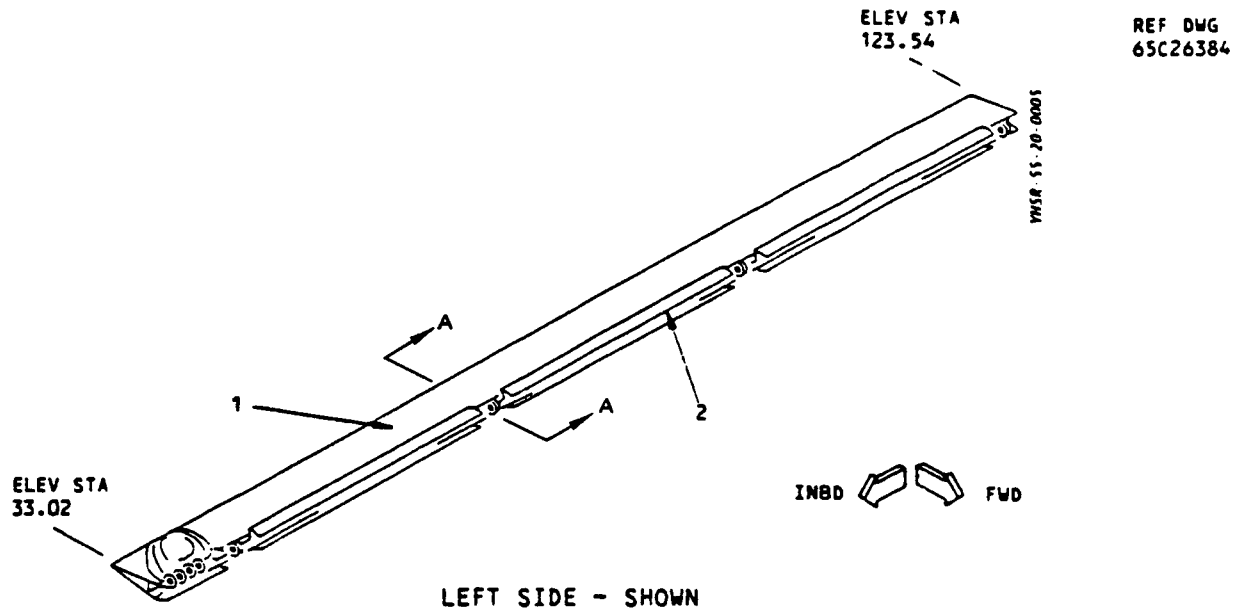


LEFT SIDE - SHOWN
RIGHT SIDE - OPPOSITE
DETAIL I.

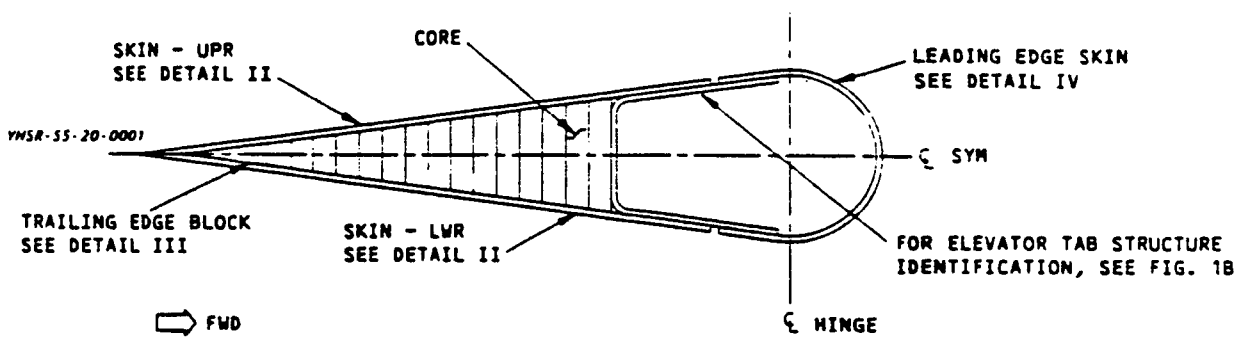


SECTION A-A

| ITEM | DESCRIPTION | GAGE | MATERIAL | EFFECTIVITY |
|---|---|---|---|---|
| 1 | ELEVATOR TAB BOND ASSY - UPPER, LOWER | | GRAPHITE/EPOXY/HONEYCOMB SANDWICH | |
| | SKIN | | SEE DETAIL II | |
| | CORE | | NONMETALLIC HONEYCOMB CORE PER BMS 8-124, CLASS IV, TYPE V, GRADE 3.0 | |
| | TE BLOCK | | SEE DETAIL III | |
| 2 | LE SKIN | | GRAPHITE/EPOXY LAMINATE - SEE DETAIL IV | |

LIST OF MATERIALS FOR DETAIL I

Elevator Tab Skin Identification (Graphite Composite Elevator)
Figure 4 (Sheet 2)

114591

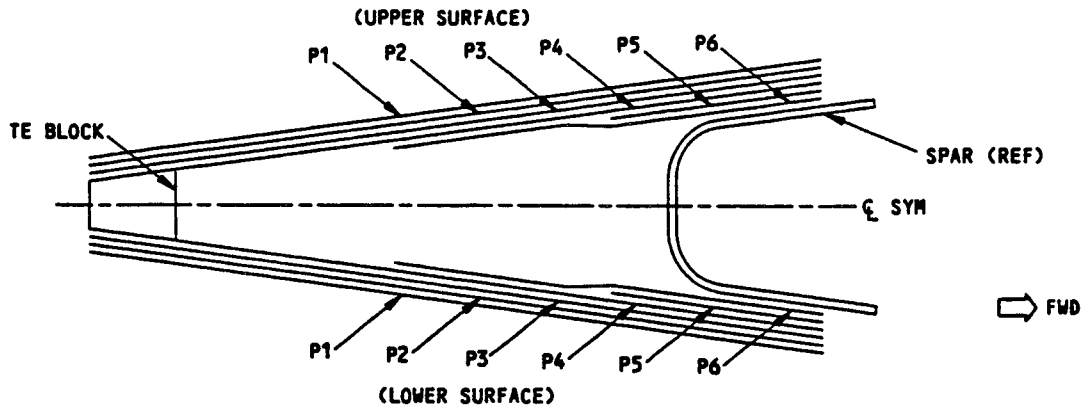


TYPICAL SECTION THRU ELEVATOR TAB

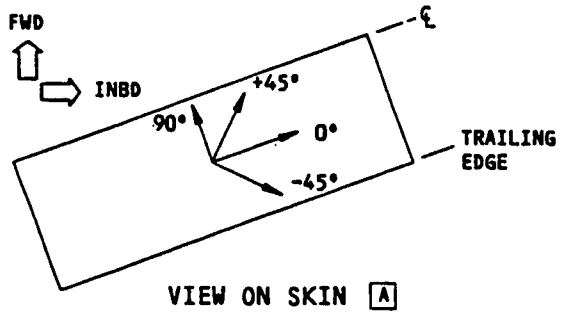


VIEW ON SKIN [A]

| ITEM | PLY NO. | MATERIAL | PLY ORIENTATION |
|---|---|---|---|
| 1 | P1,P6 | [C] | 0° |
| | P2,P5 | | 90° |
| | P3 | | +45° |
| | P4 | | -45° |

PLY TABLE FOR SKIN - UPR, LWR [B]

DETAIL II

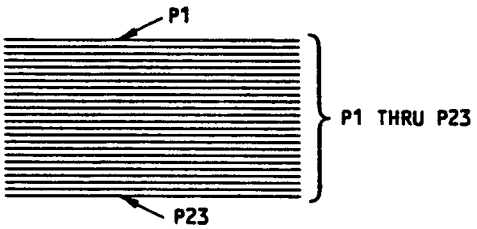


SECTION THRU TE BLOCK

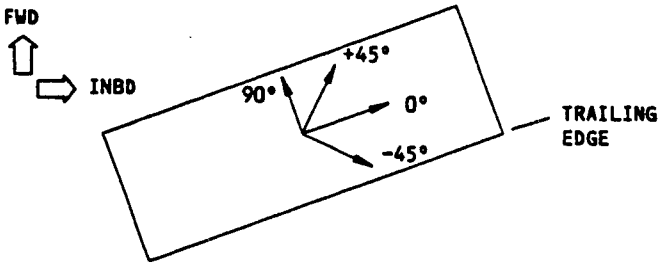


VIEW ON TE BLOCK [A]

| ITEM | PLY NO. | MATERIAL | PLY ORIENTATION |
|---|---|---|---|
| 1 | P1 THRU P23 (ODD PLIES) | [D] | +45° |
| | P2 THRU P22 (EVEN PLIES) | | -45° |

PLY TABLE FOR TE BLOCK [B]

DETAIL III

Elevator Tab Skin Identification (Graphite Composite Elevator)
Figure 4 (Sheet 3)

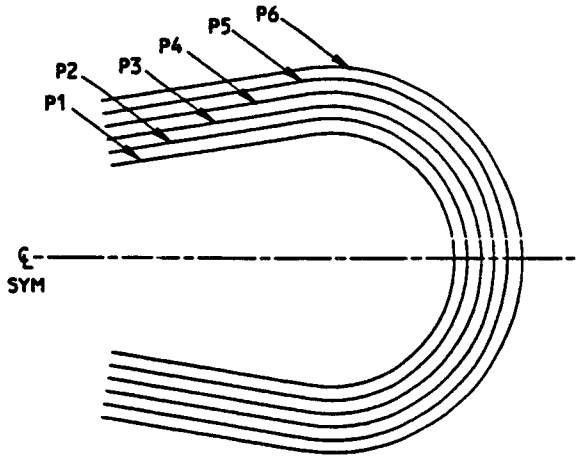


SECTION THRU ELEVATOR TAB LEADING EDGE

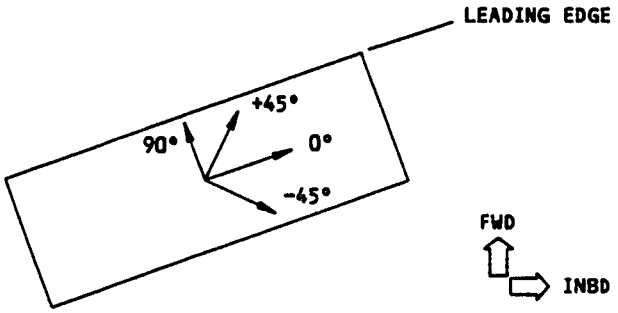


VIEW ON PANELS [A]

| ITEM | PLY NO. | MATERIAL | PLY ORIENTATION |
|---|---|---|---|
| 2 | P1,P6<br>P2,P5<br>P3,P4 | [D] | 90°<br>+45°<br>-45° |

PLY TABLE FOR ELEVATOR TAB LEADING EDGE [B]

DETAIL IV

Elevator Tab Skin Identification (Graphite Composite Elevator)
Figure 4 (Sheet 4)

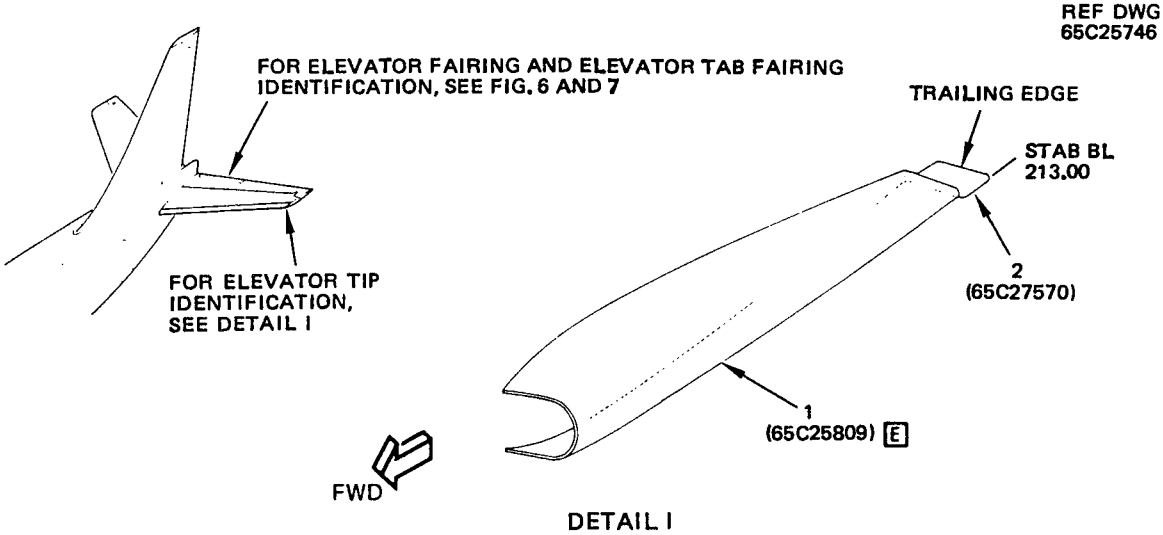


| ITEM | DESCRIPTION | GAGE | MATERIAL | EFFECTIVITY |
|---|---|---|---|---|
| 1 | TIP FAIRING - OUTBD SKIN | | GLASS/ARAMID/EPOXY LAMINATE SEE DETAIL II | |
| 2 | TIP FITTING | 1.000 | 7075-T7351 | |

NOTES

THIS FIGURE APPLIES TO 737-200 AIRPLANES WITH GRAPHITE COMPOSITE ELEVATORS, CUM LINE NUMBERS:
999, 1003, 1012, 1013, 1018, 1020, 1021, 1023 THRU 1027, 1029 THRU 1032, 1034, 1035 1036, 1039, 1040, 1041, 1042, 1044, 1045, 1046, 1047, 1049, 1051, 1053, 1055, 1056, 1058, 1059, 1060, 1061, 1062, 1064, 1065, 1066, 1067, 1068, 1069, 1072, 1074, 1075, 1077, 1078, 1079, 1081, 1082, 1084, 1085, 1086, 1089, 1091, 1093, 1095, 1097, 1102, 1105, 1109, 1113, 1117, 1120, 1186, 1189, 1194, 1197, 1199, 1203, 1241, 1245, 1256, 1257, 1261, 1262, 1265, 1266, 1267, 1299, 1313, 1319, 1329, 1342, 1347, 1361, 1369, 1371, 1379, 1387, 1392, 1397, 1399, 1401, 1403, 1405, 1414, 1415, 1418, 1420, 1422, 1424, 1426, 1453, 1456, 1486, 1576, 1587 (BOEING REF: PZ447, P4348 THRU P4399, P4801 THRU P5499, P8979 THRU P9995)

A PLY ORIENTATION CONVENTION: THE PLY ORIENTATION OF EACH PLY IS DESIGNATED BY A NUMBER (IN DEGREES) REPRESENTING THE ORIENTATION OF THE AXIS PARALLEL TO THE DIRECTION OF FILAMENTS (IN TAPE) OR LONGITUDINALLY ORIENTED YARN (IN A WOVEN FABRIC) WITH RESPECT TO A REFERENCE AXIS. 0 DEGREES IS THE REFERENCE AXIS. THE DIRECTION OF LONGITUDINAL YARN IN A WOVEN FABRIC IS CALLED THE WARP DIRECTION

Elevator Tip Identification
(Graphite Composite Elevator)
Figure 5 (Sheet 1)

[B] MATERIAL AND PLY ORIENTATION ARE ALWAYS SHOWN ON FIELD AREAS, SEE BOEING DRAWINGS FOR EDGE BANDS AND AREAS WITH DOUBLERS WHENEVER THEY ARE NOT SHOWN IN THE MANUAL AS ADJUNCTS TO FIELD AREAS

[C] PREPREG GRAPHITE TAPE PER BMS 8-79, STYLE 120

[D] PREPREG ARAMID FABRIC PER BMS 8-219, STYLE 285

[E] ALUMINUM FLAME SPRAY AREA - SEE BOEING DRAWINGS FOR COATING THICKNESS

[F] ALUMINUM COATED PREPREG GLASS FABRIC PER BMS 8-278, TYPE 1, CLASS 250

Elevator Tip Identification (Graphite Composite Elevator)
Figure 5 (Sheet 2)

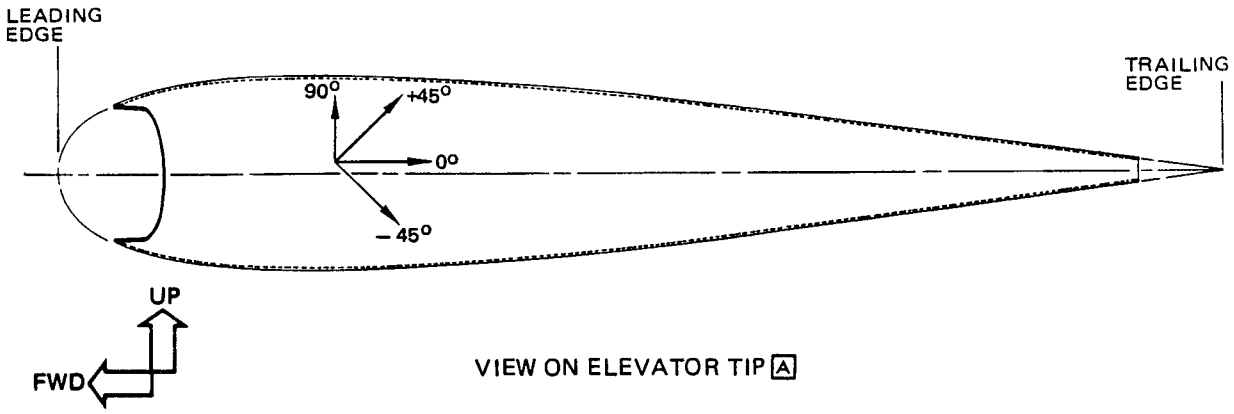


VIEW ON ELEVATOR TIP [A]

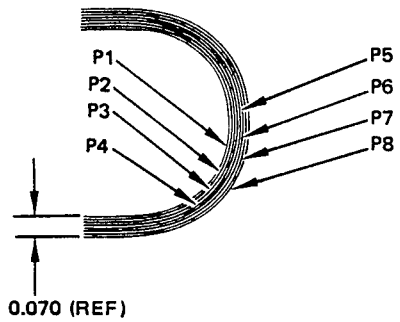


SECTION THRU ELEVATOR TIP

| ITEM | PLY NO. | MATERIAL | PLY ORIENTATION [A] |
|---|---|---|---|
| 1 | P1 | [C] | 0° OR 90° |
| | P2, P4, P5, P7 | [D] | ± 45° |
| | P3, P6 | | 0° OR 90° |
| | P8 | [C] [F] (OPTIONAL) | 0° OR 90° |

PLY TABLE FOR ELEVATOR TIP [B]

DETAIL II

Elevator Tip Identification
(Graphite Composite Elevator)
Figure 5 (Sheet 3)

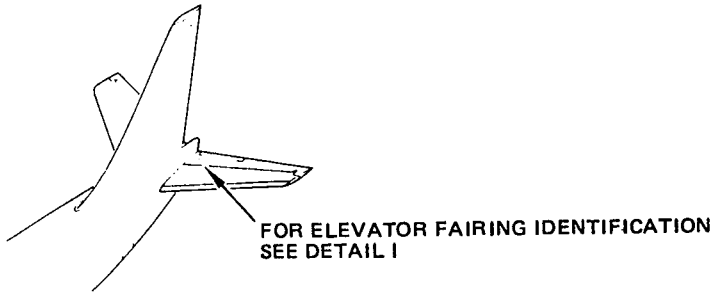


NOTES

- THIS FIGURE APPLIES TO ELEVATOR FAIRINGS ON GRAPHITE COMPOSITE ELEVATORS ON 737-200 AIRPLANES

CUM LINE NUMBERS:
999, 1003, 1012, 1013, 1018, 1020, 1021, 1023 THRU 1027, 1029 THRU 1032, 1034, 1035, 1036, 1040, 1041, 1042, 1044, 1045, 1046, 1047, 1049, 1051, 1053, 1055, 1056, 1058, 1059, 1060, 1061, 1062, 1064, 1065, 1066, 1067, 1068, 1069, 1072, 1074, 1075, 1077, 1078, 1079, 1081, 1082, 1084, 1085, 1086, 1089, 1091, 1093, 1095, 1097, 1102, 1105, 1109, 1113, 1117, 1120, 1186, 1189, 1194, 1197, 1199, 1203, 1241, 1245, 1256, 1257, 1261, 1262, 1265, 1266, 1267, 1299, 1313, 1319, 1329, 1342, 1347, 1361, 1369, 1371, 1379, 1387, 1392, 1397, 1399, 1401, 1403, 1405, 1414, 1415, 1418, 1420, 1422, 1424, 1426, 1453, 1456, 1576, 1587 (BOEING REF: PZ447, P4349 THRU P4399, P4801 THRU P5499, P8979 THRU P9945)

A PLY ORIENTATION CONVENTION: THE PLY ORIENTATION OF EACH PLY IS DESIGNATED BY A NUMBER (IN DEGREES) REPRESENTING THE ORIENTATION OF THE AXIS PARALLEL TO THE DIRECTION OF FILAMENTS (IN TAPE) OR LONGITUDINALLY ORIENTED YARN (IN A WOVEN FABRIC) WITH RESPECT TO A REFERENCE AXIS. 0 DEGREES IS THE REFERENCE AXIS. THE DIRECTION OF LONGITUDINAL YARN IN A WOVEN FABRIC IS CALLED THE WARP DIRECTION

B MATERIAL AND PLY ORIENTATION ARE ALWAYS SHOWN FOR FIELD AREAS, SEE BOEING DRAWINGS FOR EDGE BANDS AND AREAS WITH DOUBLERS WHENEVER THEY ARE NOT SHOWN IN THE MANUAL AS ADJUNCTS TO FIELD AREAS

C PREPREG GRAPHITE FABRIC PER BMS 8-212, TYPE IV, CLASS II, STYLE 3K-70-PW

D WARP DIRECTION OPTIONAL

E PREPREG ARAMID FABRIC PER BMS 8-219, STYLE 285

F PREPREG GLASS FABRIC PER BMS 8-79, TYPE 120

Elevator Fairing Identification (Graphite Composite Elevator)
Figure 6 (Sheet 1)

G PREPREG ARAMID FABRIC PER BMS 8-219, STYLE 120 OR 285

H PREPREG GRAPHITE FABRIC PER BMS 8-168, TYPE II, CLASS II, STYLE 3K-70-PW

I FOR CUM LINE NUMBERS:
1034, 1036, 1040 THRU 1042, 1044 THRU 1047, 1049, 1050, 1051, 1053, 1055, 1056, 1058, 1059, 1060, 1061, 1062, 1064, 1065, 1066, 1067, 1068, 1069, 1072, 1074, 1075, 1077, 1078, 1079, 1081, 1082, 1084, 1085, 1086, 1089, 1091, 1093, 1095, 1097, 1102, 1105, 1109, 1113, 1117, 1120, 1186, 1189, 1194, 1197, 1199, 1203, 1241, 1249, 1256, 1257, 1261, 1262, 1265, 1266, 1267, 1299, 1313, 1319, 1329, 1342, 1347, 1361, 1369, 1371, 1379, 1387, 1392, 1397, 1399, 1401, 1403, 1405, 1414, 1415, 1418, 1420, 1422, 1424, 1426, 1453, 1456, 1486, 1576, 1587
(BOEING REF: P4348 THRU P4399, P4801 THRU P5499, P8979 THRU P9995)

J FOR CUM LINE NUMBERS:
999, 1003, 1012, 1016, 1017, 1019 THRU 1021, 1023 THRU 1029, 1031 THRU 1033, 1035, 1038, 1039
(BOEING REF: PZ447)

Elevator Fairing Identification
(Graphite Composite Elevator)
Figure 6 (Sheet 1A)

REF DWG
65C25746

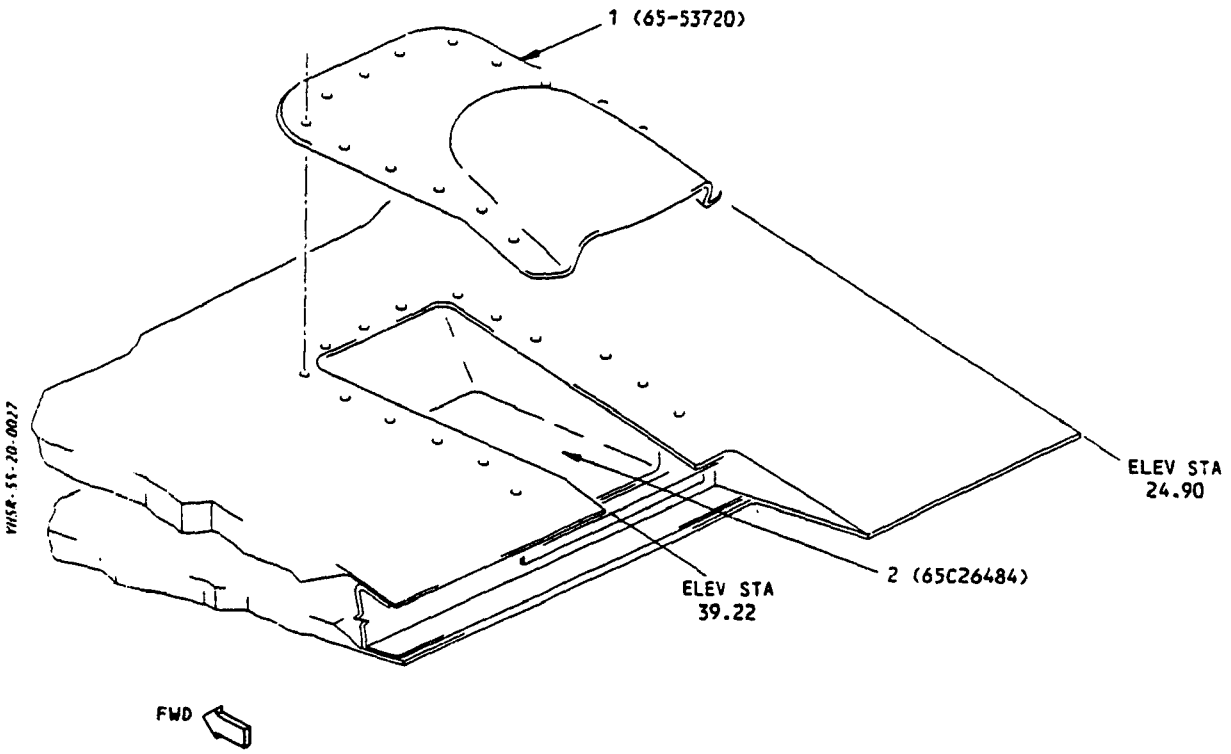


DETAIL I

| ITEM | DESCRIPTION | GAGE | MATERIAL | EFFECTIVITY |
|---|---|---|---|---|
| 1 | MAST FITTING FAIRING SKIN | | GLASS/EPOXY LAMINATE<br>PREPREG GLASS FABRIC PER BMS 8-79, CLASS I, TYPE I OR II [D]<br>ARAMID/GLASS/EPOXY LAMINATE<br>SEE DETAIL II | <br>[J]<br><br>[I] |
| 2 | INNER TAB ROD FAIRING SKIN | | GRAPHITE/EPOXY LAMINATE<br>SEE DETAILS III AND IV | [I] [J] |

LIST OF MATERIALS FOR DETAIL I

Elevator Fairing Identification (Graphite Composite Elevator)
Figure 6 (Sheet 2)

114593

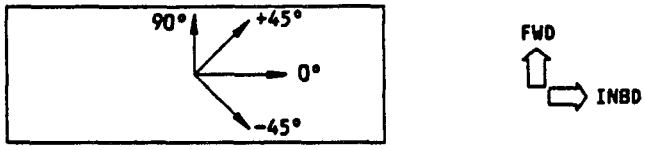


VIEW LOOKING DOWN ON FAIRING [A]

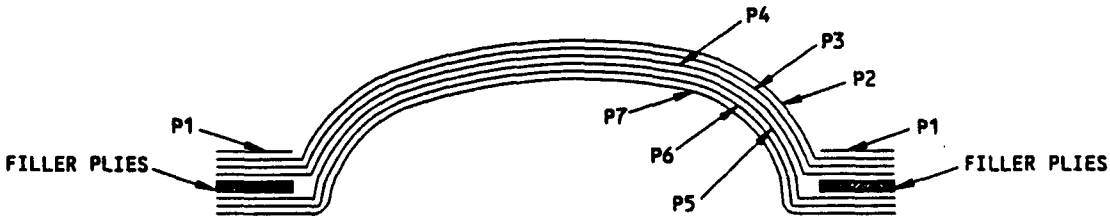


SECTION THRU ELEVATOR MAST FITTING FAIRING

| ITEM | PLY NO. | MATERIAL | PLY ORIENTATION | EFFECTIVITY |
|---|---|---|---|---|
| 1 | P1 | [F] | [D] | [I] |
| | P2 THRU P7 | [E] | [D] | |
| | FILLER PLIES | [G] | [D] | |

PLY TABLE FOR ELEVATOR MAST FITTING FAIRING [B]

DETAIL II

Elevator Fairing Identification (Graphite Composite Elevator)
Figure 6 (Sheet 3)

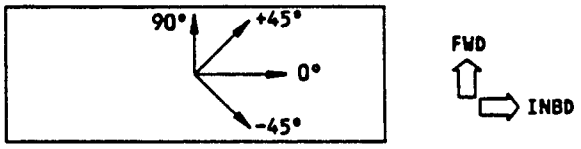


VIEW LOOKING DOWN ON FAIRING [A]

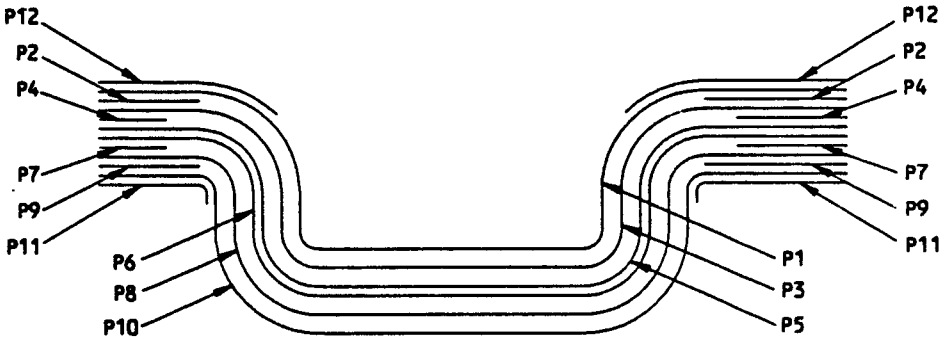


SECTION THRU ELEVATOR INNER TAB ROD FAIRING [I]

| ITEM | PLY NO. | MATERIAL | PLY ORIENTATION | EFFECTIVITY |
|---|---|---|---|---|
| 2 | P1,P5,P6,P10 | [E] | ± 45° | [I] |
| | P3,P8 | [E] | 0° OR 90° | |
| | P2,P9 | [H] | ± 45° | |
| | P4,P7 | [H] | 0° OR 90° | |
| | P11,P12 | [F] | 0° OR 90° | |

PLY TABLE FOR INNER TAB ROD FAIRING [B]

DETAIL IV

Elevator Fairing Identification (Graphite Composite Elevator)
Figure 6 (Sheet 4)

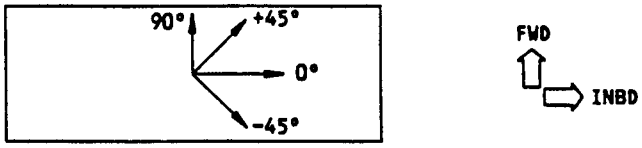


VIEW LOOKING DOWN ON FAIRING [A]

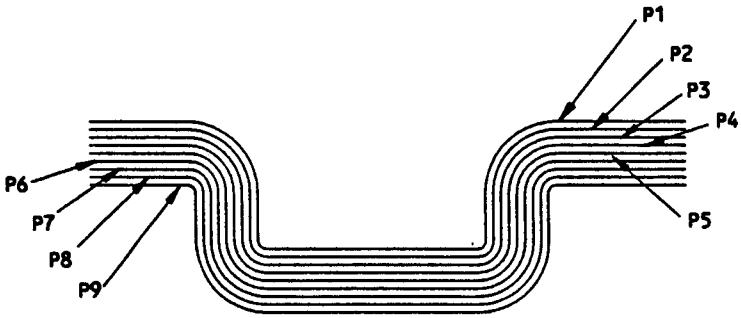


SECTION THRU ELEVATOR INNER TAB ROD FAIRING [J]

| ITEM | PLY NO. | MATERIAL | PLY ORIENTATION | EFFECTIVITY |
|---|---|---|---|---|
| 2 | P1,P3,P5,P7, P9 | [C] | ± 45° | [J] |
| | P2,P4,P6,P8 | | 0° OR 90° | |

PLY TABLE FOR INNER TAB ROD FAIRING [B]

DETAIL IV

Elevator Fairing Identification (Graphite Composite Elevator)
Figure 6 (Sheet 5)

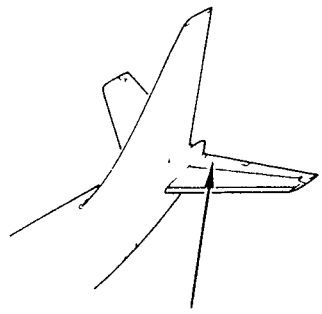


NOTES

- THIS FIGURE APPLIES TO ELEVATOR TAB FAIRINGS ON GRAPHITE COMPOSITE ELEVATORS ON 737-200 AIRPLANES WITH CUM LINE NUMBERS LISTED IN NOTE C AND D

A ALUMINUM FLAME SPRAY AREA - SEE BOEING DRAWINGS FOR COATING THICKNESS

B WARP DIRECTION OPTIONAL

C FOR CUM LINE NUMBERS: 999, 1003, 1012, 1013, 1016, 1017, 1018 THRU 1021, 1023 THRU 1029, 1031 THRU 1033, 1035, 1038, 1039 (BOEING REF: PZ447)

D FOR CUM LINE NUMBERS: 1034, 1036, 1040 THRU 1042, 1044 THRU 1047, 1049, 1050, 1051 THRU 1120, 1186, 1189, 1194, 1197, 1199, 1203, 1241, 1245, 1256, 1257, 1261, 1262, 1265, 1266, 1267, 1299, 1313, 1319, 1329, 1342, 1347, 1361, 1369, 1371, 1379, 1387, 1392, 1397, 1399, 1401, 1403, 1405, 1414, 1415, 1418, 1420, 1422, 1424, 1426, 1453, 1486 (BOEING REF: P4341 THRU P4399, P4801 THRU P5499, P8979 THRU P9995)

E PREPREG ARAMID FABRIC PER BMS 8-219, STYLE 285

F PREPREG GLASS FABRIC PER BMS 8-79, TYPE 120

G PREPREG ARAMID FABRIC PER BMS 8-219, STYLE 120 OR 285

H MATERIAL AND PLY ORIENTATION ARE ALWAYS SHOWN FOR FIELD AREAS, SEE BOEING DRAWINGS FOR EDGE BANDS AND AREAS WITH DOUBLERS WHENEVER THEY ARE NOT SHOWN IN THE MANUAL AS ADJUNCTS TO FIELD AREAS

I PLY ORIENTATION CONVENTION: THE PLY ORIENTATION OF EACH PLY IS DESIGNATED BY A NUMBER (IN DEGREES) REPRESENTING THE ORIENTATION OF THE AXIS PARALLEL TO THE DIRECTION OF FILAMENTS (IN TAPE) OR LONGITUDINALLY ORIENTED YARN (IN A WOVEN FABRIC) WITH RESPECT TO A REFERENCE AXIS. 0 DEGREES IS THE REFERENCE AXIS. THE DIRECTION OF LONGITUDINAL YARN IN A WOVEN FABRIC IS CALLED THE WARP DIRECTION

Elevator Tab Fairing Identification
(Graphite Composite Elevator)
Figure 7 (Sheet 1)

REF DWG
65C26384

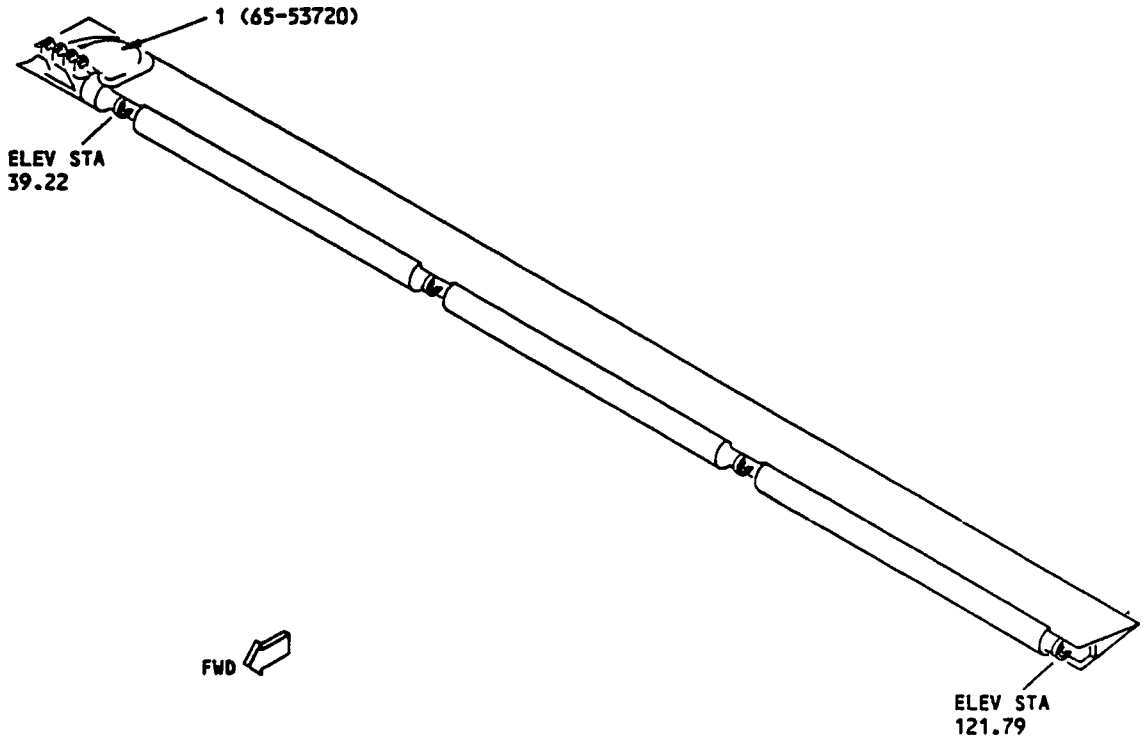


DETAIL I

| ITEM | DESCRIPTION | GAGE | MATERIAL | EFFECTIVITY |
|---|---|---|---|---|
| 1 | MAST FITTING FAIRING SKIN [A] | | GLASS/EPOXY LAMINATE PREPREG GLASS FABRIC PER BMS 8-79, CLASS I, TYPE I OR II [B] | [C] |

LIST OF MATERIALS FOR DETAIL I

Elevator Tab Fairing Identification (Graphite Composite Elevator)
Figure 7 (Sheet 2)

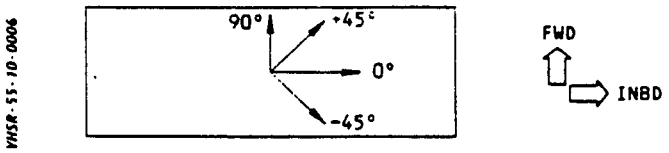


VIEW LOOKING DOWN ON FAIRING [I]

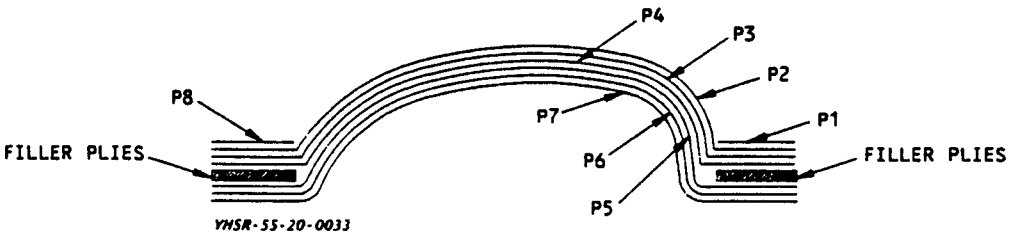


SECTION THRU ELEVATOR TAB MAST FITTING FAIRING

| ITEM | PLY NO. | MATERIAL | PLY ORIENTATION | EFFECTIVITY |
|---|---|---|---|---|
| 1 | P1,P8 | [F] | [B] | [D] |
| | P2 THRU P7 | [E] | [B] | |
| | FILLER PLIES | [G] | [B] | |

PLY TABLE FOR ELEVATOR TAB MAST FITTING FAIRING [H]

DETAIL II

Elevator Tab Fairing Identification (Graphite Composite Elevator)
Figure 7 (Sheet 3)

114798

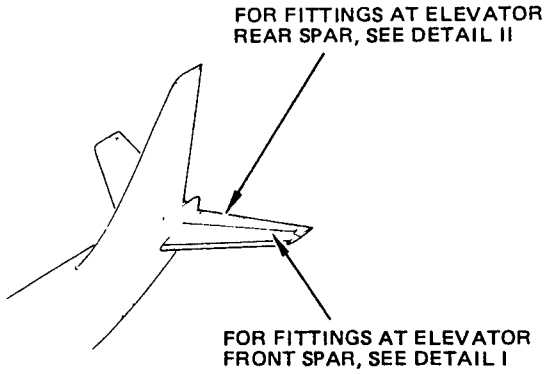


NOTE

- THIS FIGURE APPLIES TO ELEVATOR FITTINGS ON GRAPHITE COMPOSITE ELEVATORS ON 737-200 AIRPLANES, CUM LINE NUMBERS:
  999, 1003, 1012, 1013, 1018, 1020, 1021, 1023 THRU 1027, 1029 THRU 1032, 1034, 1035, 1039, 1041, 1044, 1045, 1047, 1049, 1050, 1051 THRU 1120, 1186, 1189, 1194, 1197, 1199, 1203, 1241, 1245, 1256, 1257, 1261, 1262, 1265, 1266, 1267, 1299, 1313, 1319, 1329, 1342, 1347, 1361, 1369, 1371, 1379, 1387, 1392, 1397, 1399, 1401, 1403, 1405, 1414, 1415, 1418, 1420, 1422, 1424, 1426, 1453, 1456, 1486 (BOEING REF: PZ447, P4341 THRU P4399, P4801 THRU P5499, P8979 THRU P9995)

Elevator Fitting Identification
(Graphite Composite Elevator)
Figure 8 (Sheet 1)

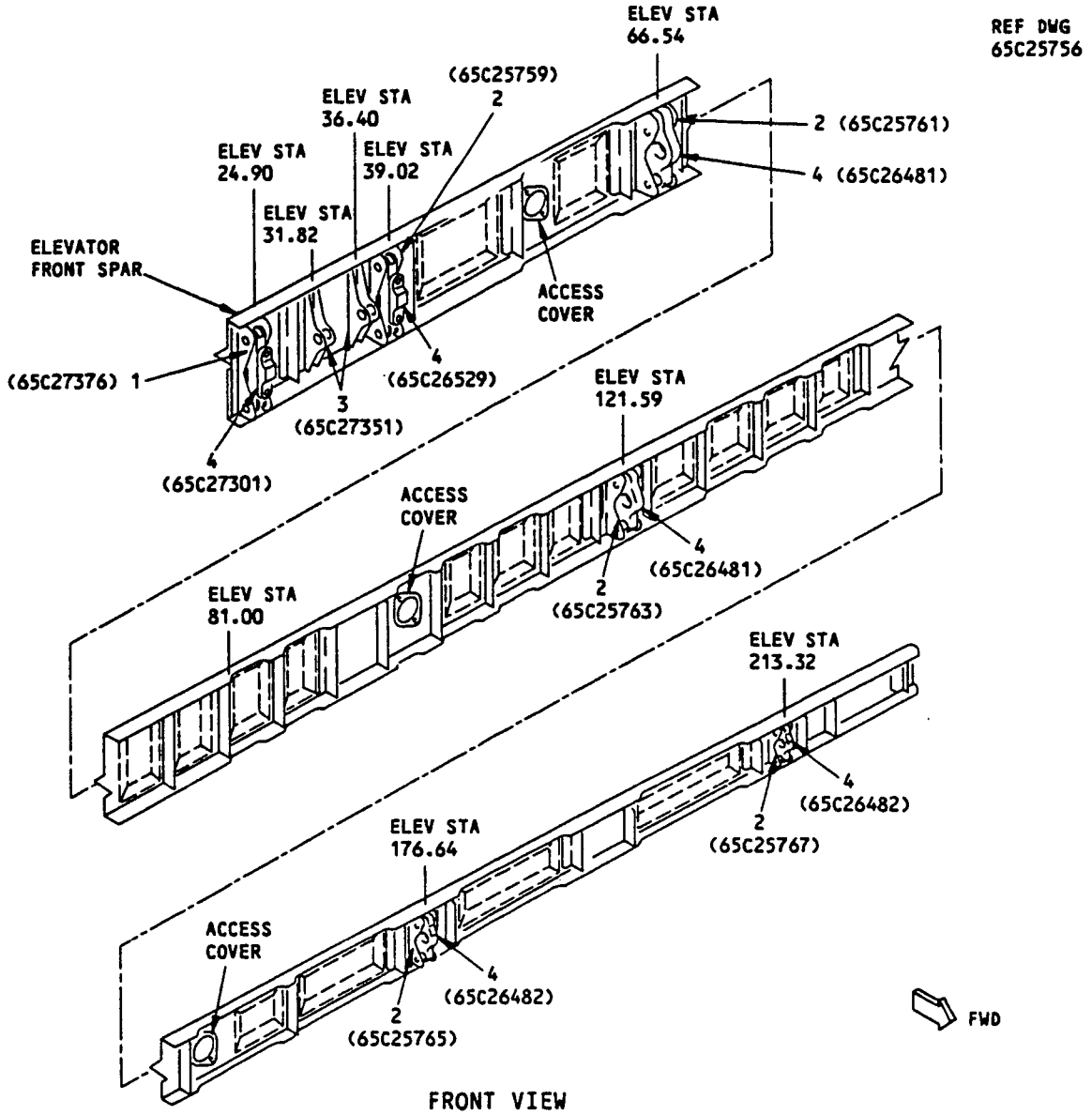


FRONT VIEW
FRONT SPAR

DETAIL I

| ITEM | DESCRIPTION | GAGE | MATERIAL | EFFECTIVITY |
|---|---|---|---|---|
| 1 | MAST ARM FITTING | | FORGING 7075-T73 | |
| 2 | HINGE FITTINGG | | FORGING 7075-T73 | |
| 3 | BRACKET ASSY<br>ANGLE<br>ANGLE | | <br>BAC1503-100135 2024-T3511<br>BAC1503-100374 2024-T3511 | |
| 4 | BEARING PLATE | | 7075-T7351 | |

LIST OF MATERIALS FOR DETAIL I
Elevator Fitting Identification (Graphite Composite Elevator)
Figure 8 (Sheet 2)

REF DWG
65C25771
65C25773

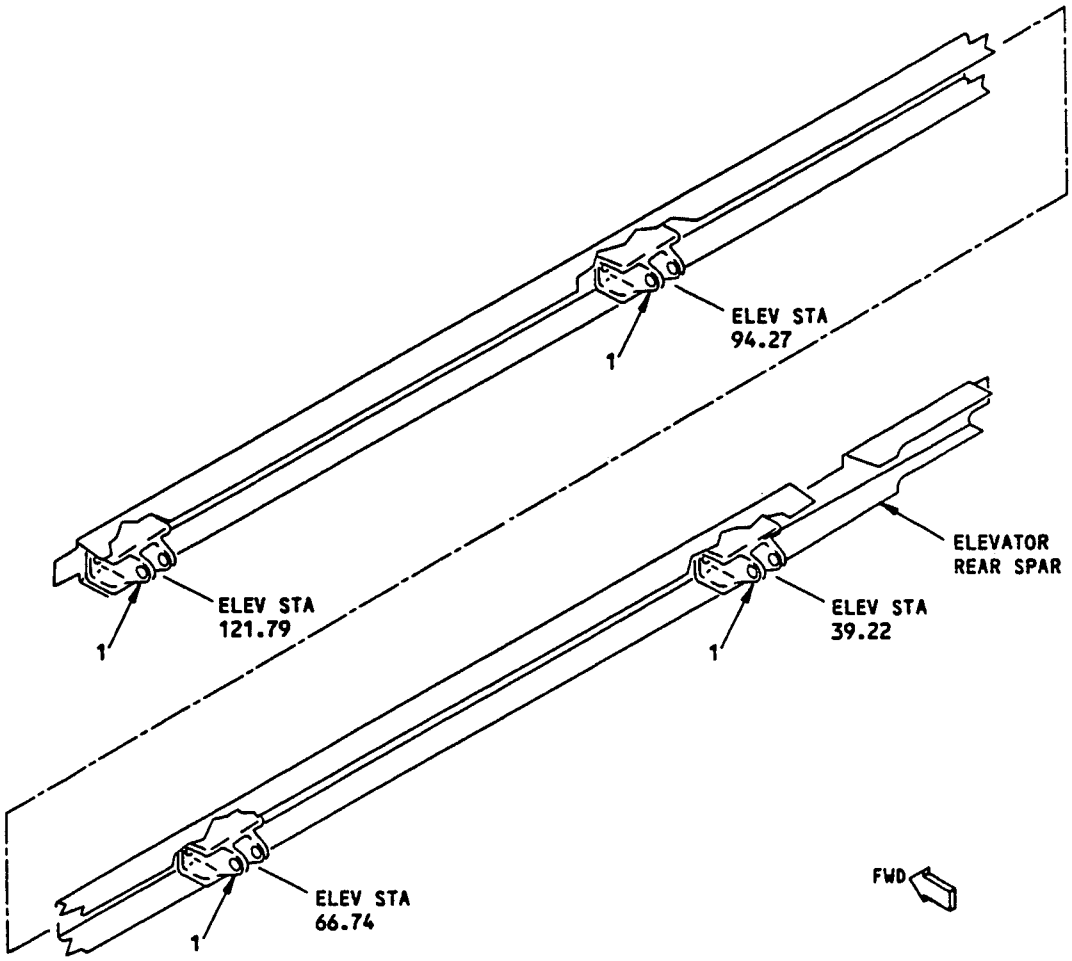


REAR VIEW
REAR SPAR

DETAIL II

| ITEM | DESCRIPTION | GAGE | MATERIAL | EFFECTIVITY |
|---|---|---|---|---|
| 1 | HINGE FITTING | | FORGING 7075-T73 | |

LIST OF MATERIALS FOR DETAIL II

Elevator Fitting Identification (Graphite Composite Elevator)
Figure 8 (Sheet 3)

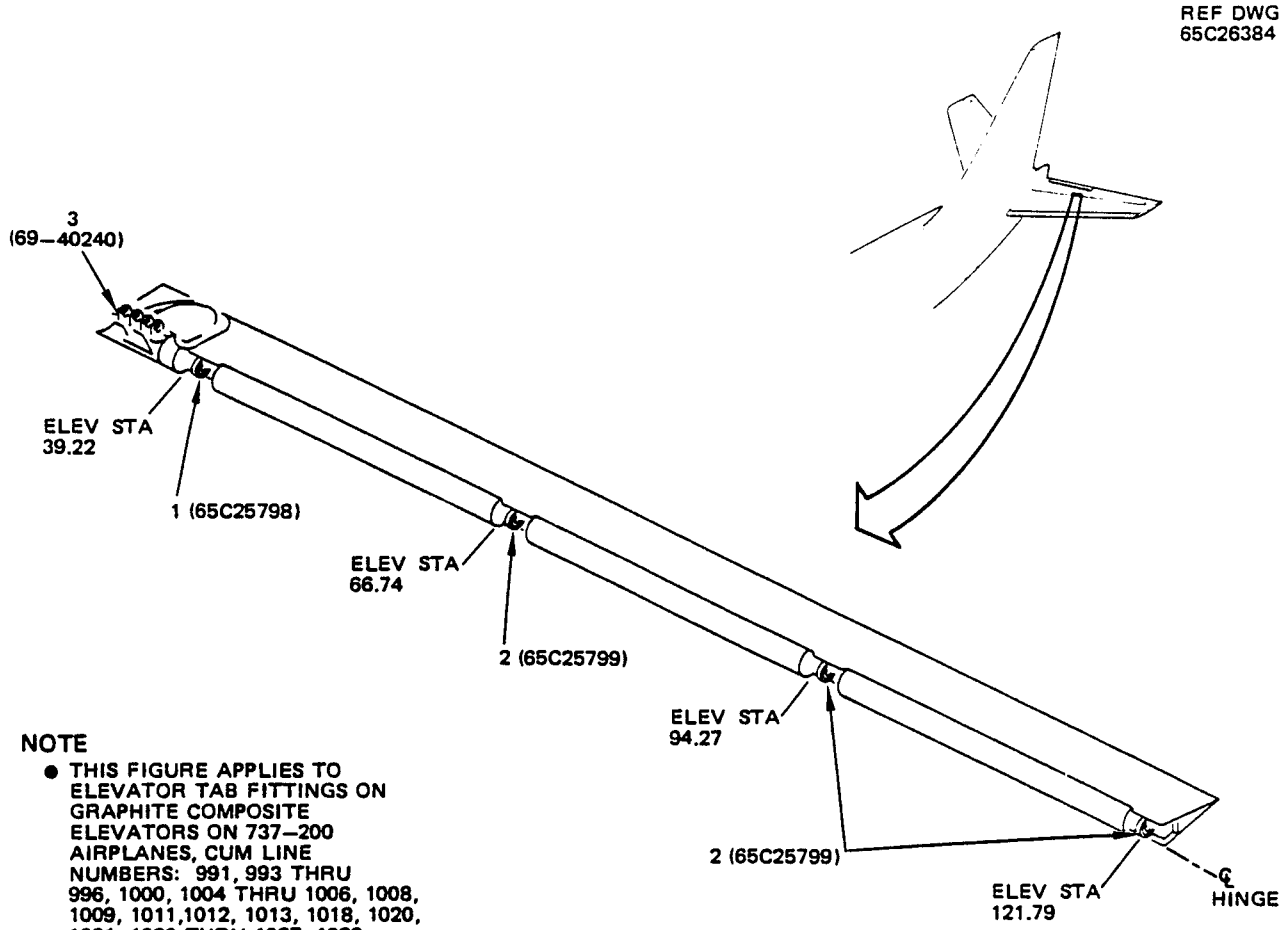


NOTE

- THIS FIGURE APPLIES TO ELEVATOR TAB FITTINGS ON GRAPHITE COMPOSITE ELEVATORS ON 737–200 AIRPLANES, CUM LINE NUMBERS: 991, 993 THRU 996, 1000, 1004 THRU 1006, 1008, 1009, 1011,1012, 1013, 1018, 1020, 1021, 1023 THRU 1027, 1029 THRU 1032, 1034, 1035 (BOEING REF: PZ447, P4246 THRU P4399, P4801 THRU P5499, P8972 THRU P9995)

DETAIL I

| ITEM | DESCRIPTION | GAGE | MATERIAL | EFFECTIVITY |
|---|---|---|---|---|
| 1 | HINGE FITTING | | FORGING – 7075–T73 | |
| 2 | HINGE FITTING | | FORGING – 7075–T73 | |
| 3 | MAST FITTING | 1.75 | 2024–T351 BAR HT TR TO T851 (OPTIONAL: 2024–T851 BAR) | |

LIST OF MATERIALS FOR DETAIL I

Elevator Tab Fitting Identification
(Graphite Composite Elevator)
Figure 9

# ELEVATOR SKIN REPAIR

1. General

   A. Refer to 51-40-9 for glass fabric reinforced epoxy and phenolic laminates repairs to Fiberglass/Metal Elevators.

   B. Refer to 55-20-3, Figures 1 and 2 for repairs to Graphite Composite Elevators.

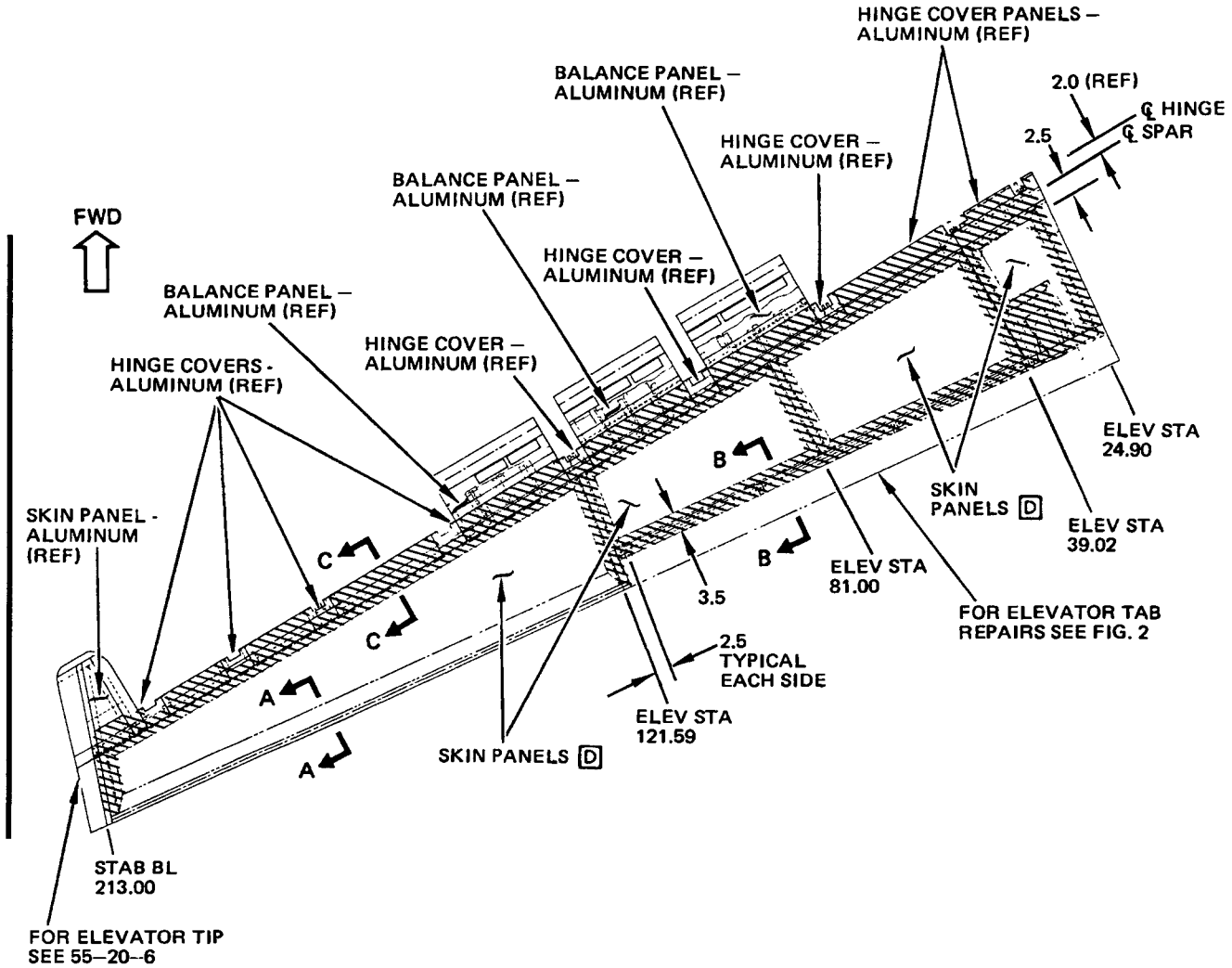


CRITICAL AREAS (SHADED)
CONTACT THE BOEING COMPANY
FOR REPAIR INFORMATION

UPPER SURFACE SHOWN
LOWER SURFACE OPPOSITE
PLAN VIEW

Elevator Skin Repairs (Graphite Composite Elevator)
Figure 1 (Sheet 1)


BOEING PROPRIETARY - Copyright © - Unpublished Work - See title page for details.

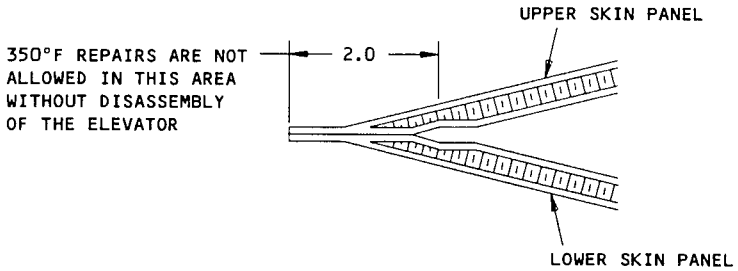


SECTION A-A

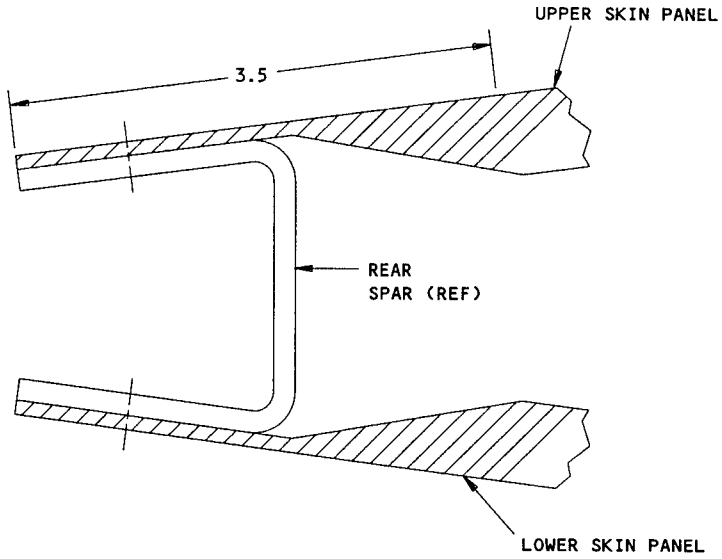


SECTION B-B

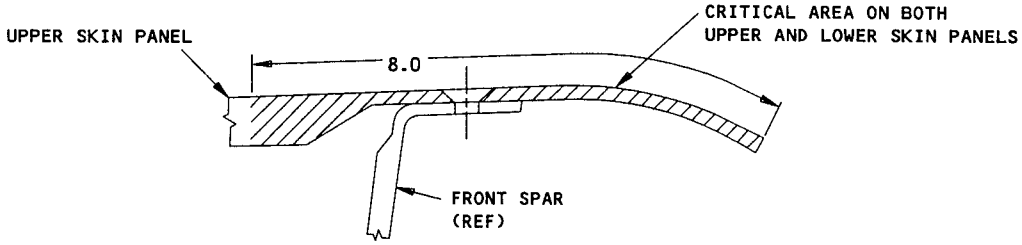


CRITICAL AREAS (SHADED) CONTACT THE BOEING COMPANY FOR REPAIR INFORMATION

SECTION C-C

Elevator Skin Repairs (Graphite Composite Elevator)
Figure 1 (Sheet 2)

| DAMAGE | INTERIM REPAIRS [B] | PERMANENT REPAIRS | | |
|---|---|---|---|---|
| | WET LAYUP 150°F CURE (SRM 51-40-12) | WET LAYUP 200-230°F CURE (SRM 51-40-15) | 250°F CURE (SRM 51-40-13) | 350°F CURE (SRM 51-40-14) |
| HOLES | 2.0 MAX DIA NOT TO EXCEED 30% OF SMALLEST DIMENSION ACROSS HONEYCOMB PANEL AT THE DAMAGE LOCATION. REPAIR AS GIVEN IN SRM 51-40-12, REPAIR 14. [A] | 5.0 MAX DIA NOT TO EXCEED 50% OF SMALLEST DIMENSION ACROSS HONEYCOMB PANEL AT THE DAMAGE LOCATION. USE TWO EXTRA PLIES PER FACESHEET REPAIRED [C] | 5.0 MAX DIA NOT TO EXCEED 50% OF SMALLEST DIMENSION ACROSS HONEYCOMB PANEL AT THE DAMAGE LOCATION. USE TWO EXTRA PLIES PER FACESHEET REPAIRED [C] | NO SIZE LIMIT |
| CRACKS | UP TO 5.0 INCHES LONG, REPAIR AS GIVEN IN SRM 51-40-12, REPAIR 14. [A] | USE SAME LIMITS AND REQUIREMENTS AS FOR HOLES. | | |
| DELAMI-NATION | USE SAME LIMITS AS FOR HOLES AND REPAIR AS GIVEN IN SRM 51-40-12, REPAIR 14. [A] | USE SAME LIMITS AND REQUIREMENTS AS FOR HOLES. | | |
| NICKS AND GOUGES | IF FIBER DAMAGE OR DELAMINATION EXISTS, USE SAME LIMITS AS FOR HOLES AND REPAIR AS GIVEN IN SRM 51-40-12, REPAIR 14. [A] | IF THERE IS NO FIBER DAMAGE OR DELAMINATION, FILL NICKS OR GOUGES AS GIVEN IN SRM 51-40-12.<br>IF FIBER DAMAGE OR DELAMINATION EXISTS, USE SAME LIMITS AND REQUIREMENTS AS FOR HOLES. | | |
| DENTS | USE SAME LIMITS AS FOR HOLES AND REPAIR AS GIVEN IN SRM 51-40-12, REPAIR 14. [A] | USE SAME LIMITS AND REQUIREMENTS AS FOR HOLES. | | |

REPAIR DATA FOR 350°F CURE HONEYCOMB PANELS
TABLE I

NOTES

- THESE REPAIRS WILL NOT HAVE AN EFFECT ON A STRUCTURALLY SIGNIFICANT ITEM (SSI) GIVEN IN SRM 51-00-4, FIG. 3. THUS, NO CHANGE TO THE SUPPLEMENTAL STRUCTURAL INSPECTION DOCUMENT (SSID) INSPECTION PROGRAM IS NECESSARY.
- REFER TO SRM 51-10 FOR INVESTIGATION AND CLEANUP OF DAMAGE.
- REFINISH REWORKED AREAS AS GIVEN IN AMM 51-20.
- REFER TO SRM 51-70 FOR AERODYNAMIC SMOOTHNESS REQUIREMENTS. WHERE THE DAMAGE EXCEEDS THE LIMITS SHOWN IN SRM 51-70, CONSIDERATION SHOULD BE GIVEN TO THE LOSS OF PERFORMANCE INVOLVED.
- WHERE NO REPAIR IS SPECIFIED, USE THE REPAIR INDEX IN THE APPROPRIATE REPAIR SECTION OF SRM 51-40 TO DETERMINE THE REPAIR TO BE USED.

[A] LIMITED TO REPAIR OF DAMAGE TO ONE FACESHEET SKIN AND HONEYCOMB CORE. ONE REPAIR FOR EACH SQUARE FOOT OF AREA AND MINIMUM OF 6.0 INCHES (EDGE TO EDGE) FROM ALL OTHER DAMAGE (ON EITHER SIDE OF PANEL), FASTENER HOLE, OR EDGE OF PANEL.

[B] INSPECT INTERIM REPAIR USING NDI METHODS AS GIVEN IN SRM 51-40-12 EVERY AIRPLANE "2A" CHECK. A PERMANENT REPAIR IS NECESSARY IF ANY DETERIORATION IS EVIDENT. THESE REPAIRS HAVE FAA APPROVAL CONTINGENT ON ACCOMPLISHMENT OF THE INSPECTIONS AT THE NECESSARY INTERVALS.

[C] ONE REPAIR FOR EACH SQUARE FOOT OF AREA AND A MINIMUM OF 6.0 INCHES (EDGE TO EDGE) FROM ALL OTHER DAMAGE (ON EITHER SIDE OF PANEL), FASTENER HOLE, OR EDGE OF PANEL.

[D] GRAPHITE/EPOXY HONEYCOMB SANDWICH. REFER TO TABLE I FOR REPAIR DATA.

Elevator Skin Repairs (Graphite Composite Elevator)
Figure 1 (Sheet 3)


BOEING PROPRIETARY - Copyright © - Unpublished Work - See title page for details.

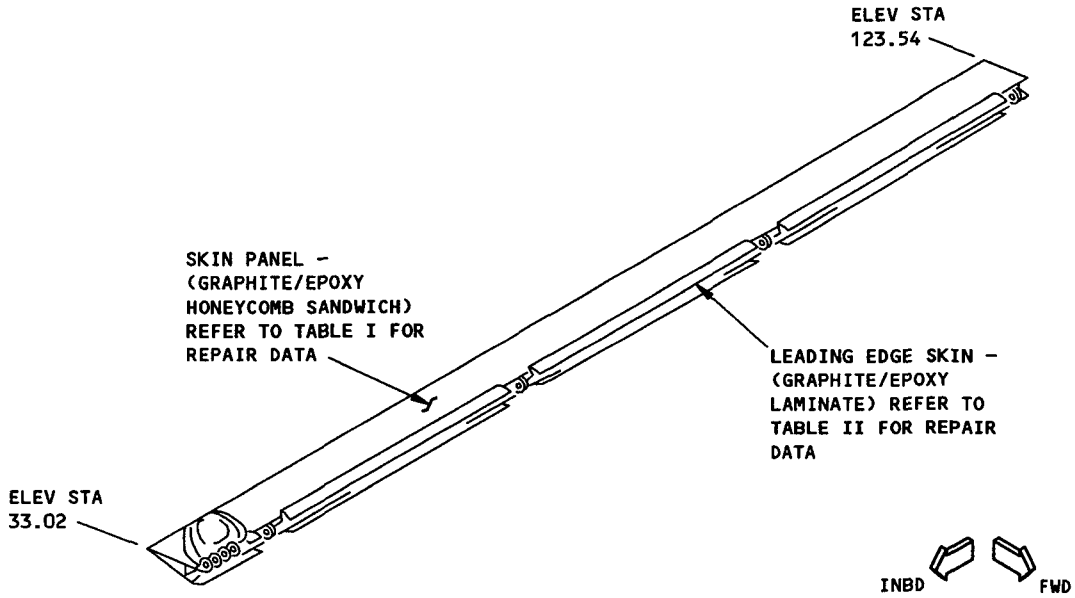


LEFT SIDE SHOWN
RIGHT SIDE OPPOSITE

## NOTES

- THESE REPAIRS WILL NOT HAVE AN EFFECT ON A STRUCTURALLY SIGNIFICANT ITEM (SSI) GIVEN IN SRM 51-00-4, FIG. 3. THUS, NO CHANGE TO THE SUPPLEMENTAL STRUCTURAL INSPECTION DOCUMENT (SSID) INSPECTION PROGRAM IS NECESSARY.
- REFINISH REWORKED AREAS AS GIVEN IN AMM 51-20.
- REFER TO SRM 51-70 FOR AERODYNAMIC SMOOTHNESS REQUIREMENTS. WHERE THE DAMAGE EXCEEDS THE LIMITS SHOWN IN SRM 51-70, CONSIDERATION SHOULD BE GIVEN TO THE LOSS OF PERFORMANCE INVOLVED.
- WHERE NO REPAIR IS SPECIFIED, USE THE REPAIR INDEX IN THE APPROPRIATE REPAIR SECTION OF SRM 51-40 TO DETERMINE THE REPAIR TO BE USED.
- REFER TO SRM 51-10 FOR INVESTIGATION AND CLEANUP OF DAMAGE.

[A] LIMITED TO REPAIR OF DAMAGE TO ONE FACE-SHEET SKIN AND HONEYCOMB CORE. ONE REPAIR PER SQUARE FOOT OF AREA AND MINIMUM OF 2.0 INCHES (EDGE TO EDGE) FROM ANY OTHER DAMAGE (ON EITHER SIDE OF PANEL), FASTENER HOLE, OR EDGE OF PANEL.

[B] INSPECT INTERIM REPAIR USING NDI METHODS AS GIVEN IN SRM 51-40-12 EVERY AIRPLANE "2A" CHECK. PERMANENT REPAIR IS REQUIRED IF ANY ANY DETERIORATION IS EVIDENT. THESE REPAIRS HAVE FAA APPROVAL CONTINGENT ON ACCOMPLISHMENT OF THE INSPECTIONS AT THE REQUIRED INTERVALS.

[C] ONE REPAIR PER SQUARE FOOT OF AREA AND A MINIMUM OF 2.0 INCHES (EDGE TO EDGE) FROM ANY OTHER DAMAGE (ON EITHER SIDE OF PANEL), FASTENER HOLE, OR EDGE OF PANEL.

[D] ONE REPAIR PER SQUARE FOOT OF AREA AND A MINIMUM OF 1.0 INCH (EDGE TO EDGE) FROM ANY OTHER DAMAGE, FASTENER HOLE, OR EDGE OF PART (ON EITHER SIDE OF PART).

Elevator Tab Skin Repair (Graphite Composite Elevator)
Figure 2 (Sheet 1)


BOEING PROPRIETARY - Copyright © - Unpublished Work - See title page for details.

| DAMAGE | INTERIM REPAIRS [B] | PERMANENT REPAIRS | | |
|---|---|---|---|---|
| | WET LAYUP 150°F CURE (51-40-12) | WET LAYUP 250°F CURE (51-40-15) | 250°F CURE (51-40-13) | 350°F CURE (51-40-14) |
| HOLES | 2.0 MAX DIA NOT TO EXCEED 30% OF SMALLEST DIMENSION ACROSS HONEYCOMB PANEL AT THE DAMAGE LOCATION. REPAIR PER 51-40-12, REPAIR 14. [A] | 4.0 MAX DIA NOT TO EXCEED 50% OF SMALLEST DIMENSION ACROSS HONEYCOMB PANEL AT THE DAMAGE LOCATION. USE TWO EXTRA PLIES PER FACESHEET REPAIRED [C] | 4.0 MAX DIA NOT TO EXCEED 50% OF SMALLEST DIMENSION ACROSS HONEYCOMB PANEL AT THE DAMAGE LOCATION. USE TWO EXTRA PLIES PER FACESHEET REPAIRED [C] | NO SIZE LIMIT |
| CRACKS | UP TO 4.0 INCHES LONG, REPAIR PER 51-40-12, REPAIR 14. [A] | USE SAME LIMITS AND REQUIREMENTS AS FOR HOLES. | | |
| DELAMI-NATION | USE SAME LIMITS AS FOR HOLES AND REPAIR PER 51-40-12, REPAIR 14. [A] | USE SAME LIMITS AND REQUIREMENTS AS FOR HOLES. | | |
| NICKS AND GOUGES | IF FIBER DAMAGE OR DELAMINATION EXISTS, USE SAME LIMITS AS FOR HOLES AND REPAIR PER 51-40-12, REPAIR 14. [A] | IF THERE IS NO FIBER DAMAGE OR DELAMINATION, FILL NICKS OR GOUGES PER 51-40-12.<br>IF FIBER DAMAGE OR DELAMINATION EXISTS, USE SAME LIMITS AND REQUIREMENTS AS FOR HOLES. | | |
| DENTS | USE SAME LIMITS AS FOR HOLES AND REPAIR PER 51-40-12, REPAIR 14. [A] | USE SAME LIMITS AND REQUIREMENTS AS FOR HOLES. | | |

REPAIR DATA FOR 350°F CURE HONEYCOMB PANELS
TABLE I

Elevator Tab Skin Repair (Graphite Composite Elevator)
Figure 2 (Sheet 2)

136879

| DAMAGE | INTERIM REPAIRS [B] | PERMANENT REPAIRS | | |
|---|---|---|---|---|
| | WET LAYUP 150°F CURE (51-40-12) | WET LAYUP 250°F CURE (51-40-15) | 250°F CURE (51-40-13) | 350°F CURE (51-40-14) |
| HOLES | 2.0 MAX DIA NOT TO EXCEED 30% OF SMALLEST DIMENSION ACROSS LAMINATE PANEL AT THE DAMAGE LOCATION. REPAIR PER 51-40-12, REPAIR 14. [D] | 4.0 MAX DIA NOT TO EXCEED 50% OF SMALLEST DIMENSION ACROSS LAMINATE PANEL AT THE DAMAGE LOCATION. USE TWO EXTRA PLIES PER SIDE [D] | 4.0 MAX DIA NOT TO EXCEED 50% OF SMALLEST DIMENSION ACROSS LAMINATE PANEL AT THE DAMAGE LOCATION. USE TWO EXTRA PLIES PER SIDE | NO SIZE LIMIT |
| CRACKS | UP TO 4.0 INCHES LONG, REPAIR PER 51-40-12, REPAIR 14. [D] | USE SAME LIMITS AND REQUIREMENTS AS FOR HOLES. | | |
| DELAMI-NATION | USE SAME LIMITS AS FOR HOLES AND REPAIR PER 51-40-12, REPAIR 14. [D] | USE SAME LIMITS AND REQUIREMENTS AS FOR HOLES. | | |
| NICKS AND GOUGES | IF FIBER DAMAGE OR DELAMINATION EXISTS, USE SAME LIMITS AS FOR HOLES AND REPAIR PER 51-40-12, REPAIR 14. [D] | IF THERE IS NO FIBER DAMAGE OR DELAMINATION, FILL NICKS OR GOUGES PER 51-40-12.<br>IF FIBER DAMAGE OR DELAMINATION EXISTS, USE SAME LIMITS AND REQUIREMENTS AS FOR HOLES. | | |
| DENTS | USE SAME LIMITS AS FOR HOLES AND REPAIR PER 51-40-12, REPAIR 14. [D] | UP TO 2.0 IN. DIA WITH NO FIBER DAMAGE OR DELAMINATION, REPAIR PER 51-40-12, REPAIR 12. [D]<br>IF OVER 2.0 IN. DIA OR WITH FIBER DAMAGE OR DELAMINATION, USE SAME LIMITS AND REQUIREMENTS AS FOR HOLES. | | |

REPAIR DATA FOR 350°F CURE LAMINATES
TABLE II

Elevator Tab Skin Repair (Graphite Composite Elevator)
Figure 2 (Sheet 3)

136880

## REPAIR INSTRUCTIONS

1. Drill out the fasteners and remove the elevator skin panels as necessary to gain access to the damaged skin.
2. Rework or remove the damage. Use one of the procedures that follow:
   (a) If the damage is limited to the flange, cut or trim the damage as needed.
   (b) If the flange is cracked, stop drill a 0.25-inch hole at the end of all the cracks that do not end at a fastener hole.
   NOTE: If (a) of (b) are not applicable, cut out the damaged chord and replace it with a filler as shown.
3. If the rib web is damaged, install a bonded and riveted repair as given in SRM 55-10-4, Fig. 2.
4. Remove the web stiffeners and fasteners as necessary to install the repair parts on the chord or web.
5. Make the repair parts.
6. Drill the fastener holes in the repair parts to match the initial fastener holes in the rib chord.
7. Remove all the burrs, nicks, scratches, sharp edged and corners on all the repair parts and the bare surfaces of the initial parts.
8. Apply a chemical conversion coating to all the repair parts and the bare surfaces of the initial parts as given in SRM 51-10-2.
9. Install the repair parts and the fasteners. Replace the stiffeners as necessary at their initial location. Install a filler, if necessary, under the stiffeners.
10. Apply the finish as given in AMM 51-21.
11. Replace all the skin panels that were removed. Use the same fastener type and size as the initial installation.
12. Apply the exterior finish as given in AMM 51-21.
13. Do a balance of the elevator again as given in SRM 51-80.

## NOTES

- THIS REPAIR WILL NOT HAVE AN EFFECT ON A STRUCTURALLY SIGNIFICANT ITEM (SSI) GIVEN IN SRM 51-00-4, FIG. 3. THUS, NO CHANGE TO THE SUPPLEMENTAL STRUCTURAL INSPECTION DOCUMENT (SSID) INSPECTION PROGRAM IS NECESSARY.
- REFER TO SRM 51-10-1 FOR INVESTIGATION AND CLEANUP OF DAMAGE.
- REFER TO SRM 51-10-2 FOR METAL PROTECTIVE TREATMENT.
- REFER TO SRM 51-30 FOR FASTENER CODE, REMOVAL AND INSTALLATION, HOLE SIZES AND EDGE MARGINS.
- NUMBER OF FASTENERS THAT ARE NECESSARY ARE FOR EACH SIDE OF DAMAGE.

## FASTENER SYMBOLS

+ INITIAL FASTENER LOCATIONS

Elevator Rib Chord Repair
Figure 1 (Sheet 1)


BOEING PROPRIETARY - Copyright © - Unpublished Work - See title page for details.

| REPAIR MATERIAL | | | | | | | |
|---|---|---|---|---|---|---|---|
| LOCATION → | | TEE CHORD ELEV STA 39.02, 149.12 218.34 | | TEE CHORD ELEV STA 66.54, 94.07, 121.59 176.64, 195.00, 213.32 | | ANGLE CHORD ELEV INBD CLOSURE RIB 23.40 | |
| PART | | QTY | MATERIAL | QTY | MATERIAL | QTY | MATERIAL |
| 1 | ANGLE | 2 | .040 CLAD 2024-0 HT-T3 | 2 | .032 CLAD 2024-0 HT-T3 | | |
| 2 | PLATE | 2 | .040 CLAD 2024-T4 | 2 | .032 CLAD 2024-T4 | | |
| 3 | FILLER | 1 | .07 CLAD 2024-T3 | 1 | .05 CLAD 2024-T3 | | |
| 4 | FILLER | 1 | .07 CLAD 2024-T3 | 1 | .05 CLAD 2024-T3 | | |
| 5 | FILLER | 1 | .040 CLAD 2024-T3 | 1 | .032 CLAD 2024-T3 | | |
| 6 | ANGLE | | | | | 1 | .063 CLAD 2024-0 HT-T3 |
| 7 | ANGLE | | | | | 1 | .056 CLAD 2024-0 HT-T3 |
| ROW A | RIVET | 4 | BACR15CE-D5 | 4 | BACR15CE-D5 | 4 | BACR15CE-D5 |
| ROW B | RIVET | 4 | MS20470-D5 | 4 | MS20470-D5 | 4 | MS20470-D5 |
| ROW C | RIVET | 4 | BACR15CE-D5 | 4 | BACR15CE-D5 | | |



Elevator Rib Chord Repair
Figure 1 (Sheet 2 of 3)

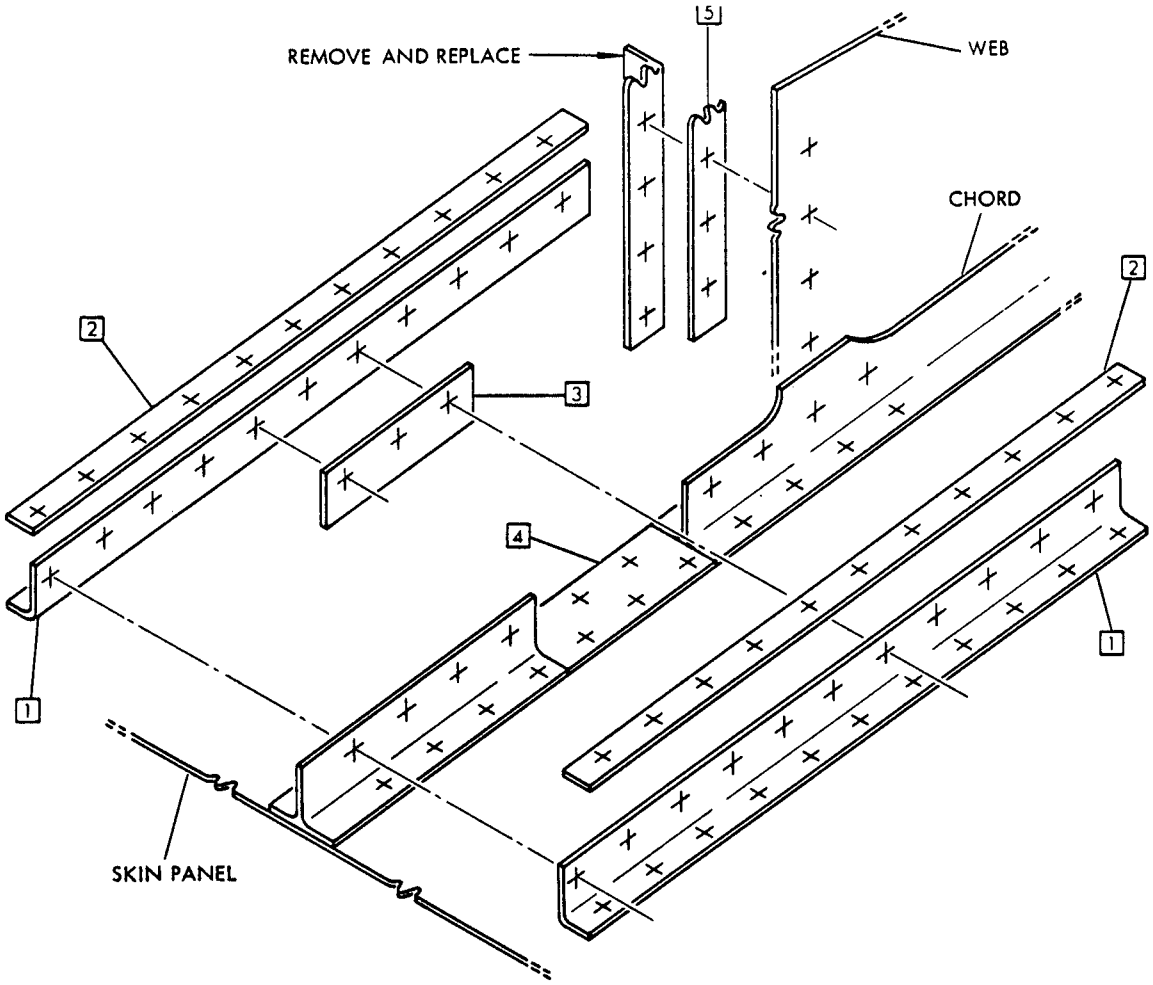


ANGLE CHORD AND FORMED ANGLE CHORD SIMILAR

TEE CHORD REPAIR SHOWN

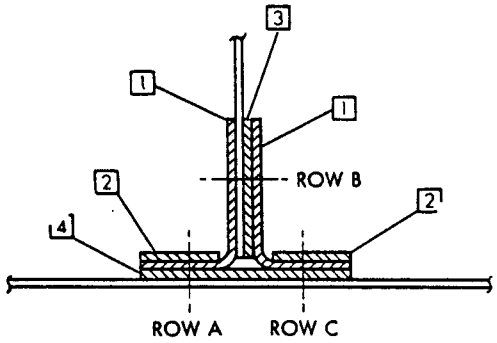


TEE CHORD REPAIR

SECTION THROUGH REPAIR

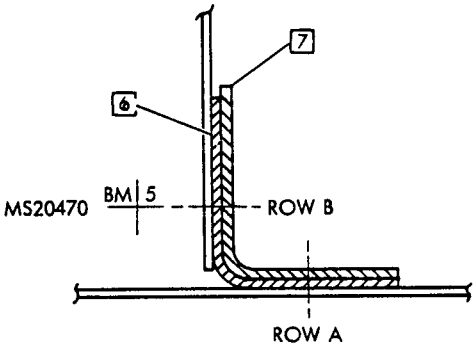


ANGLE CHORD REPAIR INBD CLOSURE RIB

SECTION THROUGH REPAIR



Elevator Rib Chord Repair
Figure 1 (Sheet 3 of 3)

## SERVICE BULLETIN REPAIRS - ELEVATOR SPARS

The following Service Bulletins contain spar repairs which are available for use where specific damage has been encountered. Usually, the Service Bulletin also covers preventive modification data which operators are encouraged to use to eliminate the need for repair.

| DAMAGED AREA | CUM LINE NUMBER EFFECTIVITY [A] | SB NUMBER |
|---|---|---|
| ELEVATOR REAR SPAR | 1 THRU 491 | 737-55-1022 |

[A] FOR AIRPLANES ON WHICH PREVENTIVE MODIFICATION HAS NOT BEEN ACCOMPLISHED

REPAIR INSTRUCTIONS

1. Drill out leading edge skin fasteners and remove skin as required to gain access to damaged spar chord.

2. Rework or remove damage by choosing any one of the following methods as required and then complete all repair steps as outlined.

   (a) If only the flanges are damaged then cut out or trim only the damaged portion of the flanges as required.

   (b) If the flanges are cracked then stop drill with 0.25 diameter hole at end of all cracks that do not end in a rivet hole.

   (c) If above methods cannot be used then cut out the damaged chord and replace with a filler section as shown.

3. If the spar web is damaged install a bonded and riveted repair similar to 55-10-4, Fig. 2.

4. Remove web stiffeners and fasteners as required to install repair parts on chord or web.

5. Fabricate and form repair parts as shown in details I or II whichever is applicable.

6. Locate and drill fastener holes in repair parts to match original fastener holes in spar chord.

7. Remove all burrs, nicks, scratches, sharp edges and corners on all repair parts and trimmed original parts.

8. Break all sharp edges and corners 0.03R.

9. Apply metal protective treatment per 51-10-2 to all repair parts and any original parts that have been reworked by cutting or trimming.

10. Install repair parts and all fasteners.

11. Restore original interior finish per Maintenance Manual 51-21-0.

12. Replace all removed skins. Use equivalent fasteners of the same size and type as in original installation.

13. Replace original exterior finish per Maintenance Manual 51-21-0.

14. Rebalance per 51-80.

Elevator Front Spar Repair
Figure 1 (Sheet 1)

## NOTES

- THIS REPAIR WILL NOT HAVE AN EFFECT ON A STRUCTURALLY SIGNIFICANT ITEM (SSI) GIVEN IN SRM 51-00-4, FIG. 3. THUS, NO CHANGE TO THE SUPPLEMENTAL STRUCTURAL INSPECTION DOCUMENT (SSID) INSPECTION PROGRAM IS NECESSARY.
- REFER TO SRM 51-10-1 FOR INVESTIGATION AND CLEANUP OF DAMAGE
- REFER TO SRM 51-10-2 FOR METAL PROTECTIVE TREATMENT.
- REFER TO SRM 51-30 FOR FASTENER CODE, REMOVAL AND INSTALLATION, HOLE SIZES AND EDGE MARGINS.

[A] FRONT SPAR CHORD REPAIR IS APPLICABLE BETWEEN THE FOLLOWING ELEVATOR STATIONS:

| UPPER CHORD | LOWER CHORD |
|---|---|
| 41.63 TO 63.93 | 41.63 TO 63.93 |
| 69.15 TO 118.98 | 69.15 TO 118.98 |
| 124.20 TO 174.03 | 124.20 TO 174.03 |
| 179.25 TO 210.71 | 179.25 TO 210.71 |
| 215.69 TO 226.11 | 215.69 TO 226.11 |

[B] SAME GAGE AS THE CHORD AT THE REPAIR SECTION

## FASTENER SYMBOLS

+ INITIAL FASTENER LOCATIONS

| REPAIR MATERIAL | | | |
|---|---|---|---|
| PART | | QTY | MATERIAL |
| [1] | ANGLE | 1 | 0.050 INCH THICK CLAD 2024-0 HT-T42 |
| [2] | ANGLE | 1 | 0.050 INCH THICK CLAD 2024-0 HT-T42 |
| [3] | FILLER | 1 | 0.08 INCH THICK CLAD 2024-T3 |
| [4] | FILLER | 1 | 0.10 INCH THICK CLAD 2024-T3 |
| [5] | FILLER | 2 | 0.08 INCH THICK CLAD 2024-T3 |
| [6] | ANGLE | 1 | 0.050 INCH THICK CLAD 2024-0 HT-T4 |
| [7] | ANGLE | 1 | 0.050 INCH THICK CLAD 2024-0 HT-T4 |
| [8] | FILLER | 1 | CLAD 2024-T3 [B] |
| [9] | FILLER | 1 | CLAD 2024-T3 [B] |
| [10] | FILLER | 2 | CLAD 2024-T3 [B] |

Elevator Front Spar Repair
Figure 1 (Sheet 2)


BOEING PROPRIETARY - Copyright © - Unpublished Work - See title page for details.

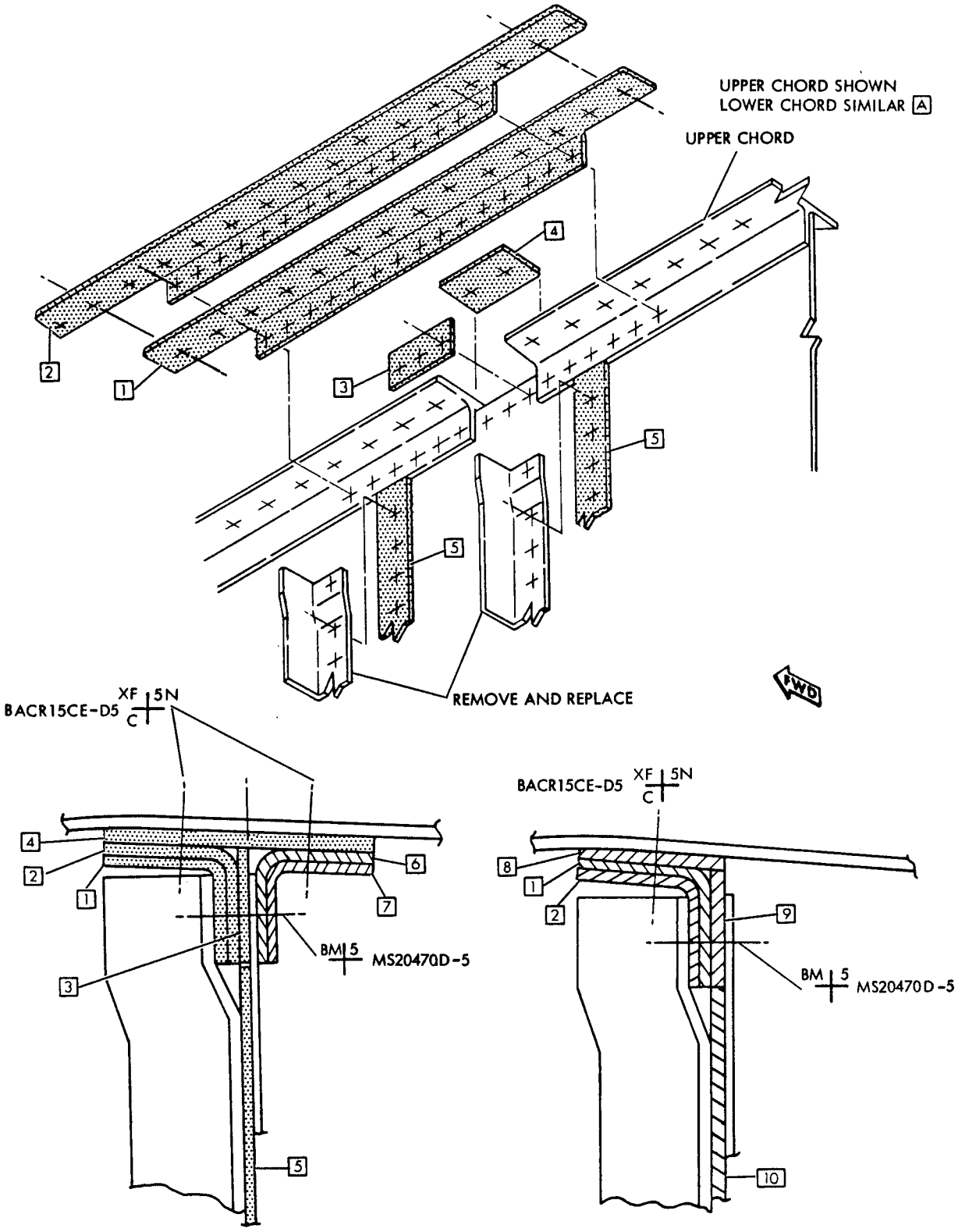


SECTION THROUGH REPAIR
SPAR INBOARD OF ELEV STA 146.51
DETAIL I

SECTION THROUGH REPAIR
SPAR OUTBOARD OF ELEV STA 146.51
DETAIL II



Elevator Front Spar Repair
Figure 1 (Sheet 3)

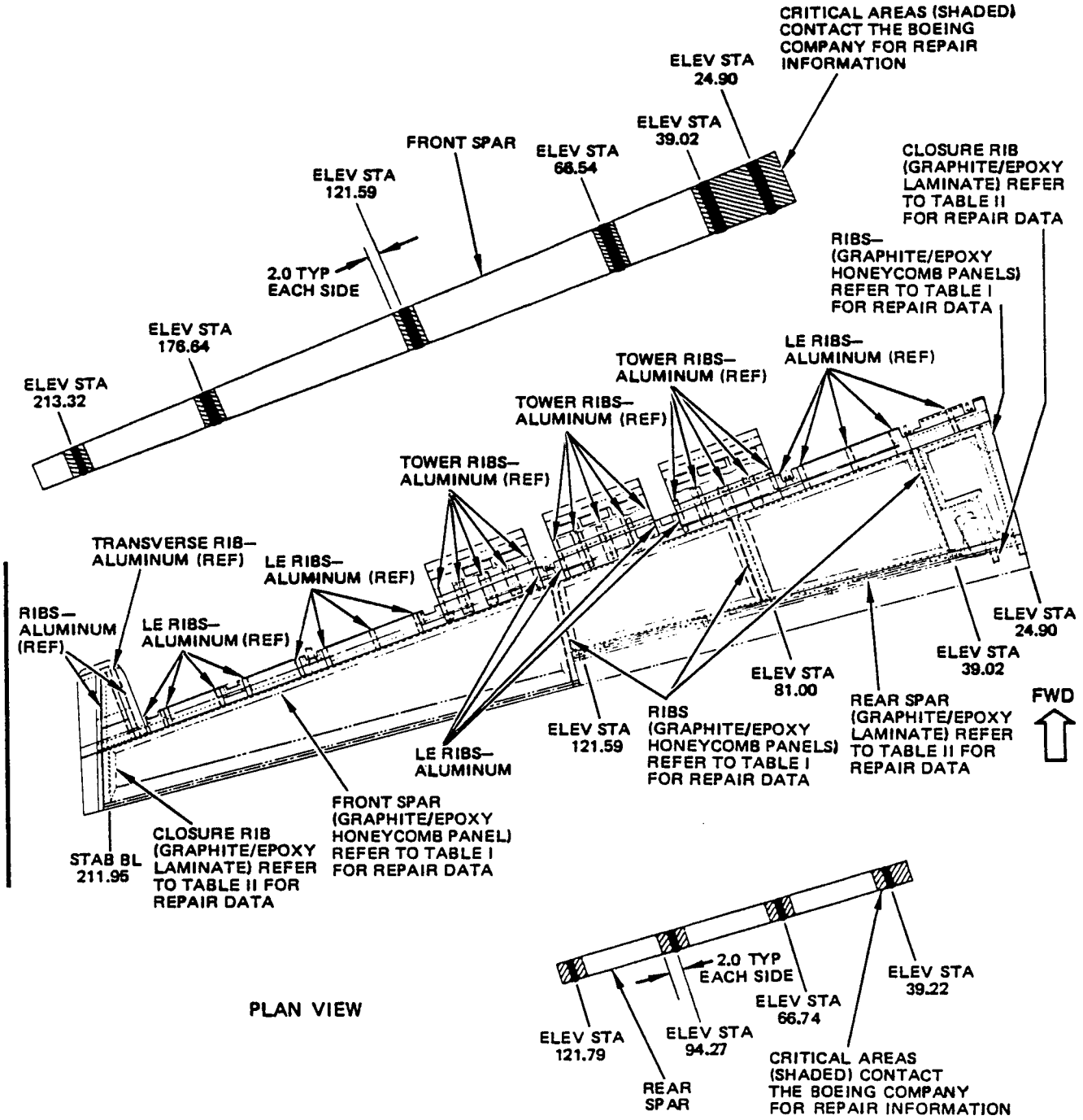




Elevator Structure Repairs (Graphite Composite Elevator)
Figure 1 (Sheet 1)

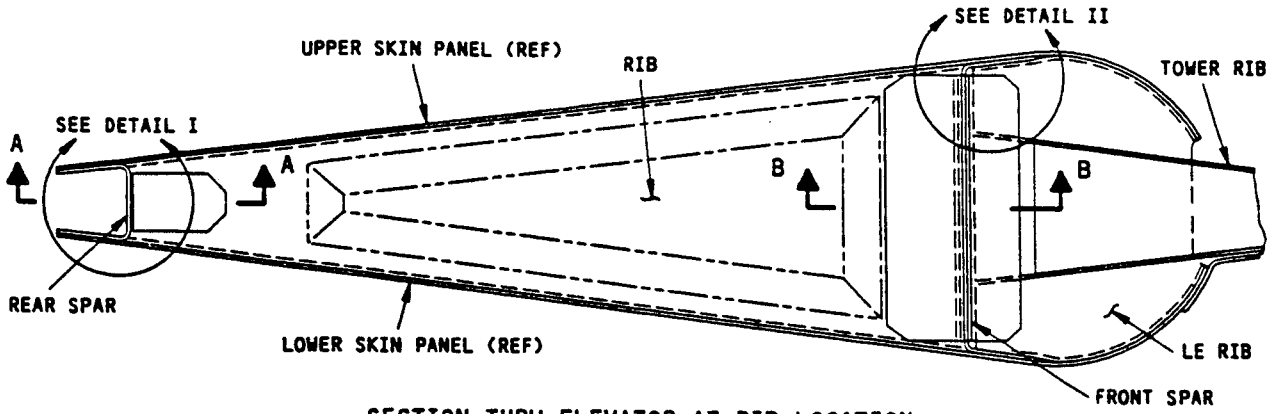


SECTION THRU ELEVATOR AT RIB LOCATION

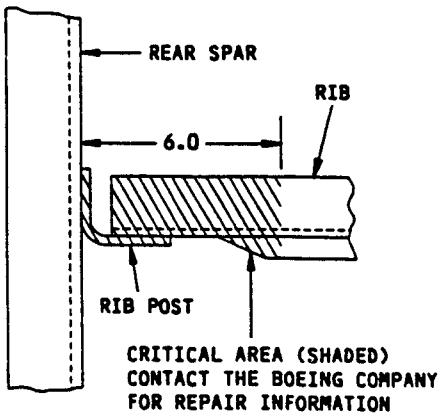


SECTION A-A

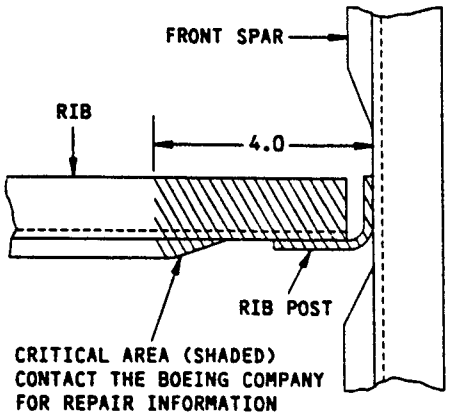


SECTION B-B

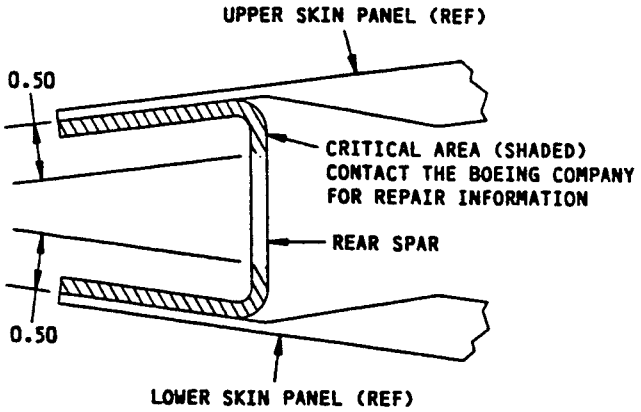


DETAIL I

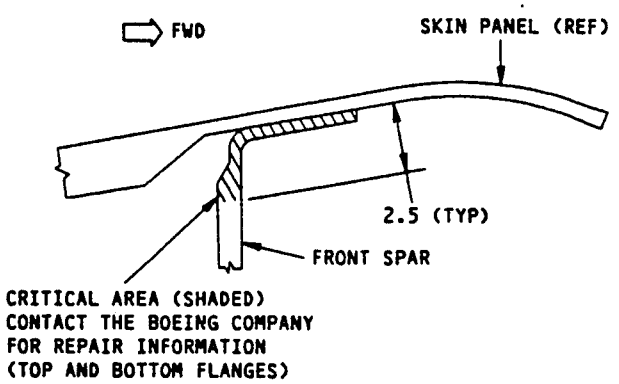


DETAIL II

Elevator Structure Repairs (Graphite Composite Elevator)
Figure 1 (Sheet 2)

136838

| DAMAGE | INTERIM REPAIRS [B] | PERMANENT REPAIRS | | |
|---|---|---|---|---|
| | WET LAYUP 150°F CURE (51-40-12) | WET LAYUP 250°F CURE (51-40-15) | 250°F CURE (51-40-13) | 350°F CURE (51-40-14) |
| HOLES | 2.0 MAX DIA NOT TO EXCEED 30% OF SMALLEST DIMENSION ACROSS HONEYCOMB PANEL AT THE DAMAGE LOCATION. REPAIR PER 51-40-12, REPAIR 14. [A] | 5.0 MAX DIA NOT TO EXCEED 50% OF SMALLEST DIMENSION ACROSS HONEYCOMB PANEL AT THE DAMAGE LOCATION. USE TWO EXTRA PLIES PER FACESHEET REPAIRED [C] | 5.0 MAX DIA NOT TO EXCEED 50% OF SMALLEST DIMENSION ACROSS HONEYCOMB PANEL AT THE DAMAGE LOCATION. USE TWO EXTRA PLIES PER FACESHEET REPAIRED [C] | NO SIZE LIMIT |
| CRACKS | UP TO 5.0 INCHES LONG, REPAIR PER 51-40-12, REPAIR 14. [A] | USE SAME LIMITS AND REQUIREMENTS AS FOR HOLES. | | |
| DELAMI-NATION | USE SAME LIMITS AS FOR HOLES AND REPAIR PER 51-40-12, REPAIR 14. [A] | USE SAME LIMITS AND REQUIREMENTS AS FOR HOLES. | | |
| NICKS AND GOUGES | IF FIBER DAMAGE OR DELAMINATION EXISTS, USE SAME LIMITS AS FOR HOLES AND REPAIR PER 51-40-12, REPAIR 14. [A] | IF THERE IS NO FIBER DAMAGE OR DELAMINATION, FILL NICKS OR GOUGES PER 51-40-12.<br>IF FIBER DAMAGE OF DELAMINATION EXISTS, USE SAME LIMITS AND REQUIREMENTS AS FOR HOLES. | | |
| DENTS | USE SAME LIMITS AS FOR HOLES AND REPAIR PER 51-40-12 REPAIR 14. [A] | USE SAME LIMITS AND REQUIREMENTS AS FOR HOLES. | | |

REPAIR DATA FOR 350°F CURE HONEYCOMB PANELS

TABLE I

NOTES

- THESE REPAIRS WILL NOT HAVE AN EFFECT ON A STRUCTURALLY SIGNIFICANT ITEM (SSI) GIVEN IN SRM 51-00-4, FIG. 3. THUS, NO CHANGE TO THE SUPPLEMENTAL STRUCTURAL INSPECTION DOCUMENT (SSID) INSPECTION PROGRAM IS NECESSARY.
- REFER TO 51-10 FOR INVESTIGATION AND CLEANUP OF DAMAGE
- REFINISH REWORKED AREAS PER 51-20 OF THE MAINTENANCE MANUAL
- REFER TO 51-70 FOR AERODYNAMIC SMOOTHNESS REQUIREMENTS. WHERE THE DAMAGE EXCEEDS THE LIMITS SHOWN IN 51-70, CONSIDERATION SHOULD BE GIVEN TO THE LOSS OF PERFORMANCE INVOLVED
- WHERE NO REPAIR IS SPECIFIED, USE THE REPAIR INDEX IN THE APPROPRIATE REPAIR SECTION OF 51-40 TO DETERMINE THE REPAIR TO BE USED

[A] LIMITED TO REPAIR OF DAMAGE TO ONE FACE-SHEET SKIN AND HONEYCOMB CORE. ONE REPAIR PER SQUARE FOOT OF AREA AND MINIMUM OF 6.0 INCHES (EDGE TO EDGE) FROM ANY OTHER DAMAGE (ON EITHER SIDE OF PANEL), FASTENER HOLE, OR EDGE OF PANEL

[B] INSPECT INTERIM REPAIR USING NDI METHODS PER 51-40-12 EVERY AIRPLANE "2A" CHECK. PERMANENT REPAIR IS REQUIRED IF ANY DETERIORATION IS EVIDENT. THESE REPAIRS HAVE FAA APPROVAL CONTINGENT ON ACCOMPLISHMENT OF THE INSPECTIONS AT THE REQUIRED INTERVALS

[C] ONE REPAIR PER SQUARE FOOT OF AREA AND A MINIMUM OF 6.0 INCHES (EDGE TO EDGE) FROM ANY OTHER DAMAGE (ON EITHER SIDE OF PANEL), FASTENER HOLE, OR EDGE OF PANEL

[D] ONE REPAIR PER SQUARE FOOT OF AREA AND A MINIMUM OF 3.0 INCHES (EDGE TO EDGE) FROM ANY OTHER DAMAGE (ON EITHER SIDE OF PART), FASTENER HOLE, OR EDGE OF PART

Elevator Structure Repairs (Graphite Composite Elevator)
Figure 1 (Sheet 3)


BOEING PROPRIETARY - Copyright © - Unpublished Work - See title page for details.

| DAMAGE | INTERIM REPAIRS [B] | PERMANENT REPAIRS | | |
|---|---|---|---|---|
| | WET LAYUP 150°F CURE (51-40-12) | WET LAYUP 250°F CURE (51-40-15) | 250°F CURE (51-40-13) | 350°F CURE (51-40-14) |
| HOLES | 2.0 MAX DIA NOT TO EXCEED 30% OF SMALLEST DIMENSION ACROSS LAMINATE PANEL AT THE DAMAGE LOCATION. REPAIR PER 51-40-12, REPAIR 14. [D] | 5.0 MAX DIA NOT TO EXCEED 50% OF SMALLEST DIMENSION ACROSS LAMINATE PANEL AT THE DAMAGE LOCATION. USE TWO EXTRA PLIES PER SIDE [D] | 5.0 MAX DIA NOT TO EXCEED 50% OF SMALLEST DIMENSION ACROSS LAMINATE PANEL AT THE DAMAGE LOCATION. USE TWO EXTRA PLIES PER SIDE | NO SIZE LIMIT |
| CRACKS | UP TO 5.0 INCHES LONG, REPAIR PER 51-40-12, REPAIR 14. [D] | USE SAME LIMITS AND REQUIREMENTS AS FOR HOLES. | | |
| DELAMI-NATION | USE SAME LIMITS AS FOR HOLES AND REPAIR PER 51-40-12, REPAIR 14. [D] | USE SAME LIMITS AND REQUIREMENTS AS FOR HOLES. | | |
| NICKS AND GOUGES | IF FIBER DAMAGE OR DELAMINATION EXISTS, USE SAME LIMITS AS FOR HOLES AND REPAIR PER 51-40-12, REPAIR 14. [D] | IF THERE IS NO FIBER DAMAGE OR DELAMINATION, FILL NICKS OR GOUGES PER 51-40-12.<br>IF FIBER DAMAGE OR DELAMINATION EXISTS, USE SAME LIMITS AND REQUIREMENTS AS FOR HOLES. | | |
| DENTS | USE SAME LIMITS AS FOR HOLES AND REPAIR PER 51-40-12, REPAIR 14. [D] | UP TO 2.0 IN. DIA WITH NO FIBER DAMAGE OR DELAMINATION, REPAIR PER 51-40-12, REPAIR 12. [D]<br>IF OVER 2.0 IN. DIA OR WITH FIBER DAMAGE OR DELAMINATION, USE SAME LIMITS AND REQUIREMENTS AS FOR HOLES. | | |

REPAIR DATA FOR 350°F CURE LAMINATES

TABLE II

Elevator Structure Repairs (Graphite Composite Elevator)
Figure 1 (Sheet 4)

136893

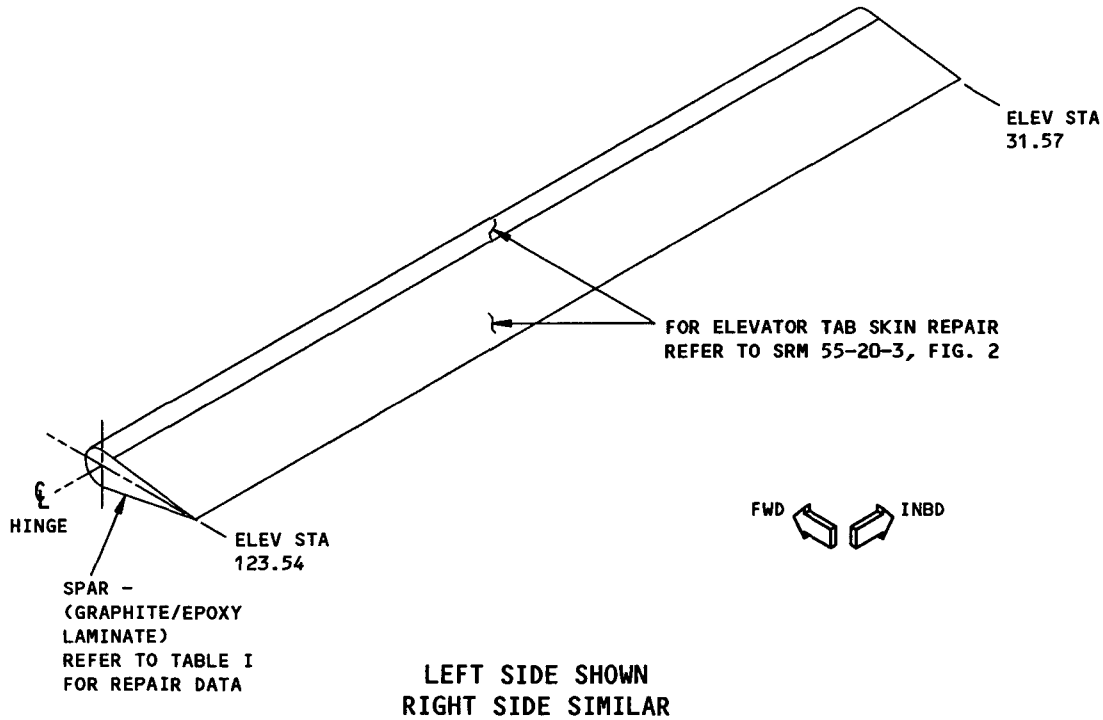


LEFT SIDE SHOWN
RIGHT SIDE SIMILAR

## NOTES

- THESE REPAIRS WILL NOT HAVE AN EFFECT ON A STRUCTURALLY SIGNIFICANT ITEM (SSI) GIVEN IN SRM 51-00-4, FIG. 3. THUS, NO CHANGE TO THE SUPPLEMENTAL STRUCTURAL INSPECTION DOCUMENT (SSID) INSPECTION PROGRAM IS NECESSARY.
- REFINISH REWORKED AREAS AS GIVEN IN AMM 51-20.
- REFER TO SRM 51-70 FOR AERODYNAMIC SMOOTHNESS REQUIREMENTS. WHERE THE DAMAGE EXCEEDS THE LIMITS SHOWN IN SRM 51-70, CONSIDERATION SHOULD BE GIVEN TO THE LOSS OF PERFORMANCE INVOLVED.
- WHERE NO REPAIR IS SPECIFIED, USE THE REPAIR INDEX IN THE APPLICABLE REPAIR SECTION OF SRM 51-40 TO DETERMINE THE REPAIR TO BE USED.
- REFER TO SRM 51-10 FOR INVESTIGATION AND CLEANUP OF DAMAGE.

[A] ONE REPAIR IN EACH SQUARE FOOT OF AREA AND A MINIMUM OF 3.0 INCHES (EDGE TO EDGE) FROM OTHER DAMAGE (ON EITHER SIDE OF PART), FASTENER HOLE, OR EDGE OF PART.

[B] DO AN INSPECTION OF THE INTERIM REPAIR WITH NDI PROCEDURES AS GIVEN IN SRM 51-40-12 EVERY AIRPLANE "2A" CHECK. PERMANENT REPAIR IS REQUIRED IF ANY DETERIORATION IS EVIDENT. THESE REPAIRS HAVE FAA APPROVAL CONTINGENT ON ACCOMPLISHMENT OF THE INSPECTIONS AT THE REQUIRED INTERVALS.

Elevator Tab Structure Repair (Graphite Composite Elevator)
Figure 2 (Sheet 1)


BOEING PROPRIETARY - Copyright © - Unpublished Work - See title page for details.

| DAMAGE | INTERIM REPAIRS [B] | PERMANENT REPAIRS | | |
|---|---|---|---|---|
| | WET LAYUP 150°F CURE (51-40-12) | WET LAYUP 250°F CURE (51-40-15) | 250°F CURE (51-40-13) | 350°F CURE (51-40-14) |
| HOLES | 2.0 MAX DIA NOT TO EXCEED 30% OF SMALLEST DIMENSION ACROSS LAMINATE PANEL AT THE DAMAGE LOCATION. REPAIR PER 51-40-12, REPAIR 14. [A] | 4.0 MAX DIA NOT TO EXCEED 50% OF SMALLEST DIMENSION ACROSS LAMINATE PANEL AT THE DAMAGE LOCATION. USE TWO EXTRA PLIES PER SIDE [A] | 4.0 MAX DIA NOT TO EXCEED 50% OF SMALLEST DIMENSION ACROSS LAMINATE PANEL AT THE DAMAGE LOCATION. USE TWO EXTRA PLIES PER SIDE | NO SIZE LIMIT |
| CRACKS | UP TO 4.0 INCHES LONG, REPAIR PER 51-40-12, REPAIR 14. [A] | USE SAME LIMITS AND REQUIREMENTS AS FOR HOLES. | | |
| DELAMI-NATION | USE SAME LIMITS AS FOR HOLES AND REPAIR PER 51-40-12, REPAIR 14. [A] | USE SAME LIMITS AND REQUIREMENTS AS FOR HOLES. | | |
| NICKS AND GOUGES | IF FIBER DAMAGE OR DELAMINATION EXISTS, USE SAME LIMITS AS FOR HOLES AND REPAIR PER 51-40-12, REPAIR 14. [A] | IF THERE IS NO FIBER DAMAGE OR DELAMINATION, FILL NICKS OR GOUGES PER 51-40-12.<br>IF FIBER DAMAGE OR DELAMINATION EXISTS, USE SAME LIMITS AND REQUIREMENTS AS FOR HOLES. | | |
| DENTS | USE SAME LIMITS AS FOR HOLES AND REPAIR PER 51-40-12, REPAIR 14. [A] | USE SAME LIMITS AND REQUIREMENTS AS FOR HOLES. | | |

REPAIR DATA FOR 350°F CURE LAMINATES

TABLE I

Elevator Tab Structure Repairs (Graphite Composite Elevator)
Figure 2 (Sheet 2)

136892

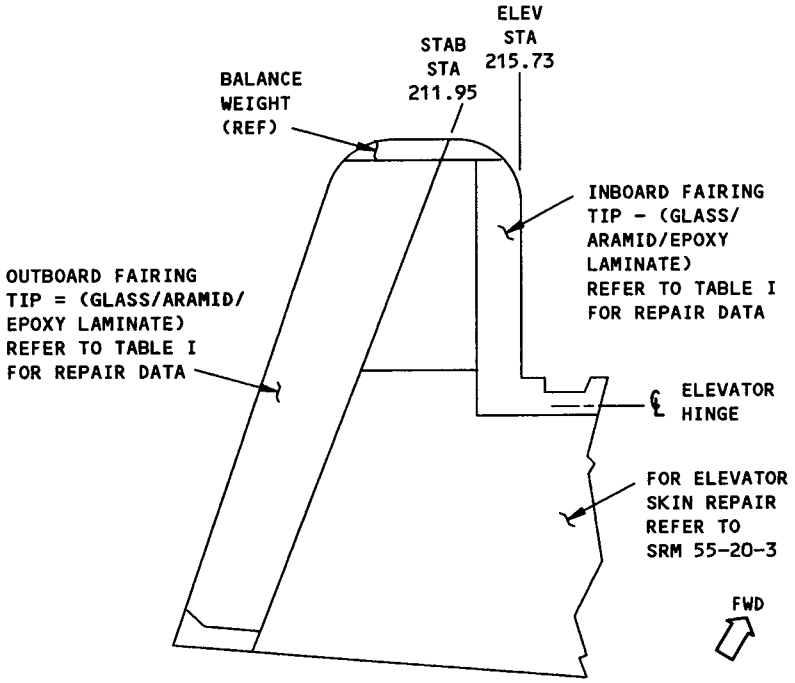


PLAN VIEW
ELEVATOR TIP

NOTES

- THESE REPAIRS WILL NOT HAVE AN EFFECT ON A STRUCTURALLY SIGNIFICANT ITEM (SSI) GIVEN IN SRM 51-00-4, FIG. 3. THUS, NO CHANGE TO THE SUPPLEMENTAL STRUCTURAL INSPECTION DOCUMENT (SSID) INSPECTION PROGRAM IS NECESSARY.
- REFINISH REWORKED AREAS AS GIVEN IN AMM 51-20.
- REFER TO SRM 51-70 FOR AERODYNAMIC SMOOTHNESS REQUIREMENTS. WHERE THE DAMAGE IS MORE THAN THE LIMITS SHOWN IN SRM 51-70, CONSIDERATION SHOULD BE GIVEN TO THE LOSS OF PERFORMANCE INVOLVED.
- WHERE NO REPAIR IS SPECIFIED, USE THE REPAIR INDEX IN THE APPLICABLE REPAIR SECTION OF SRM 51-40 TO DETERMINE THE REPAIR TO BE USED.
- REFER TO SRM 51-10 FOR INVESTIGATION AND CLEANUP OF DAMAGE.

[A] ONE REPAIR FOR EACH SQUARE FOOT OF AREA AND A MINIMUM OF 1.0 INCH (EDGE TO EDGE) FROM OTHER DAMAGE, FASTENER HOLE, OR EDGE OF PANEL.

[B] DO AN INSPECTION OF THE INTERIM REPAIR WITH NDI PROCEDURES AS GIVEN IN SRM 51-40-12 EVERY AIRPLANE "2A" CHECK. PERMANENT REPAIR IS REQUIRED IF ANY DETERIORATION IS EVIDENT. THESE REPAIRS HAVE FAA APPROVAL CONTINGENT ON ACCOMPLISHMENT OF THE INSPECTIONS AT THE REQUIRED INTERVALS.

Elevator Tip Repairs (Graphite Composite Elevator)
Figure 3 (Sheet 1)


BOEING PROPRIETARY - Copyright © - Unpublished Work - See title page for details.

| DAMAGE | INTERIM REPAIRS [B] | PERMANENT REPAIRS | | |
|---|---|---|---|---|
| | WET LAYUP ROOM TEMP (51-40-12) | WET LAYUP 150°F CURE (51-40-12) | WET LAYUP 200°F CURE (51-40-15) | 250°F CURE (51-40-13) |
| HOLES | 2.0 MAX DIA NOT TO EXCEED 30% OF SMALLEST DIMENSION ACROSS LAMINATE PANEL AT THE DAMAGE LOCATION. REPAIR PER 51-40-12, REPAIR 14. [A] | 4.0 MAX DIA NOT TO EXCEED 50% OF SMALLEST DIMENSION ACROSS LAMINATE PANEL AT THE DAMAGE LOCATION. USE TWO EXTRA PLIES PER SIDE [A] | 4.0 MAX DIA NOT TO EXCEED 50% OF SMALLEST DIMENSION ACROSS LAMINATE PANEL AT THE DAMAGE LOCATION. USE TWO EXTRA PLIES PER SIDE | NO SIZE LIMIT |
| CRACKS | UP TO 4.0 INCHES LONG, REPAIR PER 51-40-12, REPAIR 14. [A] | USE SAME LIMITS AND REQUIREMENTS AS FOR HOLES. | | |
| DELAMI-NATION | USE SAME LIMITS AS FOR HOLES AND REPAIR PER 51-40-12, REPAIR 14. [A] | USE SAME LIMITS AND REQUIREMENTS AS FOR HOLES. | | |
| NICKS AND GOUGES | IF FIBER DAMAGE OR DELAMINATION EXISTS, USE SAME LIMITS AS FOR HOLES AND REPAIR PER 51-40-12, REPAIR 14. [A] | IF THERE IS NO FIBER DAMAGE OR DELAMINATION, FILL NICKS OR GOUGES PER 51-40-12.<br>IF FIBER DAMAGE OR DELAMINATION EXISTS, USE SAME LIMITS AND REQUIREMENTS AS FOR HOLES. | | |
| DENTS | USE SAME LIMITS AS FOR HOLES AND REPAIR PER 51-40-12, REPAIR 14. [A] | UP TO 2.0 IN. DIA WITH NO FIBER DAMAGE OR DELAMINATION, REPAIR PER 51-40-12, REPAIR 12. [A]<br>IF OVER 2.0 IN. DIA OR WITH FIBER DAMAGE OR DELAMINATION, USE SAME LIMITS AND REQUIREMENTS AS FOR HOLES. | | |

REPAIR DATA FOR 250°F CURE LAMINATES

TABLE I

Elevator Tip Repairs (Graphite Composite Elevator)
Figure 3 (Sheet 2)

136891

Figures 4 and 5 have been removed. Refer to 737 SRM 55-10-7, Figures 1 and 2, for horizontal stabilizer trailing edge beam cover plate and channel repairs.

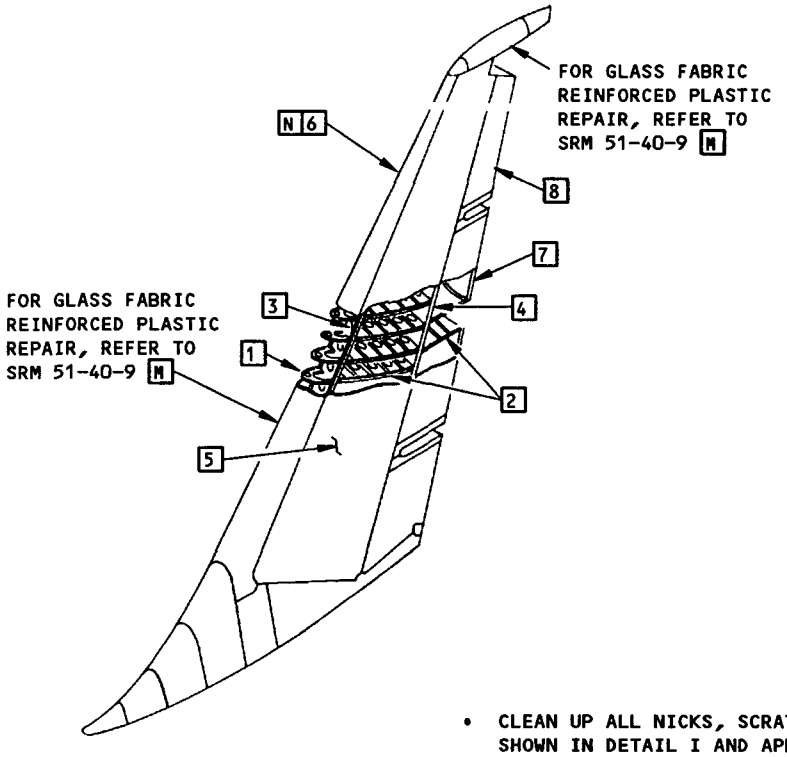


## NOTES

- DAMAGE, SUCH AS BLENDOUTS, TRIMOUTS OR DENTS:
  - THAT OCCUR TO A STRUCTURALLY SIGNIFICANT ITEM (SSI) GIVEN IN SRM 51-00-4, FIG. 3 AND,
  - THAT ARE WITHIN THE ALLOWABLE DAMAGE LIMITS OF THE BOEING SRM,

  DO NOT HAVE AN EFFECT ON THE DAMAGE TOLERANCE PROPERTIES OF THE SSI. THEREFORE, EXISTING SUPPLEMENTAL STRUCTURAL INSPECTION DOCUMENT (SSID) INSPECTION PROGRAMS REMAIN EFFECTIVE.
- FOR GENERAL REPAIR PROCEDURES, REFER TO SRM 51-10-1.
- FOR EDGE MARGIN REQUIREMENTS AFTER DAMAGE CLEAN UP, REFER TO SRM 51-30-6.
- FOR CORROSION DAMAGE CLEAN UP, REFER TO SRM 51-10-1.
- FOR ALLOWABLE CORROSION DAMAGE TO SKIN, SEE FIG. 3.
- FOR AERODYNAMIC SMOOTHNESS REQUIREMENTS, REFER TO AMM 51-70.
- A REPAIR OR REPLACEMENT OF A STRUCTURAL MEMBER IS REQUIRED WHEN IT HAS BEEN SUBJECTED TO DAMAGE SUCH AS NICKS, SCRATCHES, GOUGES, DENTS AND HOLES THAT EXCEED THE ALLOWABLE DAMAGE.
- CLEAN UP ALL NICKS, SCRATCHES AND GOUGES AS SHOWN IN DETAIL I AND APPLY METAL PROTECTIVE TREATMENT REFER TO SRM 51-10-2. NICKS, SCRATCHES AND GOUGES THAT DO NOT PENETRATE THROUGH THE CLAD SURFACES MAY BE IGNORED.

A ON ANY REFERENCE LINE A-B DRAWN BETWEEN RIB OR SPAR CHORDS, AS SHOWN IN DETAIL III, THE MAXIMUM ALLOWABLE CROSS SECTIONAL AREA REMOVED FROM THE WEB INCLUDING ALL FASTENER HOLES, SCRATCHES, AND GOUGES MUST NOT BE MORE THAN 20% OF THE TOTAL CROSS SECTIONAL AREA BETWEEN A AND B.

ON REFERENCE LINE M-N DRAWN THROUGH AN INITIAL LIGHTENING HOLE AS SHOWN IN DETAIL III. THE MAXIMUM ALLOWABLE CROSS SECTIONAL AREA REMOVED FROM THE WEB INCLUDING ALL FASTENER HOLES, SCRATCHES, AND GOUGES MUST NOT BE MORE THAN 20% OF THE TOTAL CROSS SECTIONAL AREA BETWEEN M AND N.

B MAXIMUM DEPTH (X) OF A SCRATCH, GOUGE OR NICK (SEE DETAIL I) MUST NOT BE MORE THAN THE FOLLOWING:

- 20% OF SHEET THICKNESS FOR SPAR WEBS AND LE RIBS
- 25% OF SHEET THICKNESS FOR ALL SKINS
- 20% OF FLANGE THICKNESS OR WIDTH FOR SPAR AND RIB CHORDS.

C THE MAXIMUM DEPTH OF DENT DAMAGE IN WEBS AND SKINS MUT NOT BE MORE THAN Y = 0.125.

THE MAXIMUM A/Y RATIO MUST NOT BE LESS THAN 30. DEE DETAIL II.

Allowable Damage - Vertical Stabilizer
Figure 1 (Sheet 1)


BOEING PROPRIETARY - Copyright © - Unpublished Work - See title page for details.

NOTES (CONTINUED)

C (CONTINUED)
FOR DENT LIMITS ON SKINS IN CRITICAL AERODYNAMIC AREAS SEE REQUIREMENTS OF WAVE DEPTH TO WAVE LENGTH CURVE OF FIG. 2.

A REPAIR IS REQUIRED WHEN THERE IS EVIDENCE OF PULLED OR LOOSE RIVETS, OR WHEN THE SKIN OR WEB HAS BEEN SUBJECTED TO DENT DAMAGE SHARP CREASES, GOUGES, SCRATCHES, WRINKLING, STRETCHING OR CRACKING EXCEEDING THE ABOVE ALLOWABLE LIMITS.

D NO DENT DAMAGE IS ALLOWED ON RIB OR SPAR WEB STIFFENERS. REPLACE ALL STIFFENERS THAT SHOW DENT DAMAGE.

NO DENT DAMAGE IS ALLOWED ON RIB CHORD FLANGES. REPAIR OR REPLACE ALL RIB CHORDS THAT SHOW DENT DAMAGE.

NO DENT DAMAGE IS ALLOWED ON SPAR CHORD FLANGES. REPAIR OR REPLACE SPAR CHORDS THAT SHOW DENT DAMAGE.

E HOLE DAMAGE IN WEB STIFFENERS MUST NOT EXCEED THE LARGEST EXISTING RIVET OR BOLT FASTENER DIAMETER IN THE AREA OF THE DAMAGED PART OR TO EXCEED 20% OF THE FLANGE DIMENSION H. USE WHICHEVER VALUE IS SMALLER.

FILL ALL HOLES WITH ALUMINUM RIVETS. SEE DETAIL III.

F MAX ALLOWABLE AREA REMOVED FROM TRAILING EDGE SKIN PANELS INCLUDING HOLES AND SCRATCHES SHALL NOT EXCEED 20%. REFER TO 51-40-5 FOR TYPICAL BONDED METAL STRUCTURE REPAIR.

G ON ANY REF LINE A-B DRAWN BETWEEN THE REAR SPAR CHORDS, THE MAX ALLOWABLE CROSS SECTIONAL AREA REMOVED FROM THE WEB INCLUDING ALL FASTENER HOLES, SCRATCHES AND GOUGES MUST NOT EXCEED 10% OF THE TOTAL CROSS SECTIONAL AREA BETWEEN A AND B. THE 10% LIMIT IS APPLICABLE BETWEEN STAB STA 69.4 TO 117.90. HOLES ARE NOT ALLOWED INBOARD OF STAB STA 69.4. FOR HOLES OUTBOARD OF STA 117.90 SEE A.

H ALL HOLES IN THE REAR SPAR WEB WHICH OCCUR IN THE BALANCE PANEL CAVITY MUST BE SEALED AGAINST AIR PRESSURE.

I ALL CRACKED PARTS MUST BE REPAIRED. REFER TO 51-10-1.

CRACKS AT FLANGE EDGES MUST BE REWORKED AS SHOWN IN DETAIL I.

TOTAL AREA REMOVED INCLUDING EXISTING FASTENER HOLES, SCRATCHES, GOUGES AND NICKS MUST NOT REDUCE THE TOTAL CROSS SECTIONAL AREA IN EXCESS OF 20%.

J NO HOLES ARE ALLOWED OTHER THAN THE ORIGINAL HOLES REQUIRED BY THE MANUFACTURER.

K REPAIR ALL HOLES PER 51-40-6 FIG. 1, EXCEPT EXISTING DRAIN HOLES.

L FOR ALLOWABLE DAMAGE ON GLASS FABRIC REINFORCED PANELS SEE 51-40-9 OR GLASS FABRIC REINFORCED HONEYCOMB PANELS REFER TO 51-40-6.

M GLASS FABRIC LAMINATE PANEL ON AIRPLANES WITH FLUSH MOUNTED ANTENNA.

Allowable Damage - Vertical Stabilizer
Figure 1 (Sheet 2)

[N] ON AIRPLANES WITH FLUSH MOUNTED ANTENNA METAL LEADING EDGE IS AREA CRITICAL. WHEN REPAIRING DAMAGE ELECTRICAL CONTINUITY ACROSS HOLE MUST BE PRESERVED. DO NOT USE FAYING SURFACE SEALANT OR PRIMER BETWEEN SKIN AND REPAIR PATCH. USE SUFFECIENT RIVETS - 1.00 INCH MAX SPACING AROUND PERIPHERY OF PATCH, TO PRESERVE ELECTRICAL CONTINUITY.

Allowable Damage - Vertical Stabilizer
Figure 1 (Sheet 2A)

| ITEM | LOCATION OF DAMAGE | | TYPE OF DAMAGE | | | |
|---|---|---|---|---|---|---|
| | | | CRACKS | NICKS AND GOUGES | DENTS | HOLES |
| 1 | Leading Edge Rib | Webs | 1 | See Detail I A B | See Detail II C | See Detail III A |
| | | Chords | | See Detail I B | D | |
| 2 | Trailing Edge Ribs and Inter-spar Rib | Webs | | See Detail I A B | See Detail II C | See Detail III A |
| | | Chords | | See Detail I B | D | |
| | | Web Stiffeners | | See Detail I B | D | See Detail III E |
| 3 | Front Spar | Webs | | See Detail I A B | See Detail II C | J |
| | | Chords | | See Detail I B | D | |
| | | Web Stiffeners | | See Detail I B | D | See Detail III E |
| 4 | Rear Spar | Webs | | See Detail I A B | See Detail II C | G H |
| | | Chords | | See Detail I B | D | |
| | | Web Stiffeners | | See Detail I B | D | See Detail III E |
| 5 | Skin | | | See Detail I B | See Detail II C | See Detail IV M |
| 6 | Leading Edge Skin | | | See Detail I B M L | See Detail II C M L | No Holes Allowed. Replace or Repair as Required. N |
| 7 | Trailing Edge Beam | | | See Detail I B | | |
| 8 | Trailing Edge Skin | | | L | | K |

**ALLOWABLE DAMAGE INDEX**

Allowable Damage - Vertical Stabilizer
Figure 1 (Sheet 3)

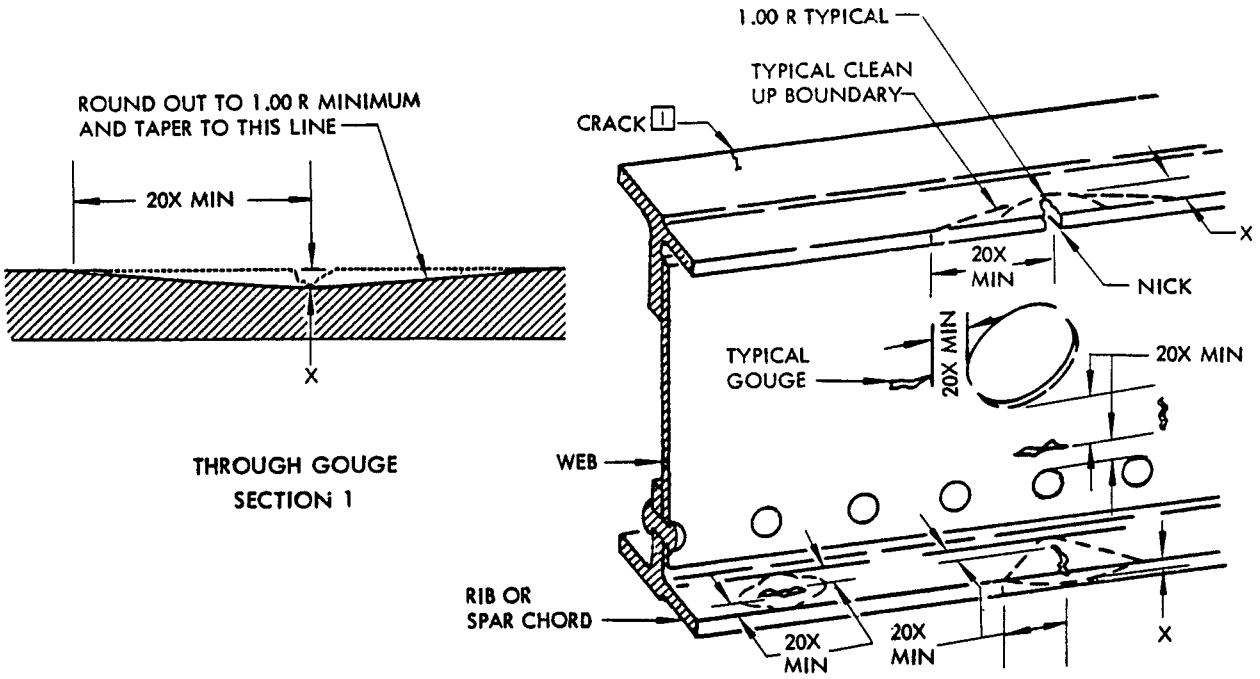


X = DEPTH OF GOUGE

NICKS AND GOUGES

DETAIL I

A = DIAMETER OF DENT

T = THICKNESS OR GAGE OF PART

Y = DEPTH OF DENT FROM CONTOUR

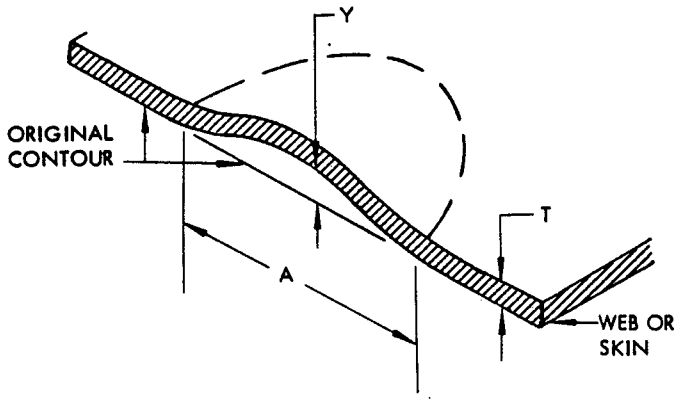


SECTION THROUGH DENT

DETAIL II



Allowable Damage - Vertical Stabilizer
Figure 1 (Sheet 4 of 6)

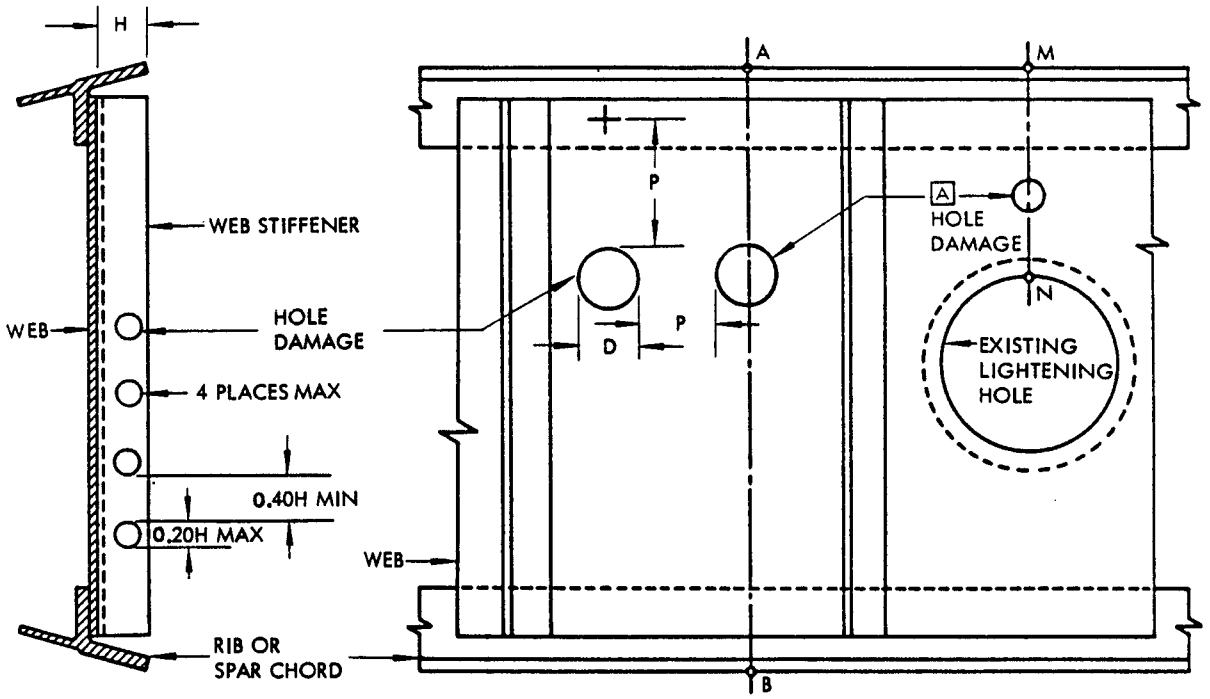


A,B,M,N = REFERENCE POINTS
D = ANY HOLE SIZE UP TO AND INCLUDING 1.00 DIA MAX
H = WIDTH OF STIFFENER FLANGE
P = 2 X D MIN

ALLOWABLE DAMAGE LIMITS FOR HOLES

DETAIL III

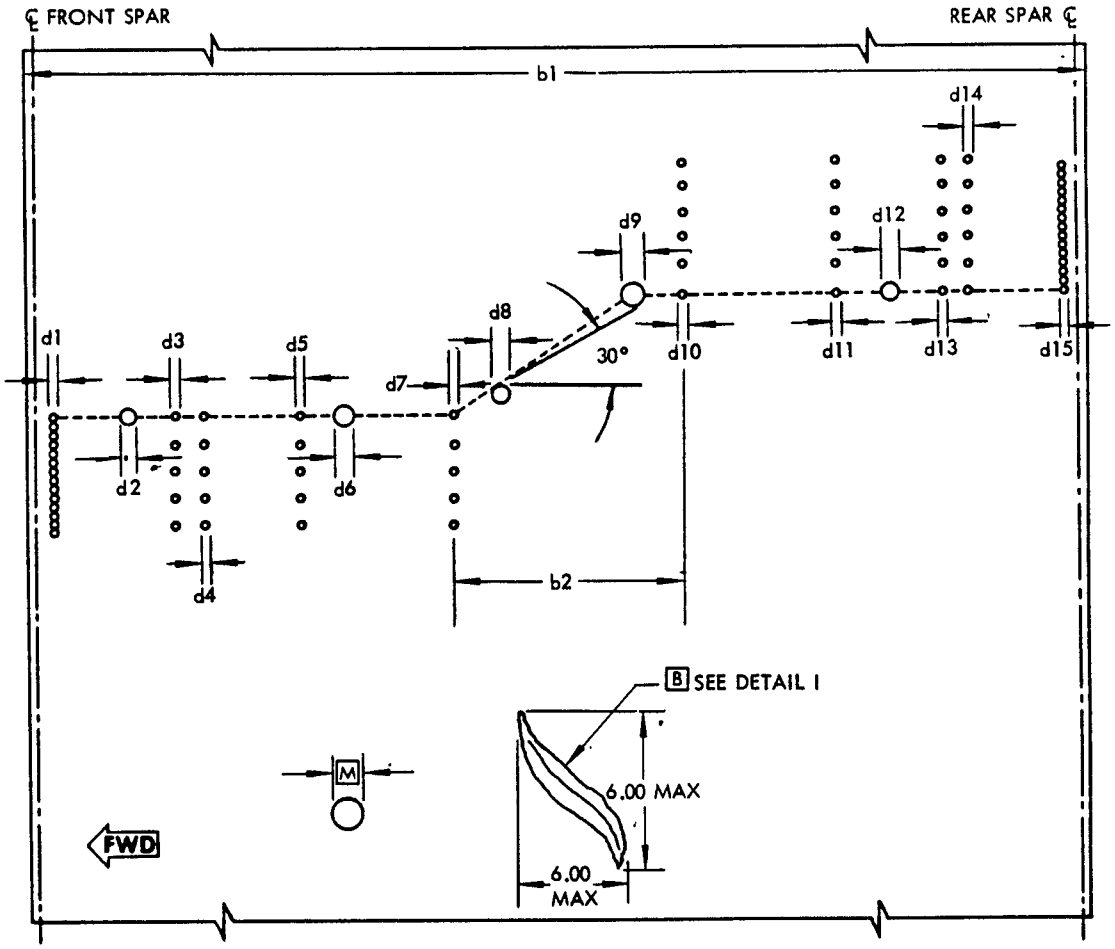


## NOTE

- HOLES IN INTERSPAR SKIN
- ON A REFERENCE LINE DRAWN BETWEEN FRONT AND REAR SPARS PERPENDICULAR TO THE REAR SPAR, THE CROSS SECTIONAL AREA REMOVED INCLUDING ALL EXISTING HOLES SHALL NOT EXCEED 15 PERCENT OF THE TOTAL CROSS SECTIONAL AREA OF THE SHEET, NOR SHALL THE CROSS SECTIONAL AREA OUT IN ANY LOCAL REGION EXCEED 15 PERCENT OF THE LOCAL, CROSS SECTIONAL AREA. ANY HOLE WITHIN 30 DEGREES OF THE CLOSEST HOLE ON THE REFERENCE LINE SHALL BE INCLUDED IN THE TOTAL CROSS SECTIONAL AREA OUT.
- INCLUDE SCRATCHES AND GOUGES IN AREA OUT.

M MAXIMUM DIAMETER OF ANY HOLE SHALL BE 4 TIMES THE SKIN THICKNESS OR 0.50 WHICHEVER IS GREATER.

$$\frac{d1 + d2 + d3 -- + d15}{b1} = 0.15 \text{ MAX}$$

$$\frac{\frac{d7}{2} + d8 + d9 + \frac{d10}{2}}{b2} = 0.15 \text{ MAX}$$

SKIN ALLOWABLE DAMAGE
DETAIL IV

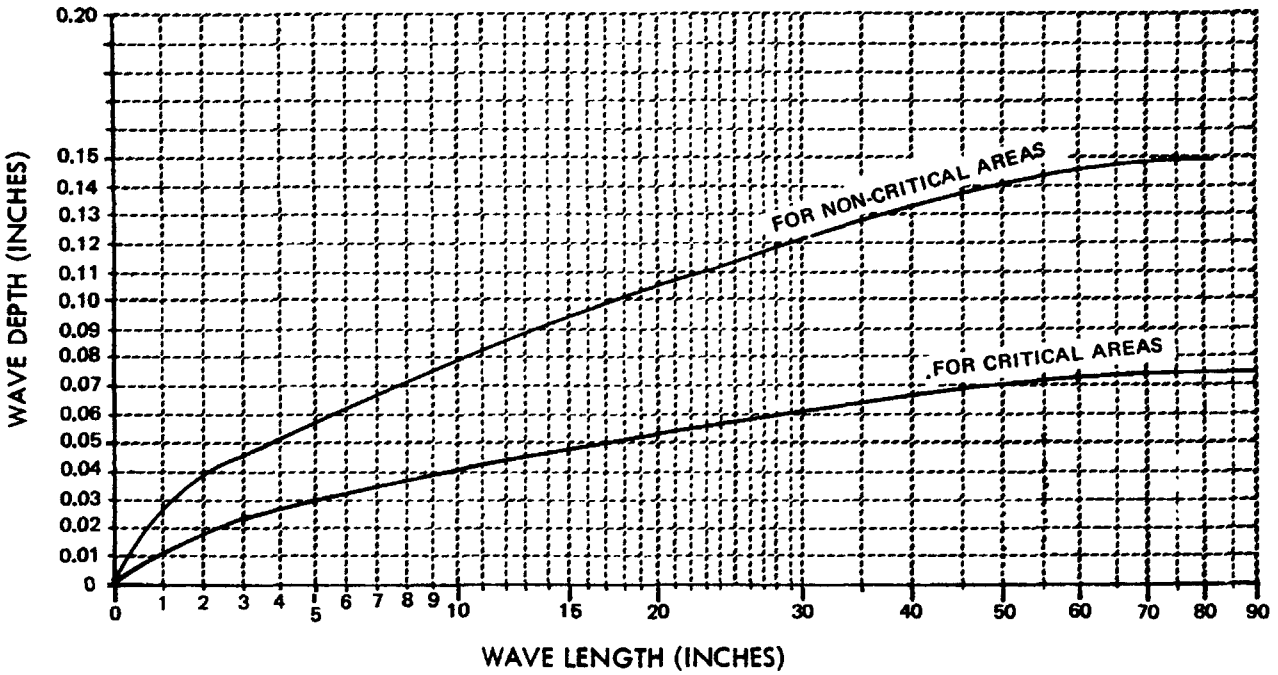


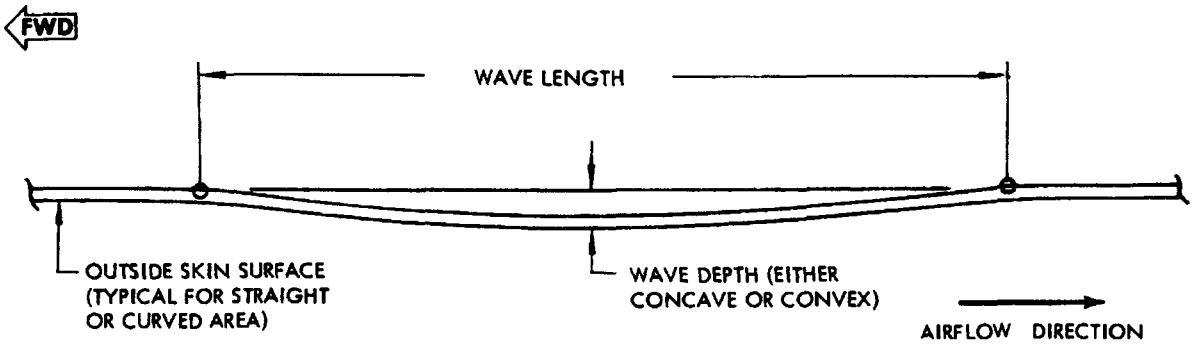


NOTES

- DAMAGE, SUCH AS BLENDOUTS, TRIMOUTS OR DENTS:
  - THAT OCCUR TO A STRUCTURALLY SIGNIFICANT ITEM (SSI) GIVEN IN SRM 51-00-4, FIG. 3 AND,
  - THAT ARE WITHIN THE ALLOWABLE DAMAGE LIMITS OF THE BOEING SRM,

  DO NOT HAVE AN EFFECT ON THE DAMAGE TOLERANCE PROPERTIES OF THE SSI. THEREFORE, EXISTING SUPPLEMENTAL STRUCTURAL INSPECTION DOCUMENT (SSID) INSPECTION PROGRAMS REMAIN EFFECTIVE.
- AERODYNAMIC SKIN SMOOTHNESS REQUIREMENT OVER CONTINUOUS SKIN FOR OPTIMUM PERFORMANCE OF A PRODUCTION AIRPLANE IS INDICATED BY THE LIMITS SHOWN ON THE CURVES. SEE 51-70 FOR ILLUSTRATION OF CRITICAL AERODYNAMIC AREAS.
- IF A DENT EXCEEDS THE LIMITS OF THE CURVES AND THERE IS NO EVIDENCE OF SHEARED OR LOOSE FASTENERS OR ELONGATED HOLES IN THE DENT AREA AND IT IS NOT POSSIBLE TO MAKE AN IMMEDIATE REPAIR, THEN PERIODICALLY EXAMINE THE DENT FOR POSSIBLE DEVELOPMENT OF FATIGUE CRACKS.

  CAUTION: DO NOT FILL DENTS WHICH EXCEED THE ABOVE LIMITS SHOWN ON THE CURVES.

  SKIN REPAIRS MUST BE MADE IF FATIGUE CRACKS DEVELOP IN THE DENT AREA.

Vertical Stabilizer Skin Dent Limits
Figure 2


BOEING PROPRIETARY - Copyright © - Unpublished Work - See title page for details.

## NOTES

- DAMAGE, SUCH AS BLENDOUTS, TRIMOUTS OR DENTS:
  - THAT OCCUR TO A STRUCTURALLY SIGNIFICANT ITEM (SSI) GIVEN IN SRM 51-00-4, FIG. 3 AND,
  - THAT ARE WITHIN THE ALLOWABLE DAMAGE LIMITS OF THE BOEING SRM,

  DO NOT HAVE AN EFFECT ON THE DAMAGE TOLERANCE PROPERTIES OF THE SSI. THEREFORE, EXISTING SUPPLEMENTAL STRUCTURAL INSPECTION DOCUMENT (SSID) INSPECTION PROGRAMS REMAIN EFFECTIVE.
- ALL CORROSION MUST BE CLEANED UP AS SHOWN IN DETAIL I. THE DEPTH AFTER CLEANUP MUST MUST NOT BE MORE THAN 10% OF THE THICKNESS OF SKIN PLUS BONDED DOUBLER (IF ANY), UP TO A MAXIMUM OF 0.025 INCH. REPORT LOCATION AND AMOUNT OF CORROSION IN EXCESS OF THE ABOVE LIMITS TO THE BOEING COMPANY.
- WHERE CORROSION CLEANUP GOES OVER COUNTERSUNK RIVET HEADS NOT MORE THAN 0.006 INCH MAY BE REMOVED FROM THE HEAD THICKNESS.
- WHERE COUNTERSUNK FASTENERS ARE REMOVED AND REPLACED WITH FASTENERS OF A LARGER SIZE, THE COUNTERSINK DEPTH MUST NOT EXCEED 80% OF THE THICKNESS OF SKIN AND BONDED DOUBLER IF ANY. IF THIS RESULTS IN HEAD PROTRUSION SHAVE THE HEAD (0.006 MAX) OR INSTALL UNIVERSAL HEAD RIVETS AS FOLLOWS:

| EXISTING RIVET | REPLACEMENT RIVET |
|---|---|
| BACR15CE5D | BACR15ET7AD |
| BACR15CE6D | BACR15BB8AD |

- SKIN RIVETS REMOVED FOR CORROSION CLEANUP MAY BE REPLACED WITH NAS1398D OR NAS1399D BLIND RIVETS OF THE APPROPRIATE SIZE.

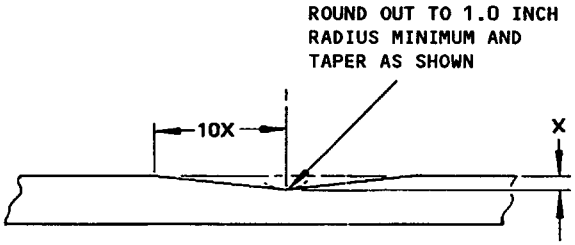


X = DEPTH OF CORROSION AFTER CLEAN-UP

SECTION THROUGH SKIN
DETAIL I

Allowable Corrosion Damage to Vertical Stabilizer Skin
Figure 3


BOEING PROPRIETARY - Copyright © - Unpublished Work - See title page for details.

## DAMAGE CLEANUP

A. For slight erosion of leading edges of horizontal stabilizer the operator may choose to repair the affected areas as follows:

WARNING: CLEANING AND COATING MATERIALS ARE TOXIC AND FLAMMABLE. USE ADEQUATE VENTILATION AND PROPER FIRE PRECAUTIONS.

1. Mask the unaffected areas.
2. Clean the surface with cheesecloth moistened with MEK or water.
3. Polish or sand the affected area to a smooth surface and to a depth not to exceed 25% of the original skin thickness.

   NOTE: Use aluminum oxide abrasives or aluminum wool. Do not use silicon carbide abrasives or steel wool.

4. Blend the depressions into the surrounding area using powdered household cleanser or 400 grit aluminum oxide paper. Refer to section A-A for blending requirements.
5. Wipe area clean using clean cheesecloth moistened with MEK or MIBK.
6. Determine the depth of material removed by the use of a Vidigage, Branson digital caliper, dial gage or straight edge and feeler gages, whichever method is most suitable. If the amount of material removed exceeds 25% of the original skin thickness, contact The Boeing Company for instructions. If the amount of material removed does not exceed 25% of the original skin thickness, apply Alodine 1000 to the repaired surfaces as given in SRM 51-10-2, allow to cure for at least 8 hours at 70-75°F and a relative humidity of 40-50%, and return the airplane to service.

   NOTE: See Fig. 1 for allowable damage limits for other types of damage.

B. For additional protection against erosion of leading edges of horizontal stabilizer, especially where erosion is moderate to severe, the leading edges may be refinished with Astrocoat which canbe replaced when it becomes eroded. Cleanup of eroded areas using an abrasive blast, which provides for minimum removal of metal, is recommended.

1. Mask unaffected areas and close off and seal openings to prevent entry of foreign matter.
2. Static ground both the airplane and the abrasive blast equipment.
3. Spray clean the eroded area with water, MEK, or toluene. If an eroded protective coating is to be replaced, soak the coating beneath cheesecloth saturated with MEK or MIBK until coating is sufficiently soft and remove with a plastic scraper.
4. Abrasive blast the eroded area as given in SRM 51-10-6, ensuring that all of the oxide and/or corrosion have been removed from the eroded area.

   CAUTION: DO NOT USE CHEESECLOTH OR ANY OTHER FABRIC TO CLEAN THE BLASTED AREA. LINT DEPOSITED ON BLASTED AREA WHEN COVERED WITH ASTROCOAT SHORTENS THE LIFE OF ASTROCOAT.

5. Determine the depth of material removed. If the amount of material removed exceeds 25% of the original skin thickness, contact the Boeing Company for instructions. If the amount of material removed does not exceed 25% of the original skin thickness, apply Alodine 1200 with nylon brush. Do not use cheesecloth or any other fabric.
6. Spray clean with MEK or water.

   NOTE: If the metal had been sanded and it remains smooth, the area may be wiped clean with MEK and cheesecloth.

7. Apply Astrocoat as given in SRM 51-20-5, ensuring that the full thickness of Astrocoat completely covers the area subjected to erosion.
8. Restore original finish after the Astrocoat has dried 1 hour at 70°-75°F and a relative humidity of 40-50%.
9. After the final application, cure as shown in Fig. 1 of SRM 51-20-5 before returning airplane to service.

## NOTES

- THE ALLOWABLE DAMAGE LIMITS GIVEN IN THIS FIGURE WILL NOT HAVE AN EFFECT ON A STRUCTURALLY SIGNIFICANT ITEM (SSI) GIVEN IN SRM 51-00-4, FIG. 3. THUS, NO CHANGE TO THE SUPPLEMENTAL STRUCTURAL INSPECTION DOCUMENT (SSID) INSPECTION PROGRAM IS NECESSARY.

Allowable Erosion Damage - Leading Edge of Vertical Stabilizer
Figure 4 (Sheet 1)


BOEING PROPRIETARY - Copyright © - Unpublished Work - See title page for details.

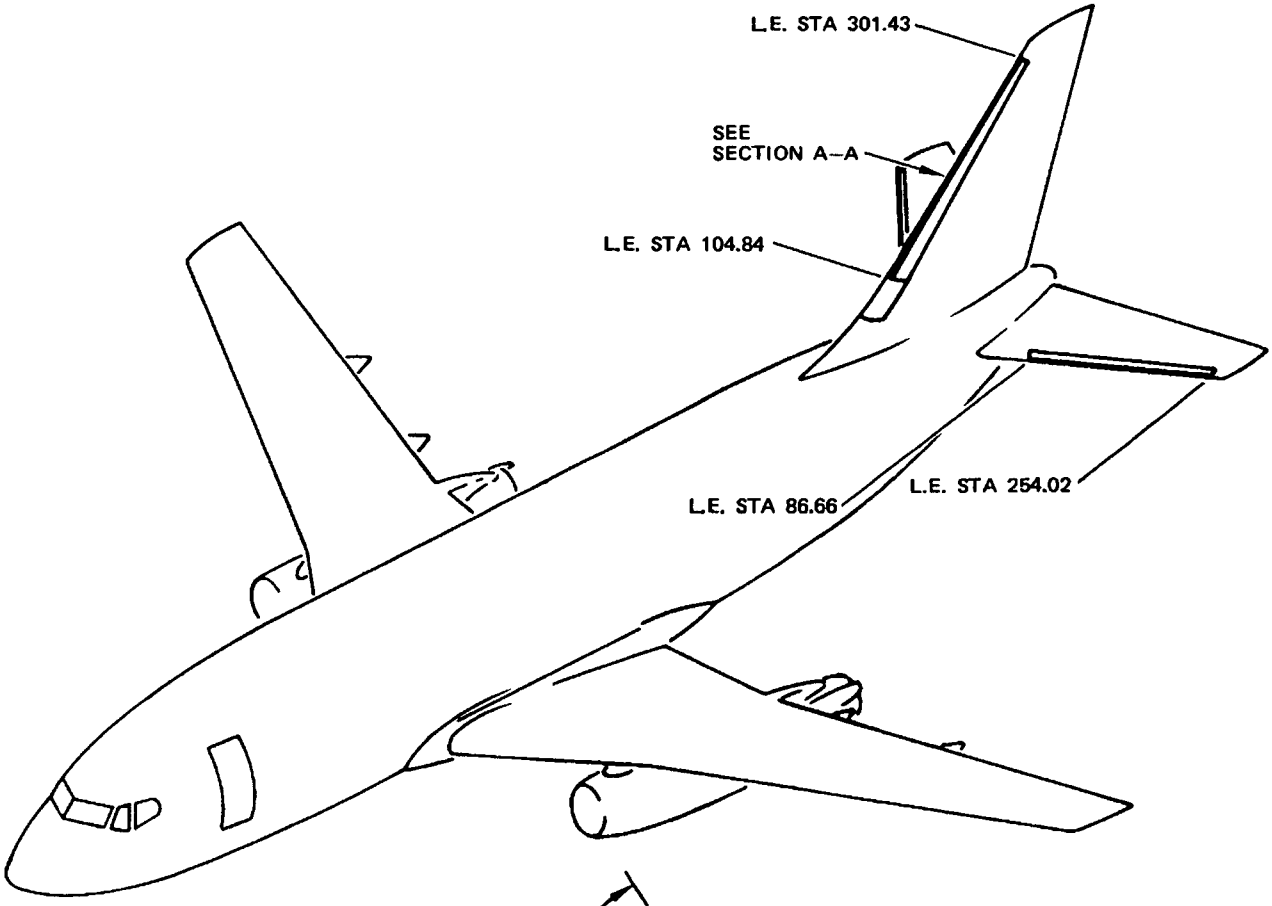


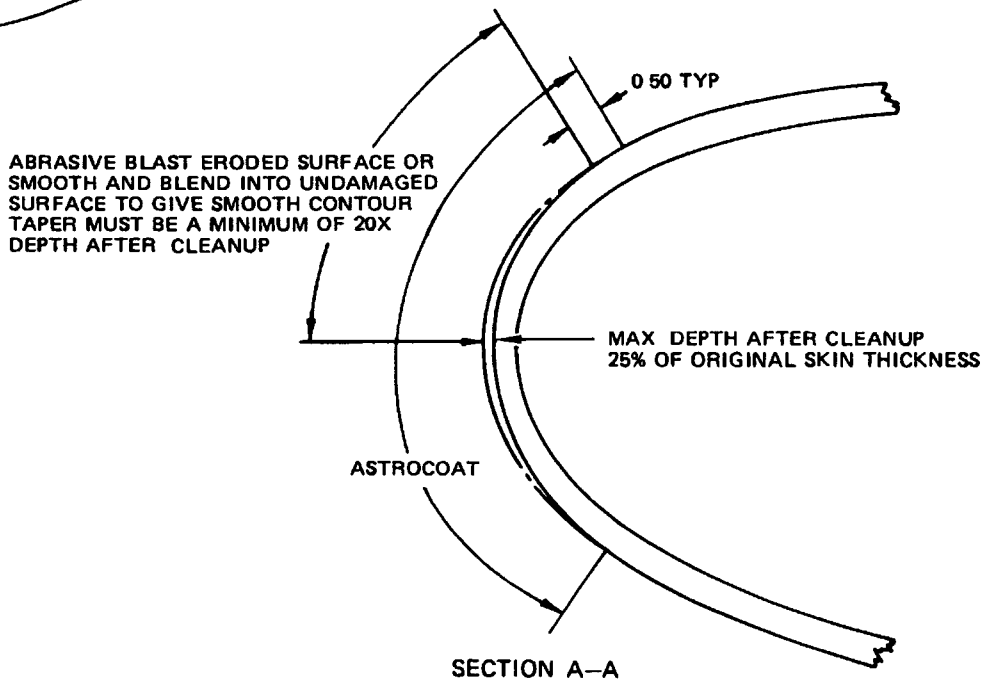


Allowable Erosion Damage – Leading Edge of Vertical Stabilizer
Figure 4 (Sheet 2)


BOEING PROPRIETARY – Copyright © – Unpublished Work – See title page for details.

NOTES

- THE ALLOWABLE DAMAGE LIMITS GIVEN IN THIS FIGURE WILL NOT HAVE AN EFFECT ON A STRUCTURALLY SIGNIFICANT ITEM (SSI) GIVEN IN SRM 51-00-4, FIG. 3. THUS, NO CHANGE TO THE SUPPLEMENTAL STRUCTURAL INSPECTION PROGRAM IS NECESSARY.

[A] REFER TO SRM 55-30-2 FOR EFFECTIVITY OF GLASS/ARAMID/GRAPHITE/EPOXY COMPOSITE PANELS.

[B] REFER TO TABLE I FOR ALLOWABLE DAMAGE DATA.

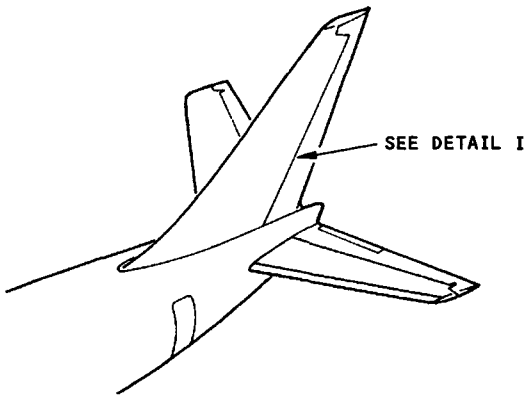


Allowable Damage to Vertical Stabilizer Glass/Aramid/
Graphite/Epoxy Composite Trailing Edge Panels
Figure 5 (Sheet 1)


BOEING PROPRIETARY - Copyright © - Unpublished Work - See title page for details.

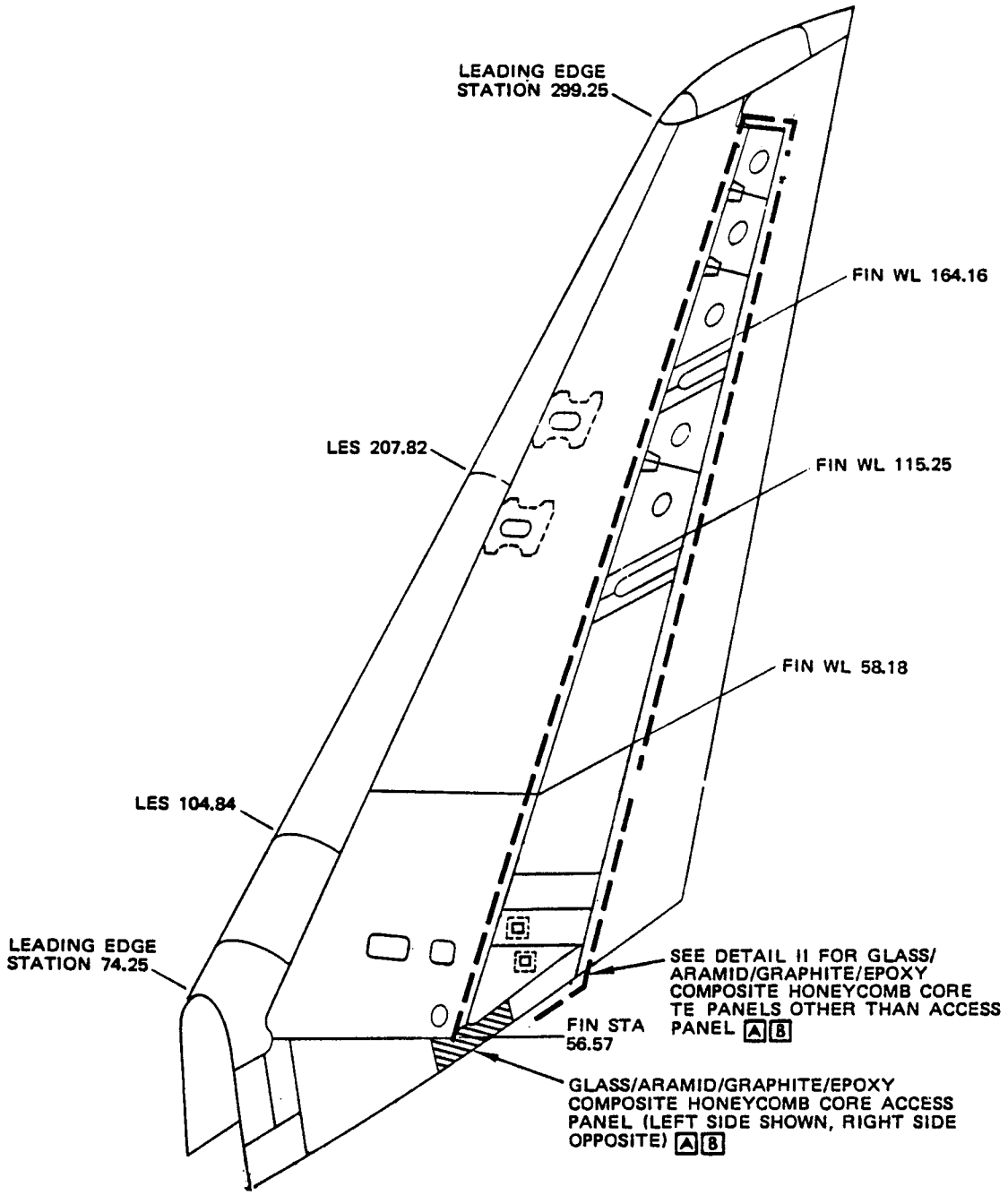


DETAIL I

Allowable Damage to Vertical Stabilizer Glass/Aramid/Graphite/Epoxy Composite Trailing Edge Panels
Figure 5 (Sheet 2)

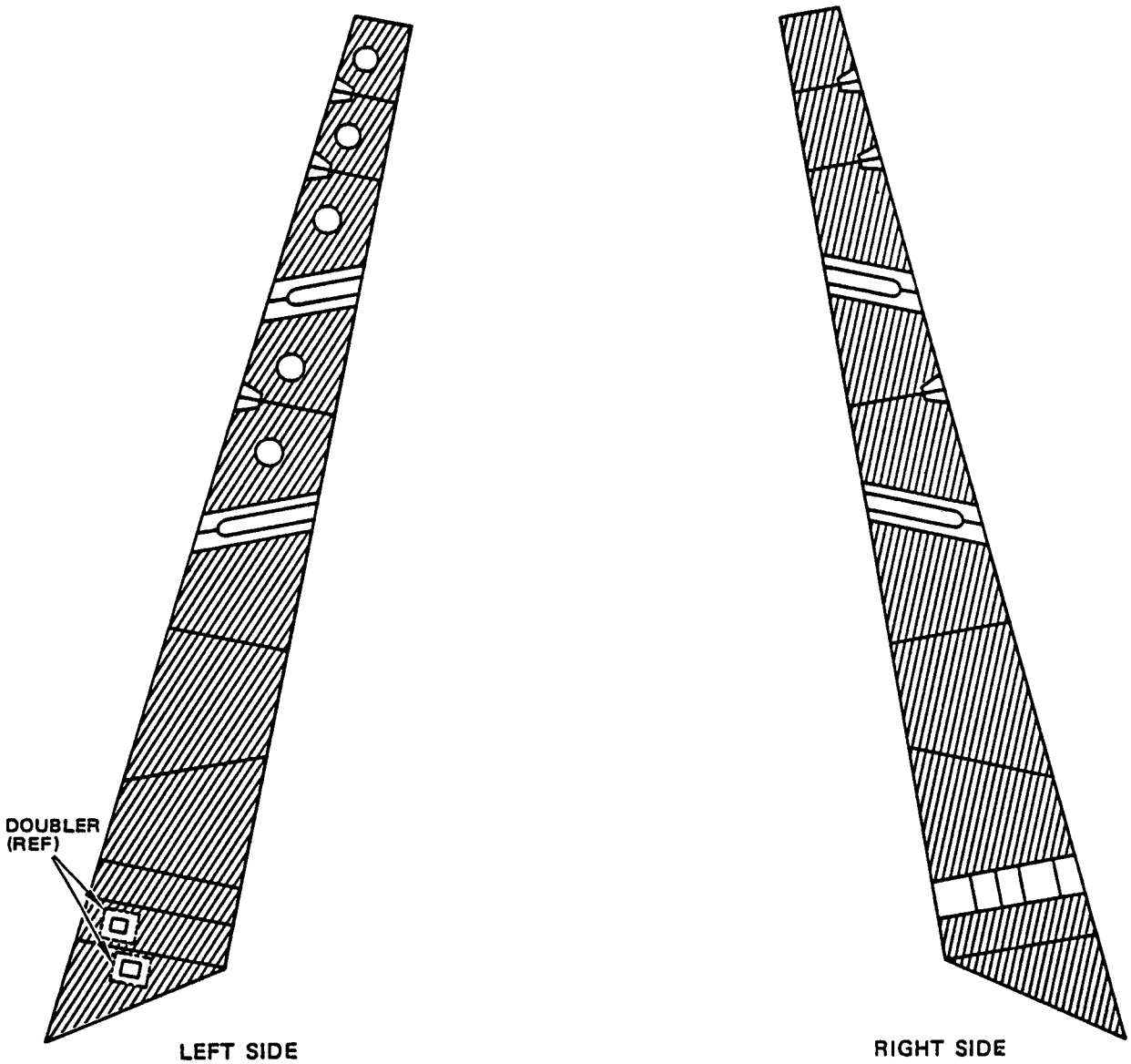


DETAIL II A B

Allowable Damage to Vertical Stabilizer Glass/Aramid/Graphite/Epoxy
Composite Trailing Edge Panels
Figure 5 (Sheet 3)

| DESCRIPTION | CRACKS | NICKS, GOUGES, AND SCRATCHES | DENTS | HOLES AND PUNCTURES | DELAMINATION |
|---|---|---|---|---|---|
| TRAILING EDGE PANELS | D | E | F | G | H |

TABLE I

NOTES

- D = MAXIMUM DAMAGE DIMENSION
- REFINISH REWORKED AREA PER 51-20 OF THE MAINTENANCE MANUAL
- REFER TO 51-70 FOR AERODYNAMIC SMOOTHNESS REQUIREMENTS. WHERE THE DAMAGE EXCEEDS THE LIMITS SHOWN IN 51-70 CONSIDERATION SHOULD BE GIVEN TO THE LOSS OF PERFORMANCE INVOLVED
- TYPICAL DAMAGE TO A PANEL EDGEBAND MAY CONSIST OF EDGE CRUSHING, CRACKS OR DELAMINATION. DAMAGE AROUND HOLES MAY CONSIST OF OVALIZATION, FASTENER PULL-THROUGH OR CRACKS OUT OF HOLE. DAMAGE MAY REDUCE THE EFFECTIVE CROSS SECTIONAL AREA OF AN EDGEBAND. DAMAGE TO EDGES SHOULD BE BLENDED OUT TO LIMITATIONS GIVEN FOR COMPONENT
- REFER TO 51-40 FOR INVESTIGATION AND CLEANUP OF DAMAGE

C PROTECT DAMAGE FROM ENTRANCE OF WATER, SUNLIGHT OR OTHER FOREIGN MATTER BY SEALING WITH ALUMINUM FOIL TAPE (SPEED TAPE) 3M-Y436, OR EQUIVALENT. RECORD LOCATION AND INSPECT AT AIRPLANE "A" CHECK. REPLACE ALUMINUM FOIL TAPE IF ANY PEELING OR DETERIORATION OF TAPE IS EVIDENT. REPAIR DAMAGE PER REPAIR TABLES IN 55-30-3 NO LATER THAN THE NEXT "C" CHECK

D CLEAN UP EDGE CRACKS PER DETAIL III, NOT MORE THAN ONE FASTENER HOLE IN SIX MAY BE CRACKED OR DAMAGED. DAMAGE MUST NOT EXCEED 10% OF EDGEBAND LENGTH PER SIDE. 1.50 MAX DIMENSION (D) IN HONEYCOMB AREA IS ALLOWED PER SQUARE FOOT OF AREA AND A MINIMUM OF 4D (EDGE TO EDGE) FROM ANY OTHER DAMAGE, FASTENER HOLE OR PANEL EDGE C

E IF FIBERS ARE DAMAGED, TREAT AS A CRACK. IF FIBERS ARE NOT DAMAGED PROTECT PER NOTE C

Allowable Damage to Vertical Stabilizer Glass/Aramid/
Graphite/Epoxy Composite Trailing Edge Panels
Figure 5 (Sheet 4)

[F] DENTS GENERALLY RESULT IN FIBER DAMAGE OR DELAMINATION WHICH MAY NOT BE APPARENT USING VISUAL OR TAP TESTING METHODS OF DETECTION. DENTS UP TO 1.5-INCH DIAMETER MAXIMUM (D) ARE ALLOWED WHICH MUST BE A MINIMUM OF 4D (EDGE TO EDGE) FROM ANY OTHER DAMAGE, FASTENER HOLE OR PART EDGE. TREAT PER NOTE [C] . IF FIBER DAMAGE OR DELAMINATION IS DETECTED REFER TO APPLICABLE DAMAGE DATA IN TABLE [C]

[G] 1.50 MAX DIMENSION (D) IN HONEYCOMB AREA IS ALLOWED PER SQUARE FOOT OF AREA AND A MINIMUM OF 4D (EDGE TO EDGE) FROM ANY OTHER DAMAGE, FASTENER HOLE OR PANEL EDGE. DO NOT CLEAN UP DAMAGE EXCEPT TO REMOVE RESIN BURRS EXTENDING INTO SURFACE CONTOUR [C]

[H] 1.50 MAX DIMENSION (D) IN HONEYCOMB AREA IS ALLOWED PER SQUARE FOOT OF AREA AND A MINIMUM OF 4D (EDGE TO EDGE) FROM ANY OTHER DAMAGE, FASTENER HOLE OR PANEL EDGE. A MAXIMUM OF 0.10 DELAMINATION FROM EDGE IS ALLOWED. PROTECT EDGE DAMAGE PER [C]

Allowable Damage to Vertical Stabilizer Glass/Aramid/
Graphite/Epoxy Composite Trailing Edge Panels
Figure 5 (Sheet 5)

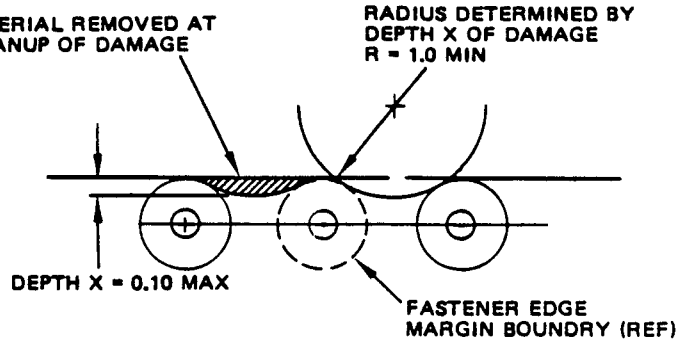


DAMAGE CLEANUP OF EDGES WHERE
FASTENER EDGE MARGINS DO NOT OVERLAP

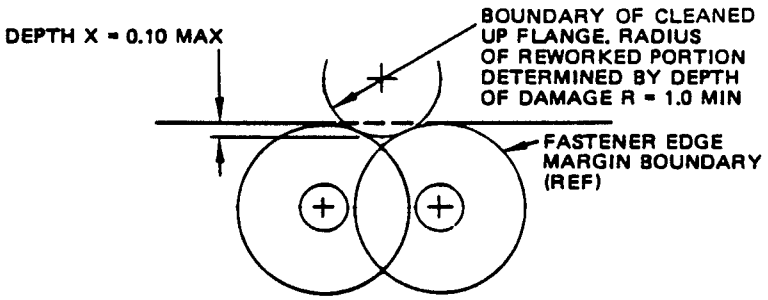


DAMAGE CLEANUP OF EDGES WHERE
FASTENER EDGE MARGINS OVERLAP

DETAIL III

Allowable Damage to Vertical Stabilizer Glass/Aramid/Graphite/Epoxy
Composite Trailing Edge Panels
Figure 5 (Sheet 6)

NOTES

[A] FOR CUM LINE NUMBERS: 1 THRU 11, 15

[B] FOR CUM LINE NUMBERS: 12 THRU 14, 16 AND ON

[C] FOR CUM LINE NUMBERS: 1 THRU 143

[D] FOR CUM LINE NUMBERS: 144 AND ON NOT LISTED IN

[E] FOR AIRPLANES WITH 3-BALANCE ARM RUDDERS

[F] FOR AIRPLANES MANUFACTURED WITH 2-BALANCE ARM RUDDERS AND THOSE WITH SB 55-1010 INCORPORATED

[G] FOR AIRPLANES WITH FLUSH MOUNTED HF ANTENNA

[H] FOR CUM LINE NUMBERS: 1000 AND ON

[I] FOR CUM LINE NUMBERS: 1016 AND ON

[J] FOR CUM LINE NUMBERS: 1197 THRU 1585 (BOEING REF: P4354 THRU P4399, P4801 THRU P5499, P8979 THRU P9995)

| SKIN REPAIR INDEX | |
|---|---|
| LOCATION OF DAMAGE | REPAIR FIG. NO. |
| INTERSPAR SKIN | 55-30-3 FIG. 1, 2 |
| LEADING EDGE SKIN | 55-30-6 FIG. 1, 2 |

[K] PLY ORIENTATION CONVENTION: THE PLY ORIENTATION OF EACH PLY IS DESIGNATED BY A NUMBER (IN DEGREES) REPRESENTING THE ORIENTATION OF THE AXIS PARALLEL TO THE DIRECTION OF FILAMENTS (IN TAPE) OR LONGITUDINALLY ORIENTED YARN (IN A WOVEN FABRIC) WITH RESPECT TO A REFERENCE AXIS. 0 DEGREES IS THE REFERENCE AXIS. THE DIRECTION OF LONGITUDNAL YARN IN A WOVEN FABRIC IS CALLED THE WARP DIRECTION

[L] MATERIAL AND PLY ORIENTATION ARE ALWAYS SHOWN FOR FIELD AREAS. SEE BOEING DRAWINGS FOR EDGE BANDS AND AREAS WITH DOUBLERS WHENEVER THEY ARE NOT SHOWN IN THE MANUAL AS ADJUNCTS TO FIELD AREAS

[M] CORE RIBBON DIRECTION-TYPICAL EXCEPT AS NOTED

[N] PREPREG GLASS FABRIC PER BMS 8-79 CLASS III, GRADE 1, TYPE 120 (TYPE 181 OPT)

[O] PREPREG ARAMID FABRIC PER BMS 8-219 TYPE 285

[P] PREPREG GRAPHITE TAPE PER BMS 8-168 TYPE II, CLASS 1, GRADE 145

[Q] PREPREG ARAMID FABRIC PER BMS 8-219 STYLE 120

[R] PREPREG GLASS FABRIC PER BMS 8-79 CLASS III, GRADE 1, TYPE 120

[S] CORE RIBBON DIRECTION SAME FOR GLASS 1 EPOXY HONEYCOMB PANEL

Vertical Stabilizer Skin Identification
Figure 1 (Sheet 1)

[T] PREPREG GRAPHITE TAPE PER BMS 8-168 TYPE II CLASS 1 GRADE 145

[U] UNIDRECTIONAL PLY LAYUP

[V] WRAP DIRECTIONS ALTERNATE BETWEEN 0° AND 90°

[W] FOR AIRPLANES NOT LISTED IN [H]

[X] FOR CUM LINE NOS. 1010 AND ON

[Y] FOR AIRPLANES NOT IN [X]

Vertical Stabilizer Skin Identification
Figure 1 (Sheet 2)

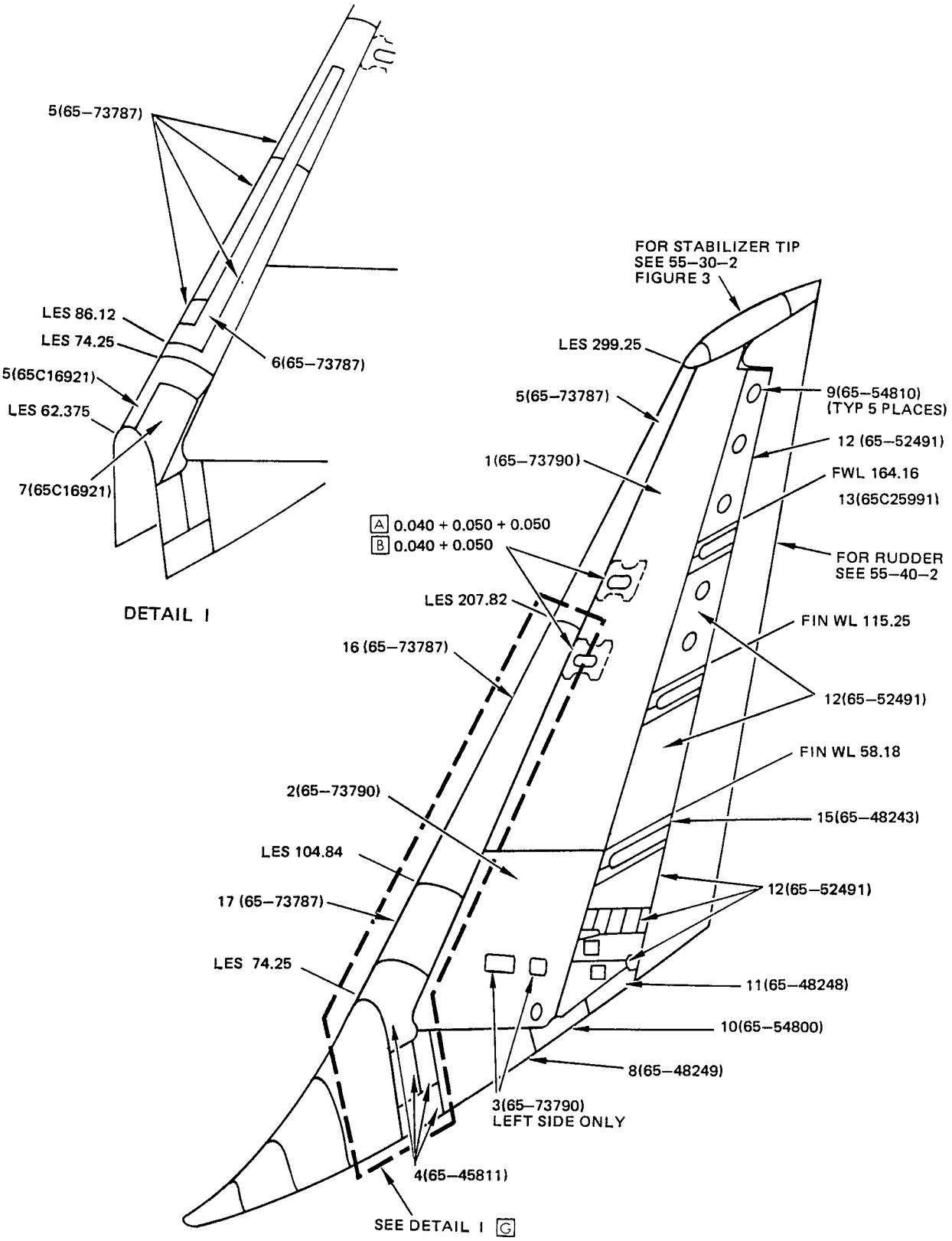


Vertical Stabilizer Skin Identification
Figure 1 (Sheet 3)

| ITEM | DESCRIPTION | GAGE | MATERIAL | EFFECTIVITY |
|---|---|---|---|---|
| 1 | INTERSPAR SKIN-UPR | 0-032 | CLAD 2024-T3 | D |
| | SKIN | 0.040 | CLAD 2024-T3 | C |
| | DOUBLERS | 0.010 | CLAD 2024-T3 | |
| | SKIN-CHEM MILLED | 0.050 | CLAD 2024-T3 | J |
| 2 | INTERSPAR SKIN-LWR | 0.040 | CLAD 2024-T3 | |
| | DOUBLER-LWR, AFT | 0.020 | CLAD 2024-T3 | |
| | DOUBLER-FWD | 0.010 | CLAD 2024-T3 | |
| 3 | DOUBLER | 0.040 | CLAD 2024-T3 | |
| 4 | LE SKIN-BONDED | 0.040 | CLAD 2024-T3 | |
| | FILLER | 0.050 | CLAD 2024-T3 | |
| 5 | LE SKIN - UPR | 0.040 | CLAD 2024-T3 | |
| | DOUBLERS | 0.063 | CLAD 2024-T3 | |
| 6 | LAMINATE | | PREPREG GLASS FABRIC PER BMS 8-79, TYPE 181 | G |
| 7 | DOOR | | | G |
| | SKIN | 0.040 | CLAD 2024-T3 | |
| | DOUBLER | 0.063 | CLAD 2024-T3 | |
| 8 | FWD PANEL | | GLASS/EPOXY OR ARAMID/ GRAPHITE/EPOXY HONEY-COMB SANDWICH | |
| | SKIN | | PREPREG GLASS FABRIC PER BMS 8-79 CLASS 1 TYPE 120 | W |
| | SKIN | | SEE DETAIL II U | H |
| | CORE | | NON METALLIC HONEYCOMB PER BMS 8-124 CLASS 4, TYPE 5, GRADE 3.0 | |
| 9 | ACCESS DOOR | 0.10 | CLAD 2024-T3 | |
| 10 | DOOR | | ALUMINUM OR GRAPHITE/ ARAMID EPOXY HONEYCOMB SANDWICH | |
| | SKIN | 0.050 | CLAD 2024-T42 | Y |
| | DOUBLER | 0.040 | CLAD 2024-T42 | Y |
| | SKIN | | SEE DETAIL III | X |
| | CORE | | NON METALLIC HONEYCOMB PER BMS 8-124 CLASS 4, TYPE IV GRADE 3.0 | |

Vertical Stabilizer Skin Identification
Figure 1 (Sheet 4)

| ITEM | DESCRIPTION | GAGE | MATERIAL | EFFECTIVITY |
|---|---|---|---|---|
| 11 | AFT PANEL | | GLASS/EPOXY HONEYCOMB SANDWICH OR ARAMID/ GRAPHITE/EPOXY HONEYCOMB SANDWICH | |
| | SKIN | | SEE DETAIL IV | H |
| | CORE | | NON METALLIC HONEYCOMB PER BMS 8-124 CLASS IV, TYPE V, GRADE 3.0 | |
| | SKIN | | PRE-PREG GLASS FABRIC PER BMS 8-79 CLASS 1 TYPE 120 U | W |
| 12 | TE PANEL | | GLASS EPOXY OR GRAPHITE/ARAMID/EPOXY HONEYCOMB SANDWICH | |
| | SKIN | | PREPREG GLASS FABRIC PER BMS 8-79 CLASS 1, TYPE 120 | W |
| | SKIN | | SEE DETAIL V | H |
| | CORE | | NON METALLIC HONEYCOMB CORE PER BMS 8-124 CLASS 4, TYPE 5, GRADE 3.0 | |
| 13 | COVER ASSY | 0.050 | CLAD 2024-T3 | |
| | SKIN | | | |
| | DOUBLER | | LAMINATED PHENOLIC SHT | |
| 14 | SEAL | | PREPREG GLASS FABRIC PER BMS 8-79, TYPE 1, CLASS 1 WRAP DIRECTION GTP. | |
| 15 | SEAL | | PREPREG GLASS FABRIC PER BMS 8-79, TYPE 1, CLASS 1 WRAP DIRECTION GTP. | |
| 16 | LE SKIN - MID | 0.040 | CLAD 2024-T42 | |
| | DOUBLERS | 0.063 | CLAD 2024-T3 | |
| 17 | LE SKIN - LWR | 0.040 | CLAD 2024-T3 | |
| | DOUBLER - LH | 0.063 | CLAD 2024-T3 | |
| | DOUBLER - RH | 0.063 | CLAD 2024-T3 | |
| | DOUBLER - LWR | 0.063 | CLAD 2024-T42 | |

Vertical Stabilizer Skin Identification
Figure 1 (Sheet 4)

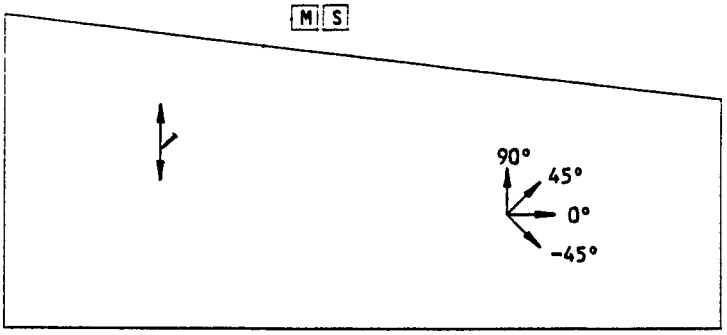


VIEW ON FWD PANEL K

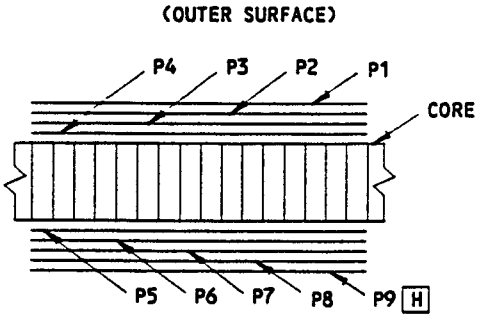


SECTION THRU HONEYCOMB PANEL

| ITEM | PLY NO. | MATERIAL | PLY ORIENTATION |
|---|---|---|---|
| 8 | P1,P8,P9 | R | 0° OR 90° |
| | P2 | O | ± 45° |
| | P3,P6 | P | 90° |
| | P4,P5 | O | 0° OR 90° |
| | P7 | Q | ± 45° |

PLY TABLE FOR FWD PANEL L

DETAIL II

Vertical Stabilizer Skin Identification
Figure 1 (Sheet 5)

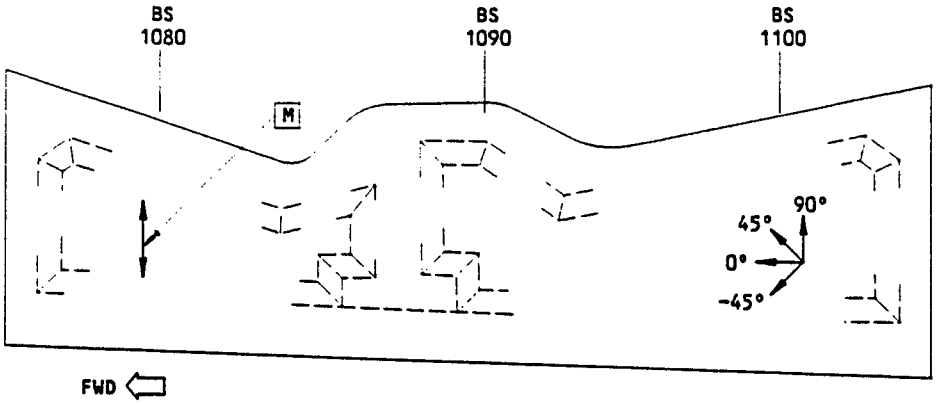


SIDE VIEW OF DOOR K

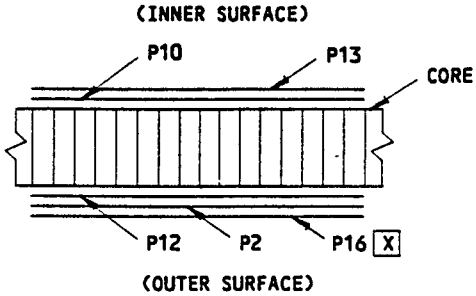


SECTION THRU HONEYCOMB PANEL

| ITEM | PLY NO. | MATERIAL | PLY ORIENTATION |
|---|---|---|---|
| 10 | P2,P10 | O | ± 45° |
| | P12,P13 | T | 0° OR 90° |
| | P16 | R | 0° OR 90° |

PLY TABLE FOR DOOR L

DETAIL III

Vertical Stabilizer Skin Identification
Figure 1 (Sheet 6)

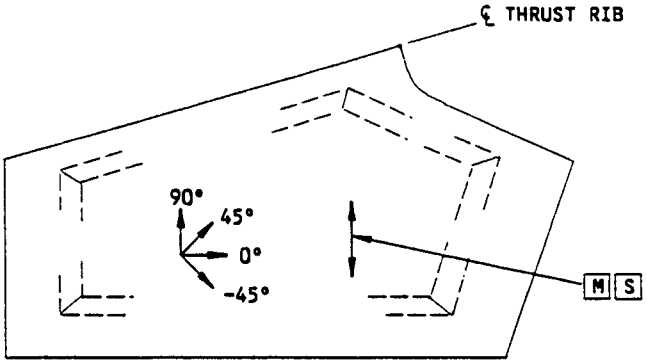


VIEW ON AFT PANEL K

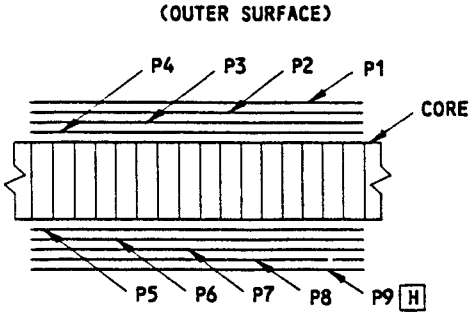


SECTION THRU HONEYCOMB PANEL

| ITEM | PLY NO. | MATERIAL | PLY ORIENTATION |
|---|---|---|---|
| 8 | P1,P8,P9 | N | 0° OR 90° |
| | P2 | O | ± 45° |
| | P3,P6 | P | 90° |
| | P4,P5 | O | 0° OR 90° |
| | P7 | Q | ± 45° |

PLY TABLE FOR AFT PANEL L

DETAIL IV

Vertical Stabilizer Skin Identification
Figure 1 (Sheet 7)

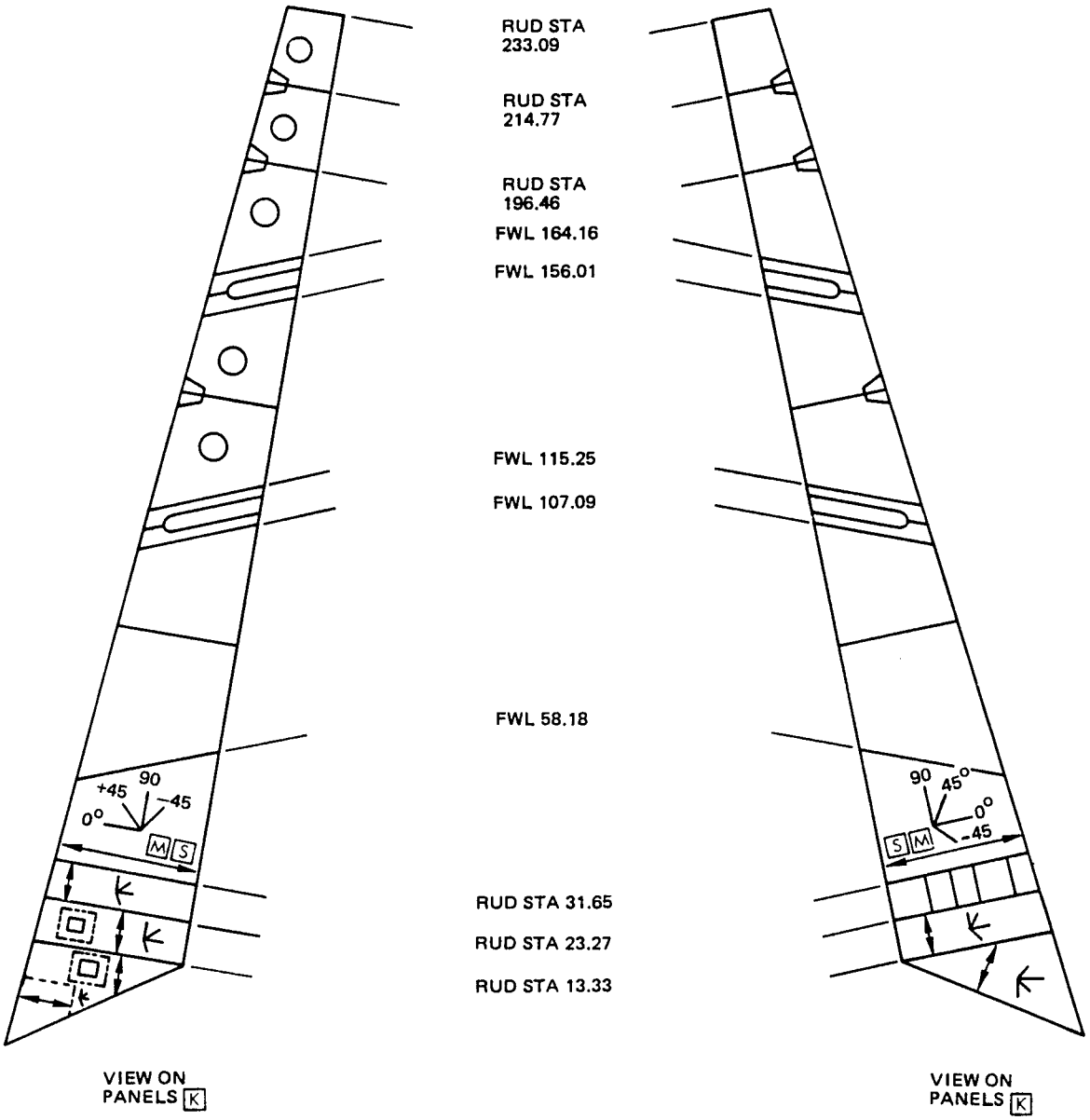


LEFT SIDE

TRAILING EDGE PANEL
DETAIL V

RIGHT SIDE

Vertical Stabilizer Skin Identification
Figure 1 (Sheet 8)

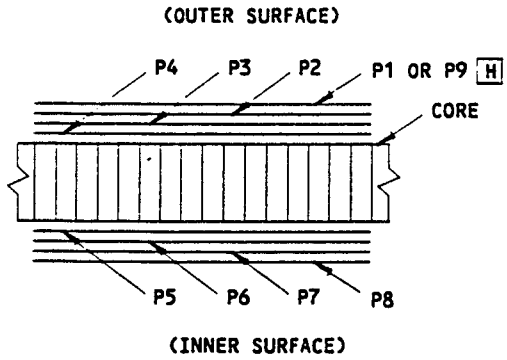


SECTION THRU FIELD AREA

| ITEM | PLY NO. | MATERIAL | PLY ORIENTATION |
|---|---|---|---|
| | P1,P8,P9 | N | 0° OR 90° |
| | P2 | O | ± 45° |
| | P3,P6 | P | 90° |
| | P4,P5 | O | 0° OR 90° |
| | P7 | Q | ± 45° |

PLY TABLE FOR PANELS L

DETAIL V (CONT)

Vertical Stabilizer Skin Identification
Figure 1 (Sheet 9)

| ITEM | CHORDS | | WEB | |
|---|---|---|---|---|
| | MATERIAL | REPAIR FIG. NO. | MATERIAL | REPAIR FIG. NO. |
| 1 | 0.050 CLAD 7075-T6 | | 0.040 CLAD 2024-T3 | |
| 2 | FIBERGLASS CLOTH REINFORCED PLASTIC | | 0.040 CLAD 2024-T3 | |
| 3 | BAC1506-1058 2024-T42 | | 0.032 CLAD 2024-T3 | |
| 4 | BAC1505-100583 7075-T6 | 55-30-4 FIG. 1 | 0.025 CLAD 2024-T3 | 55-30-4 FIG. 2 |
| 5 | BAC1503-100235 7075-T6 | 55-30-4 FIG. 1 | 0.025 CLAD 2024-T42 | 55-30-4 FIG. 2 |
| 6 | BAC1505-100555 7075-T6 | 55-30-4 FIG. 1 | 0.025 CLAD 2024-T42 | 55-30-4 FIG. 2 |
| 7 | BAC1505-100551 7075-T6 | | 0.025 CLAD 2024-T3 | |
| 8 | BAC1506-1869 7075-T6 | | 0.025 CLAD 2024-T3 | |
| 9 | BAC1505-100555 7075-T6 | 55-30-4 FIG. 1 | 0.010 + 0.010 CLAD 2024-T3 | 55-30-4 FIG. 2 |
| 10 | BAC1506-1869 7075-T6 | | 0.010 + 0.010 CLAD 2024-T3 | |
| 11 | BAC1505-100551 7075-T6 | | 0.012 + 0.012 CLAD 2024-T3 | |
| 12 | BAC1505-100590 7075-T6 | 55-30-4 FIG. 1 | 0.010 + 0.010 CLAD 2024-T3 | 55-30-4 FIG. 2 |
| 13 | BAC1505-100584 7075-T6 | | 0.016 + 0.016 CLAD 2024-T3 | |
| 14 | BAC1505-100569 7075-T6 | 55-30-4 FIG. 1 | 0.012 + 0.012 CLAD 2024-T3 | 55-30-4 FIG. 2 |
| 15 | BAC1514-1750 7075-T6 | | 0.020 + 0.020 CLAD 2024-T3 | |
| 16 | BAC1505-100568 7075-T6 | 55-30-4 FIG. 1 | 0.010 + 0.010 CLAD 2024-T3 | 55-30-4 FIG. 2 |

Vertical Stabilizer Structure Identification
Figure 2 (Sheet 1)

| ITEM | CHORDS | | WEB | |
|---|---|---|---|---|
| | MATERIAL | REPAIR FIG. NO. | MATERIAL | REPAIR FIG. NO. |
| 17 | BAC1505-100584<br>7075-T6 | | 0.020 + 0.020<br>CLAD 2024-T3 | |
| 18 | BAC1506-1832<br>7075-T6 | | 0.040 CLAD<br>7075-T6 | |
| 19 | OUTER<br>BAC1506-1749<br>2024-T3511<br>FAIL SAFE<br>BAC1520-1359<br>7075-T6511 | | UPPER 0.025,<br>CENTER 0.032,<br>LOWER 0.180<br>7075-T6 | |
| 20 | BAC1505-100567<br>7075-T6 | 55-30-4<br>FIG. 1 | FWD 0.010 + 0.010<br>CLAD, AFT 0.010 +<br>0.010 + 0.020<br>CLAD 2024-T3 | 55-30-4<br>FIG. 2 |
| 21 | BAC1506-1747<br>7075-T6 | 55-30-4<br>FIG. 1 | FWD AND AFT<br>0.090, MIDDLE<br>0.050 CLAD<br>7075-T6 | 55-30-4<br>FIG. 2 |
| 22 | BAC1506-1785<br>7075-T6511 | | | |
| 23 | | | 0.050 CLAD<br>2024-T42 | |
| 24 | BAC1503-1430<br>2024-T42 | | 0.010 + 0.010<br>CLAD 2024-T3 | |
| 25 | BAC1505-100579<br>2024-T42 | | 0.010 + 0.010<br>CLAD 2024-T3 | |
| 26 | BAC1506-1904<br>2024-T42 | | 0.016 + 0.016<br>CLAD 2024-T3 | |
| 27 | BAC1506-1840<br>2024-T42 | | 0.010 + 0.010<br>CLAD 2024-T3 | |
| 28 | | | 0.050 CLAD<br>2024-T3 | |
| 29 | BAC1506-1880<br>7075-T6511 | | | |

Vertical Stabilizer Structure Identification
Figure 2 (Sheet 2)

| ITEM | CHORDS | | WEB | |
|---|---|---|---|---|
| | MATERIAL | REPAIR FIG. NO. | MATERIAL | REPAIR FIG. NO. |
| 30 | | | 0.025 CLAD<br>7075-T6 | 55-31-5<br>FIG. 2 |
| 31 | | | 0.032 CLAD<br>7075-T6 | 55-30-5<br>FIG. 2 |
| 32 | | | 0.063 CLAD<br>7075-T6 | 55-30-5<br>FIG. 1 |
| 33 | MACHINED FROM<br>BAC1506-1741<br>7075-T6511 | | 0.063<br>7075-T6 | 55-30-5<br>FIG. 1 |
| 34 | | | TAPERED 0.120 TO 0.036<br>7075-T6 | 55-30-5<br>FIG. 2 |
| 35 | TERMINAL FITTING<br>FORGING<br>7075-T73 | | | |
| 36 | TERMINAL FITTING<br>FORGING<br>7075-T73 | | | |
| 37 | TERMINAL FITTING<br>FORGING 4330 STEEL<br>HT 180-200 KSI | | | |
| 38 | BAC1506-1840<br>2024-T42 | | 0.020 CLAD<br>2024-T3 | |
| 39 | BAC1506-1904<br>2024-T42 | | 0.032 CLAD<br>2024-T3 | |
| 40 | BAC1505-100579<br>2024-T42 | | 0.020 CLAD<br>2024-T3 | |

Vertical Stabilizer Structure Identification
Figure 2 (Sheet 3)

| ITEM | CHORDS | | WEB | |
|---|---|---|---|---|
| | MATERIAL | REPAIR FIG. NO. | MATERIAL | REPAIR FIG. NO. |
| 41 | BAC1503-1420<br>2024-T42 | | 0.020 CLAD<br>2024-T3 | |
| 42 | | | 0.040 CLAD<br>2024-T42 | |
| 43 | | | GLASS FABRIC REINFORCED LAMINATE RIB | |
| 44 | BAC1506-1603<br>7075-T73 | | 0.032 CLAD<br>2024-T42 | |

NOTES

A FOR CUM LINE NUMBERS: 1 THRU 314, 316

B REMOVABLE SPAR WEB

C FOR CUM LINE NUMBERS: 315, 317 AND ON

D FOR AIRPLANES WITH FLUSH MOUNTED HF ANTENNA

E FOR CUM LINE NUMBERS: 205 AND ON

F FOR CUM LINE NUMBERS: 1 THRU 204

Vertical Stabilizer Structure Identification
Figure 2 (Sheet 4)

REF DWG
65-73790

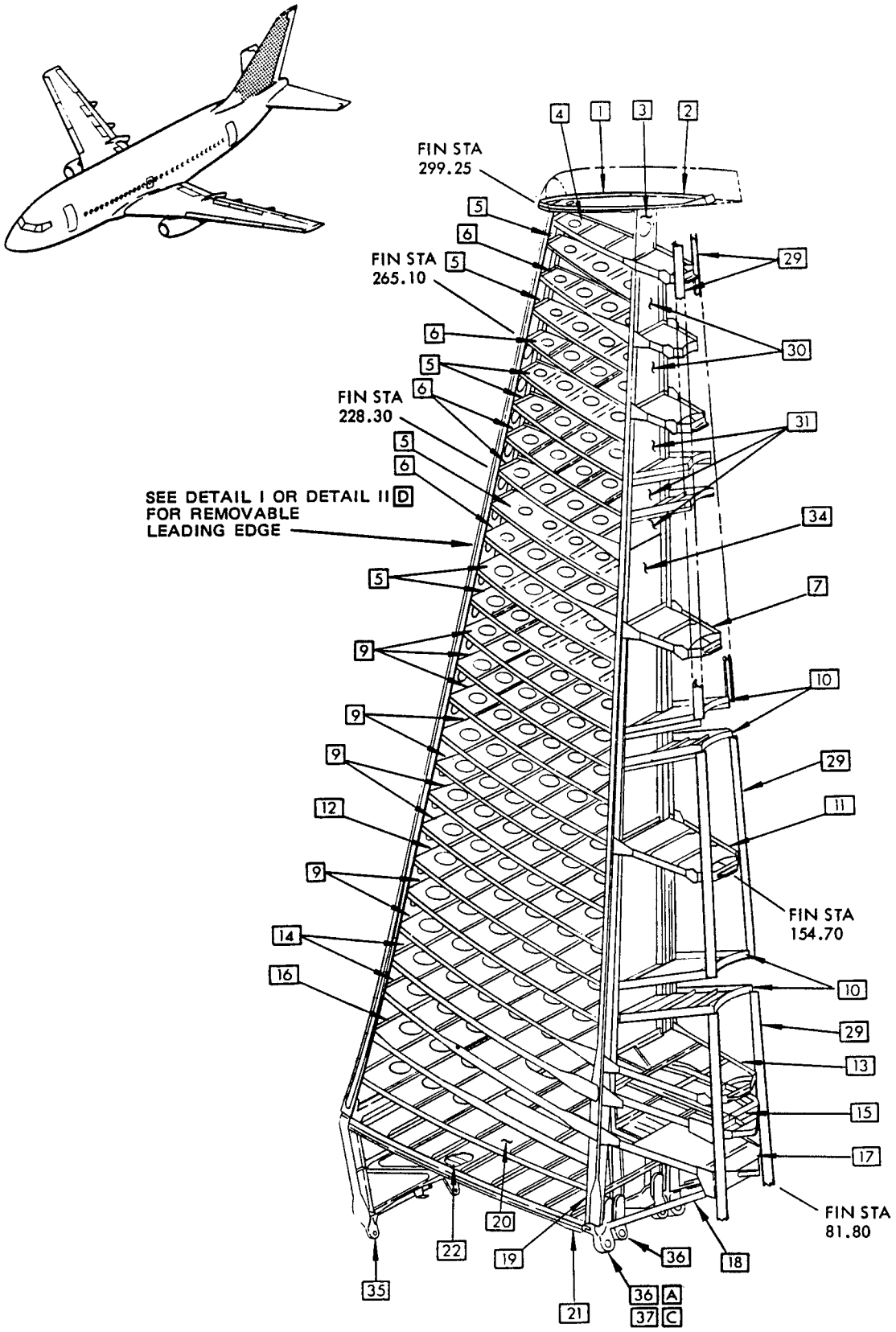


Vertical Stabilizer Structure Identification
Figure 2 (Sheet 5)

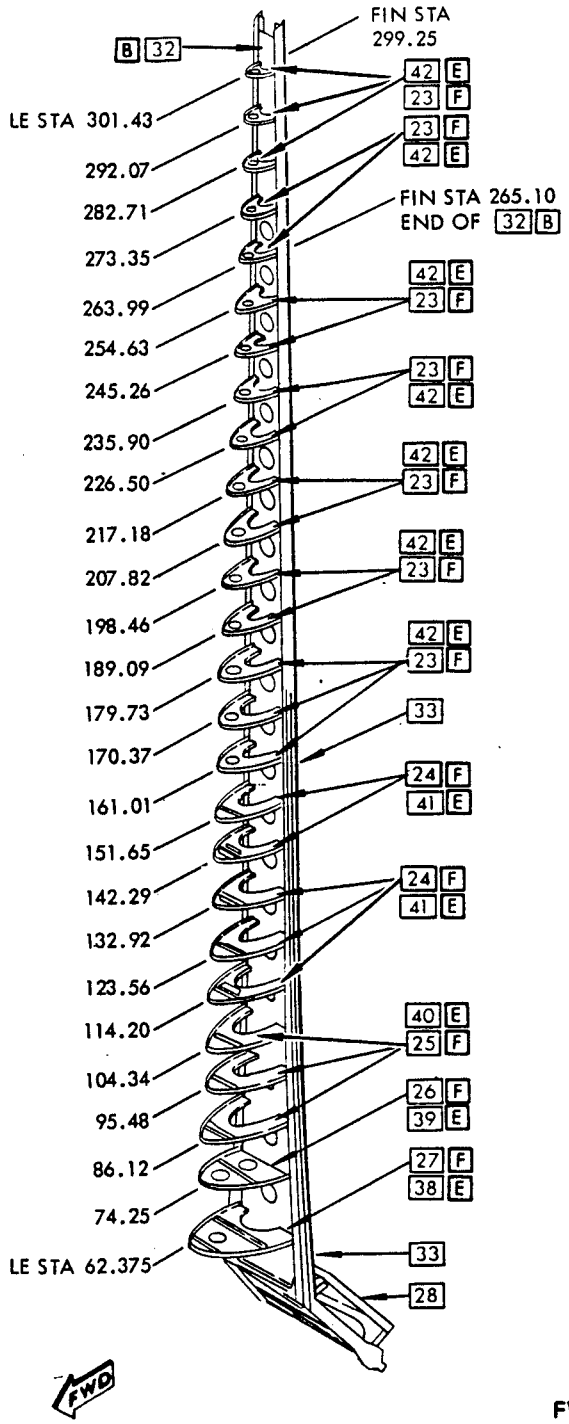


DETAIL I

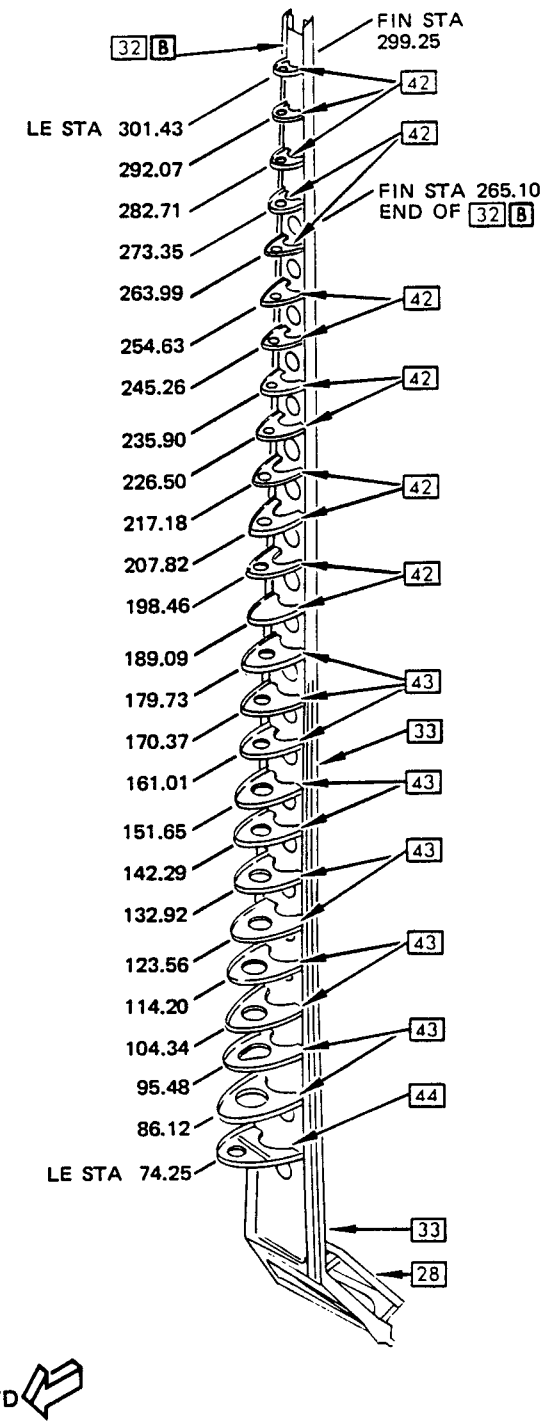


DETAIL II D

Vertical Stabilizer Structure Identification
Figure 2 (Sheet 6)

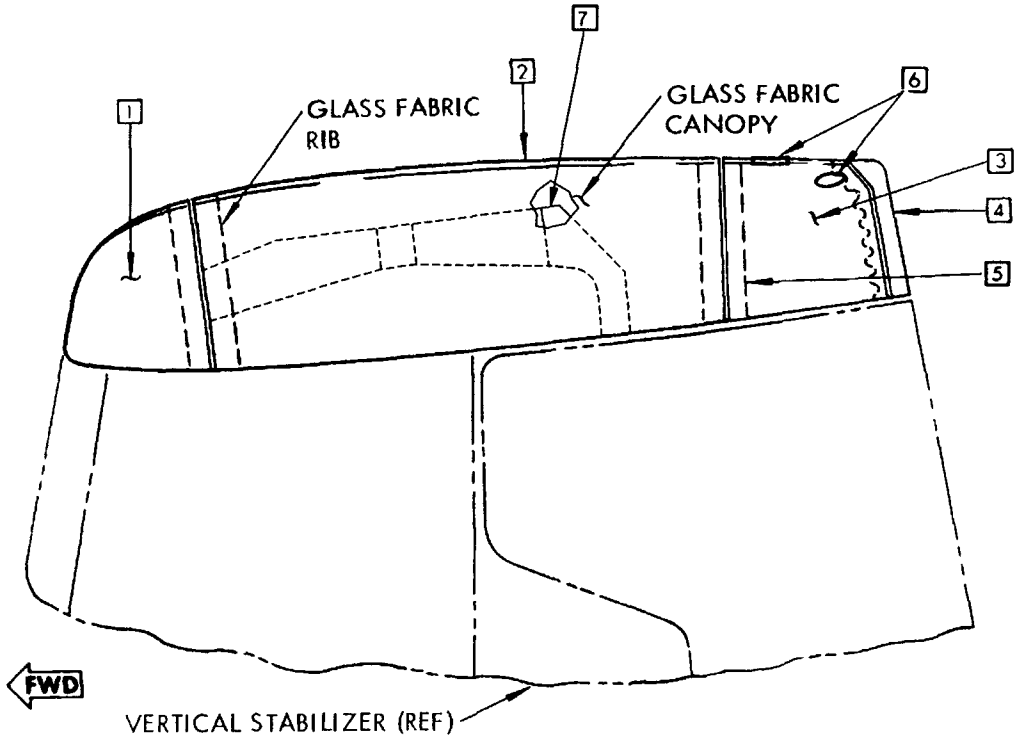


| ITEM | MATERIAL | REPAIR FIG. NO. |
|---|---|---|
| 1 | 0.050 CLAD 2024-T42 | |
| 2 | BAC1511-3787 6061-T6 | |
| 3 | 0.040 CLAD 2024-T3 | |
| 4 | ALUMINUM ALLOY DIE-CASTING CLASS II B A36D | |
| 5 | 0.063 CLAD 2024-T3 | |
| 6 | TIP DISCHARGE RETAINER SUPPLIED BY GRANGER ASSOCIATES, PALO ALTO, CALIFORNIA | |
| 7 | VOR ANTENNA SUPPLIED BY AIL SYSTEMS, 455 COMMACK RD. DEER PARK, NY 11729 | |

Vertical Stabilizer Structure Identification
Figure 3

## REPAIR INSTRUCTIONS

1. For skin cracks, drill stop-holes at each end of all cracks that do not extend into fastener holes.
2. For other damage, cut out the damage and make a hole with its major axis parallel to the ribs.
3. Make the repair doubler. Refer to Table I to find the applicable repair detail.
4. Break all the sharp edges of the initial part and the repair part.
5. Remove all nicks, gouges, scratches, and burrs from the skin at the cutout and the repair doubler.
6. Return all indented skin to its initial contour.
7. Drill the fastener holes as shown in Details I and II.
8. Apply alodine to the repair doubler and the skin cutout surfaces and edges. Refer to 51-10-2.
9. Install the repair doubler. Make a faying surface seal between the doubler and the skin with BMS 5-95 sealant. Refer to 51-20-4.
10. Make a continuous fillet seal around the exterior edges of the repair doubler with the sealant squeeze-out. Apply additional sealant where necessary.
11. Restore the initial finish. Refer to 51-21 of the Maintenance Manual.

## NOTES

- MAKE AN INSPECTION OF BLIND RIVET REPAIRS AT EVERY '2A' CHECK. REPLACE BLIND RIVET REPAIRS WITH FLUSH REPAIRS NOT LATER THAN THE NEXT 'C' CHECK. THIS REPAIR HAS FAA APPROVAL CONTINGENT ON ACCOMPLISHMENT OF THE INSPECTIONS AT THE INTERVALS CONTAINED HEREIN.
- REFER TO THE FOLLOWING WHEN USING THIS REPAIR:
  - 51-10-1 FOR INVESTIGATION AND CLEANUP OF DAMAGE
  - 51-20-4 FOR SEALING OF REPAIRS
  - 51-30 FOR FASTENER CODE, REMOVAL, INSTALLATION, HOLE SIZES, AND EDGE MARGINS, EXCEPT AS NOTED
  - 51-70 FOR AERODYNAMIC SMOOTHNESS REQUIREMENTS
  - 51-21 OF THE MAINTENANCE MANUAL FOR INTERIOR AND EXTERIOR FINISHES.

[A] INSERT COUNTERSINK REPAIR WASHERS IN INITIAL COUNTERSINK HOLES BETWEEN THE DOUBLER AND THE INITIAL SKIN AS DESCRIBED IN 51-30-8.

[B] FOR FIN STATION 66.35 THRU 182.30, THE SPACING IS 0.625 INCH. FOR FIN STATION 182.30 THROUGH 237.50 THE FASTENER SPACING IS 0.80 INCH.

## SYMBOLS

┼ INITIAL FASTENER LOCATION. INSTALL NAS1398D5 BLIND RIVET.

✦ REPAIR FASTENER LOCATION. INSTALL NAS1398D5 BLIND RIVET.

| REPAIR MATERIAL | | |
|---|---|---|
| PART | QTY | MATERIAL |
| 1 | 1 | 0.050 CLAD 2024-T3 |

| FIN STATION | DETAIL |
|---|---|
| 66.35-182.30 | I |
| 182.30-237.50 | I |
| 237.50-301.90 | II |

TABLE I

Vertical Stabilizer Interspar Skin - External Repair
Figure 1 (Sheet 1)

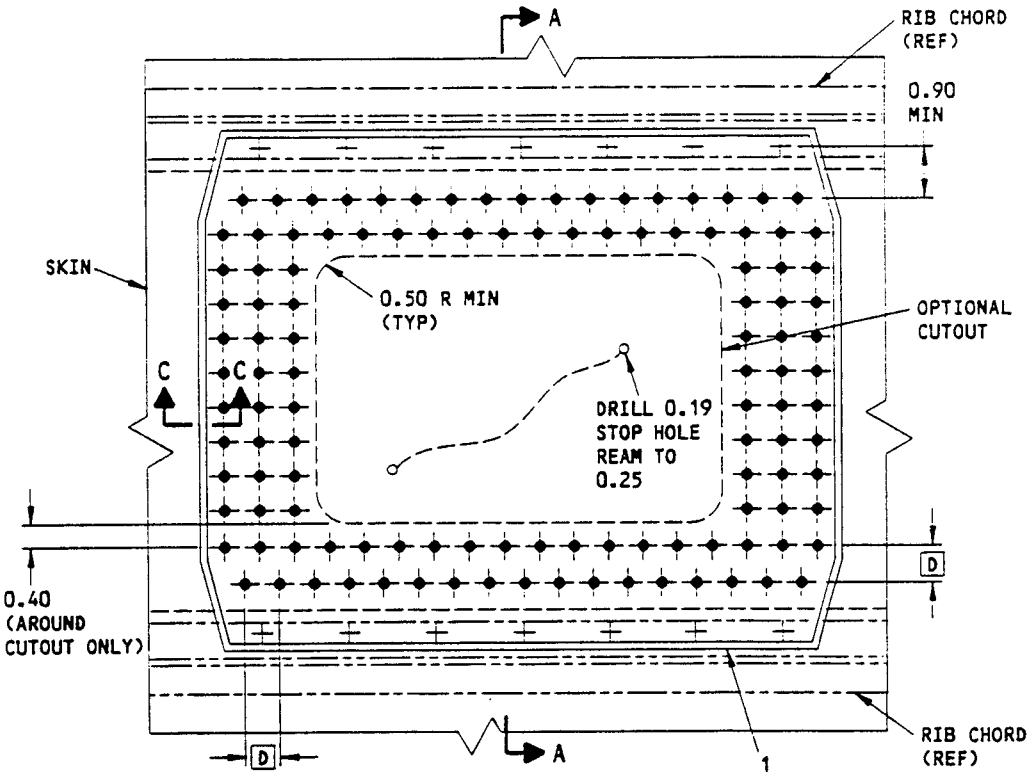


EXTERNAL REPAIR
DETAIL I

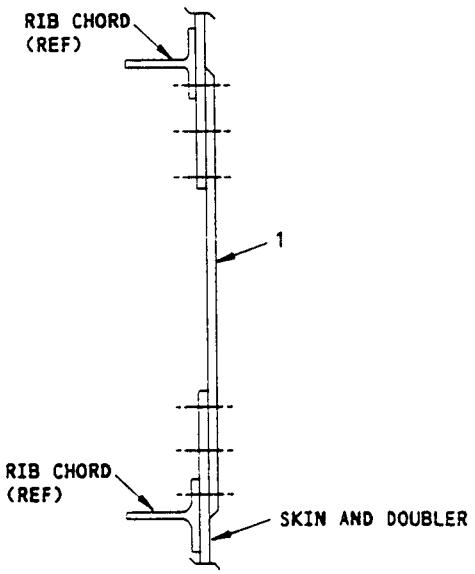


SECTION THROUGH REPAIR
SECTION A-A

Vertical Stabilizer Interspar Skin - External Repair
Figure 1 (Sheet 2)

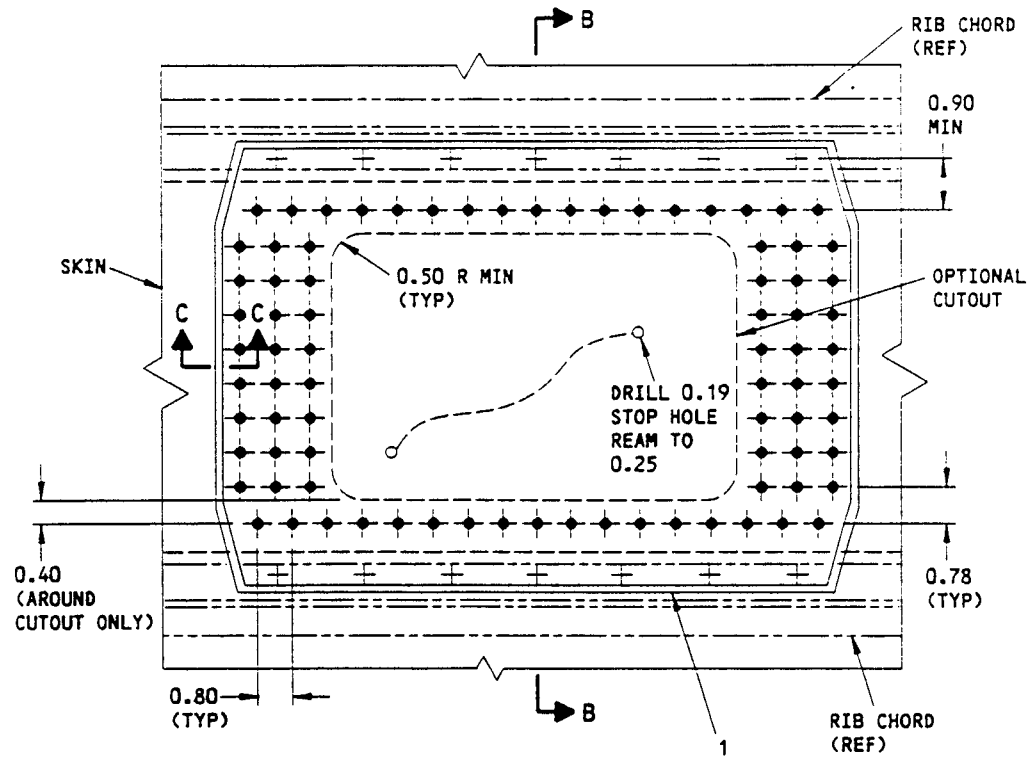


EXTERNAL REPAIR
DETAIL II

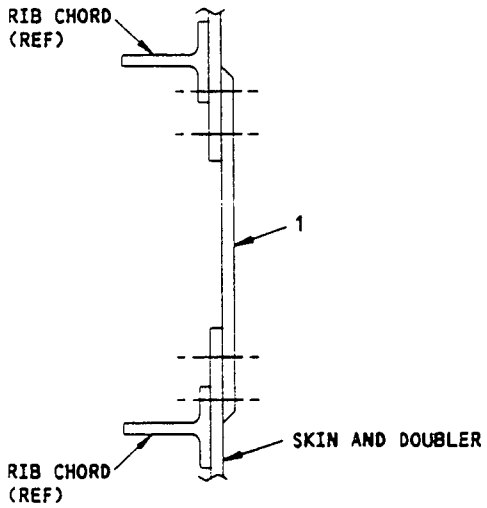


SECTION THROUGH REPAIR
SECTION B-B

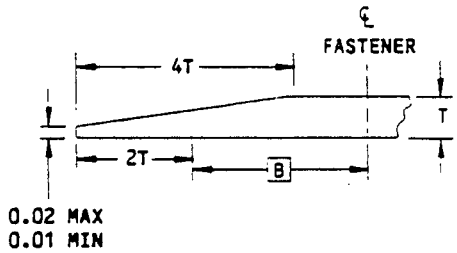


CHAMFER AT DOUBLER EDGE
SECTION C-C

Vertical Stabilizer Interspar Skin - External Repair
Figure 1 (Sheet 3)

## REPAIR INSTRUCTIONS

1. Remove the leading edge skin panels or install interspar access doors as necessary to get access to the damaged area. Refer to SRM 55-30-3, Figure 4, for the access door installation.

   NOTE: The access door installation in Figure 4 can be used as an alternative to the repair described here.

2. Cut out the damaged part of the skin, with the sides of the cutout parallel to the rib. Refer to Table I to find the applicable repair detail.
3. Make the repair parts. Refer to Table II.
4. Assemble the repair parts and drill the fastener holes.
5. Disassemble the repair parts.
6. Remove all the nicks, scratches, gouges, and sharp edges from the skin and the repair parts.
7. Apply a chemical conversion coating to the repair parts and to edges of the hole cut out of the skin. Refer to SRM 51-10-2.
8. Apply one layer of BMS 10-79, Type II primer to the repair parts. Apply one layer of BMS 10-79, Type II primer to the bare edges of the skin. Refer to AMM 51-21.
9. Install the repair parts with BMS 5-95 sealant between the faying surfaces. Install the non-aluminum fasteners wet with BMS 5-95 sealant.
10. Fill the gap on the outer surface with BMS 5-95 aerodynamic sealant. Refer to SRM 51-20-4.
11. Apply the finish to the repair area. Refer to AMM 51-21.

## NOTES

- THIS REPAIR COULD HAVE AN EFFECT ON A STRUCTURALLY SIGNIFICANT ITEM (SSI) GIVEN IN SRM 51-00-4, FIG. 3. BUT, NO CHANGE TO THE SUPPLEMENTAL STRUCTURAL INSPECTION DOCUMENT (SSID) INSPECTION PROGRAM IS NECESSARY.
- WHEN YOU USE THIS REPAIR REFER TO:
  - AMM 51-21 FOR INTERIOR AND EXTERIOR FINISHES
  - SRM 51-10-1 FOR INVESTIGATION AND CLEANUP OF DAMAGE
  - SRM 51-10-2 FOR PROTECTIVE TREATMENT OF METAL
  - SRM 51-20-4 FOR SEALING OF REPAIRS
  - SRM 51-30 FOR FASTENER CODE, REMOVAL, INSTALLATION, HOLE SIZES, AND EDGE MARGINS, EXCEPT AS NOTED
  - SRM 51-40-5 FOR BONDED METAL REPAIR
  - SRM 51-70 FOR AERODYNAMIC SMOOTHNESS REQUIREMENTS.

  D = FASTENER DIAMETER

[A] SAME LENGTH AS THE REPAIR PART 1

[B] USE DETAIL IV IF THERE IS NOT SUFFICIENT SPACE TO PUT THE REPAIR DOUBLER THROUGH THE CUTOUT IN ONE PIECE

[C] USE DETAIL VI IF THERE IS NOT SUFFICIENT SPACE TO PUT THE REPAIR DOUBLER THROUGH THE CUTOUT IN ONE PIECE

[D] FOR FIN STATIONS 66.35 THROUGH 182.30, THE SPACING IS 0.625 INCH. FOR FIN STATIONS 182.30 THROUGH 237.50, THE SPACING IS 0.800 INCH

[E] IF THERE IS NO ACCESS, MAKE THE CUTOUT OF SUFFICIENT SIZE TO INSTALL THE REPAIR DOUBLER THROUGH THE CUTOUT. THE MAXIMUM PERMITTED LENGTH OF THE CUTOUT IS 7.15 INCHES FOR A REPAIR BETWEEN FIN STA 66.35 AND FIN STA 73.50 AND 9.2 INCHES AT ALL OTHER LOCATIONS

[F] RADIUS THE END OF THE REPAIR DOUBLER TO NEST IN THE RADIUS OF THE RIB CHORD

[G] TWO ARE REQUIRED IF THE DOUBLER IS SPLICED

Vertical Stabilizer Interspar Skin - Flush Repair
Figure 2 (Sheet 1)


BOEING PROPRIETARY - Copyright © - Unpublished Work - See title page for details.

NOTES (CONTINUED)

[H] SEE DETAIL II IF THE RIB CHORD IS AN EXTRUDED ANGLE OR DETAIL III FOR A TYPICAL JOGGLE IF THE RIB CHORD IS AN EXTRUDED TEE

[I] FOR AIRPLANES WITH A 0.040 SKIN AND A 0.020 BONDED DOUBLER

[J] FOR AIRPLANES WITH A 0.032 SKIN AND 0.010 BONDED DOUBLER

[K] FOR AIRPLANES WITH A CHEM-MILLED SKIN

SYMBOLS

+ INITIAL FASTENER LOCATION. INSTALL THE SAME TYPE AND SIZE FASTENER AS THE INITIAL FASTENER

⊕ REPAIR FASTENER LOCATION. INSTALL A BACR15CE5D RIVET

| FIN STATION | DETAIL |
|---|---|
| 66.35-182.30 | I OR IV [B] |
| 182.30-237.50 | I OR IV [B] |
| 237.50-301.90 | V OR VI [C] |

TABLE I

| REPAIR MATERIAL | | | |
|---|---|---|---|
| | PART | QTY | MATERIAL |
| 1 | DOUBLER | 1 OR 2 [G] | 0.063 [I] OR 0.050 [J] [K] CLAD 2024-T3 |
| 2 | FILLER | 1 | CLAD 2024-T3 SAME THICKNESS AS THE INITIAL SKIN |
| 3 | ANGLE [A] | AS REQ'D | AND10134-1401 CLAD 2024-T3 |
| 4 | SPLICE PLATE | 2 | 0.063 [I] OR 0.050 [J] [K] CLAD 2024-T3 |

TABLE II

Vertical Stabilizer Interspar Skin - Flush Repair
Figure 2 (Sheet 2)

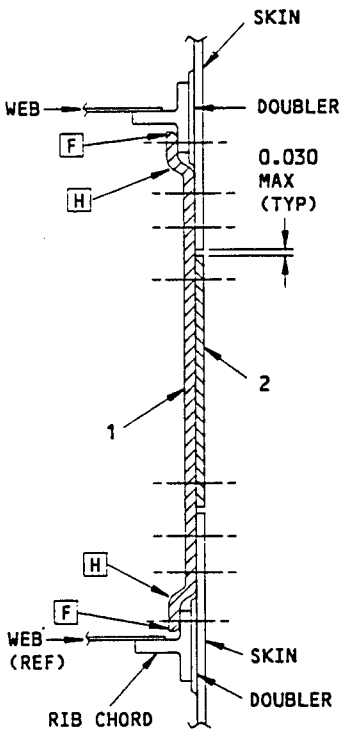


SECTION A-A

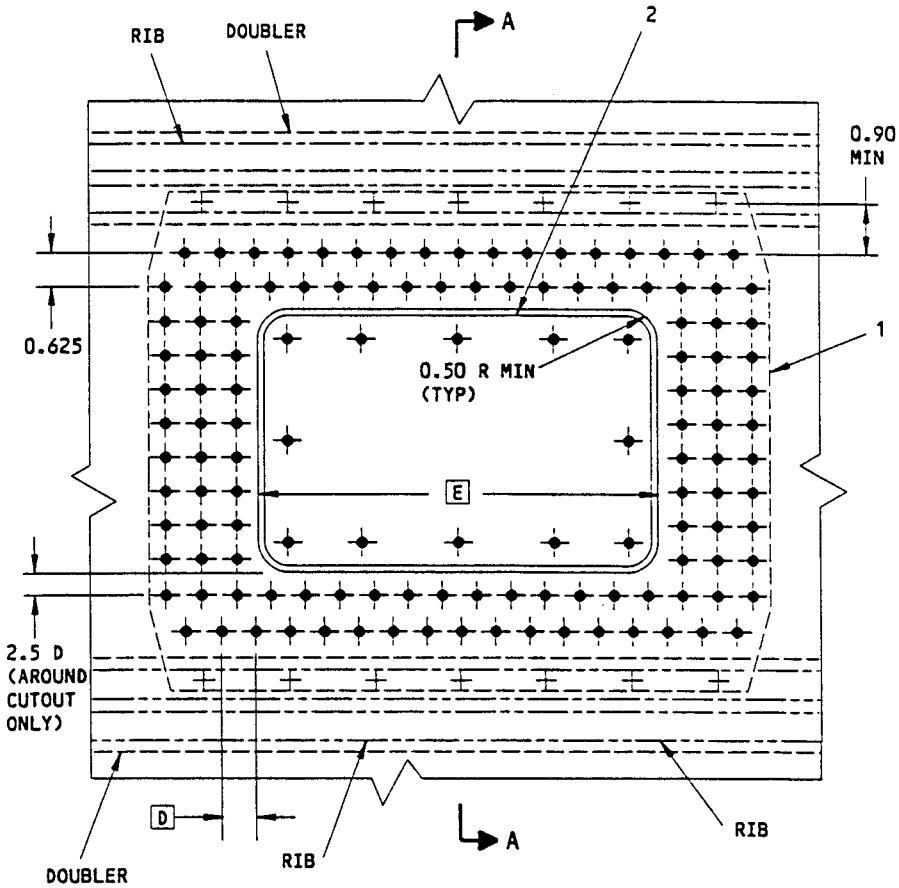


DETAIL I

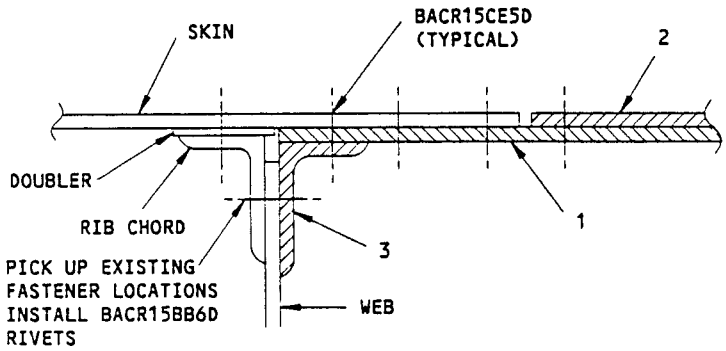


REPAIR TO BE USED WHEN RIB
CHORDS ARE EXTRUDED ANGLES
DETAIL II

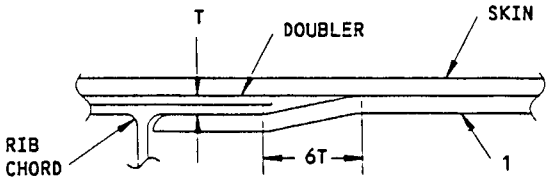


TYPICAL JOGGLE 6T
T = CHORD AND DOUBLER THICKNESS

DETAIL III

Vertical Stabilizer Interspar Skin - Flush Repair
Figure 2 (Sheet 3)

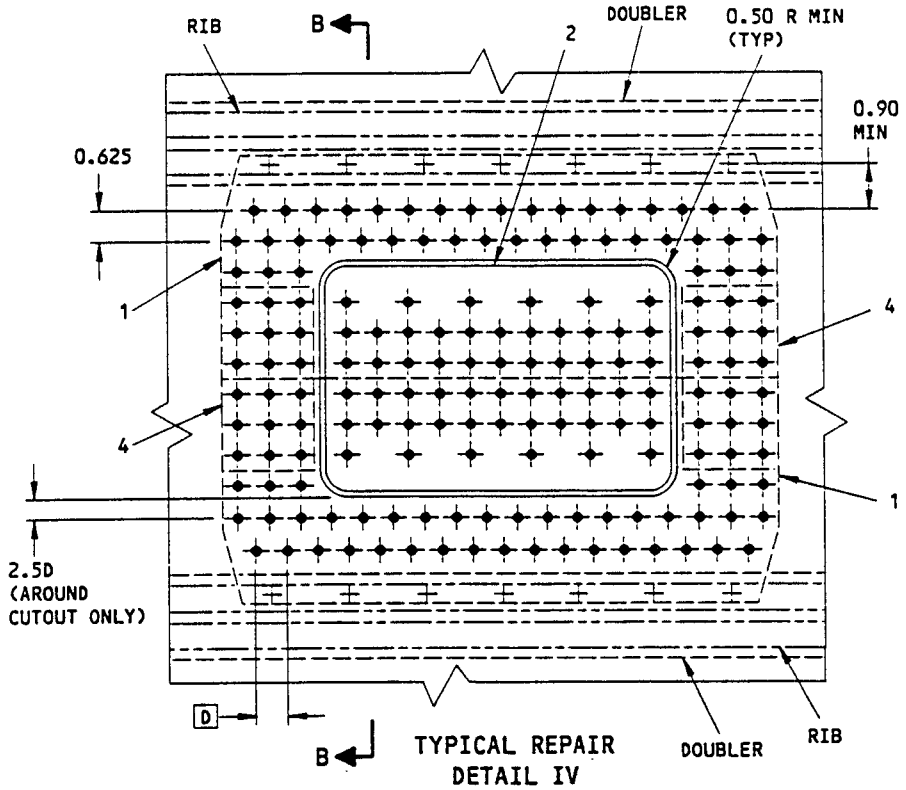


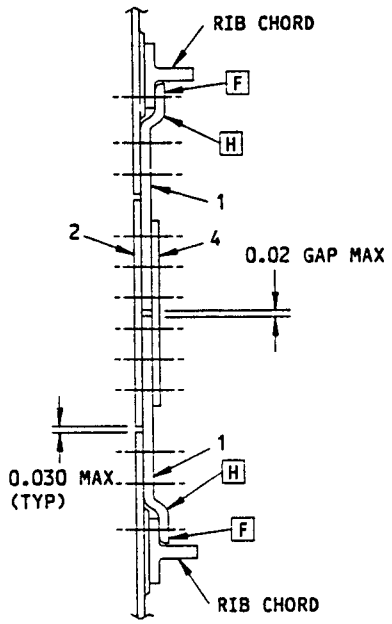


SECTION B-B

Vertical Stabilizer Interspar Skin - Flush Repair
Figure 2 (Sheet 4)

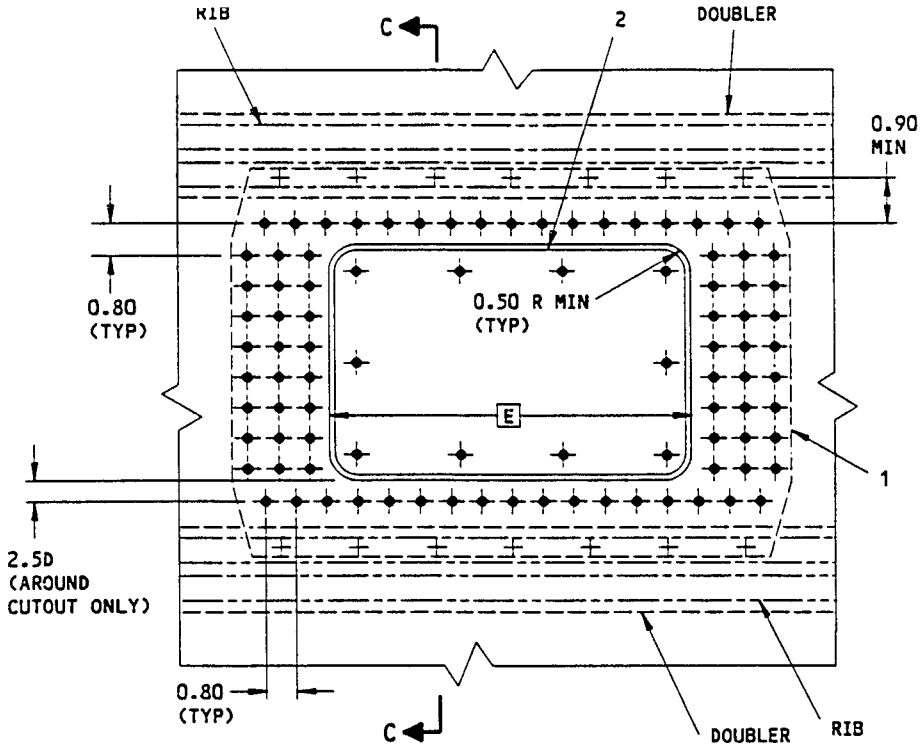


TYPICAL REPAIR
DETAIL V

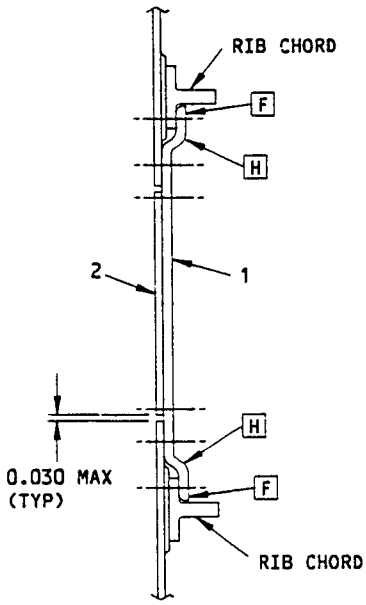


SECTION C-C

Vertical Stabilizer Interspar Skin - Flush Repair
Figure 2 (Sheet 5)

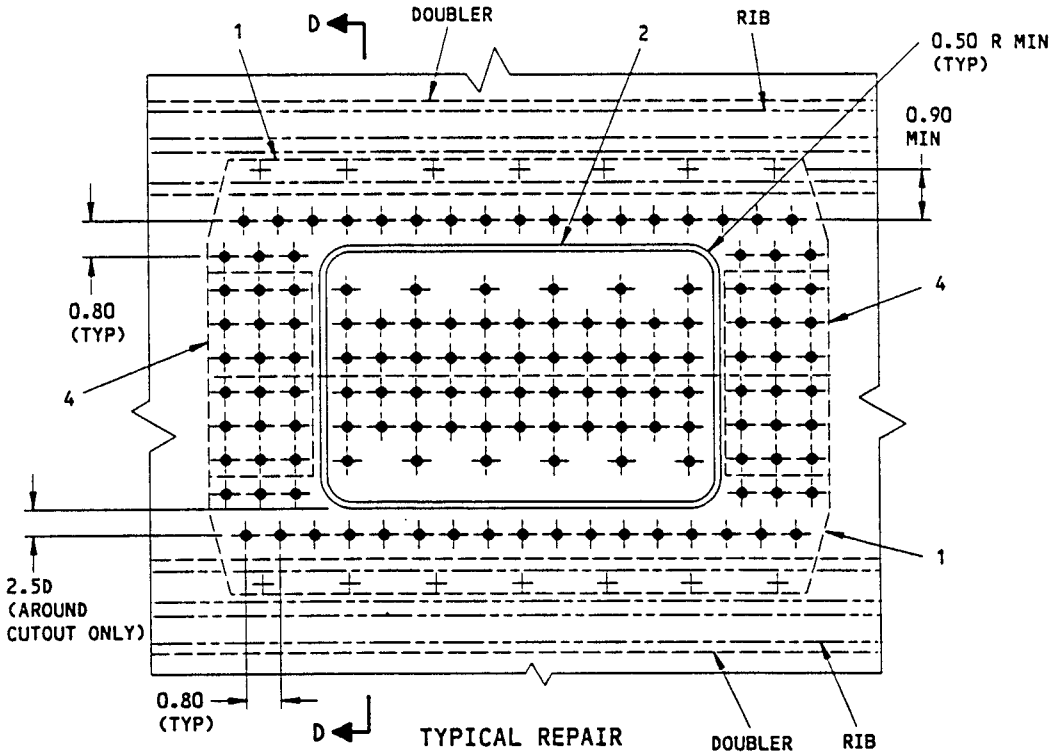


TYPICAL REPAIR
DETAIL VI

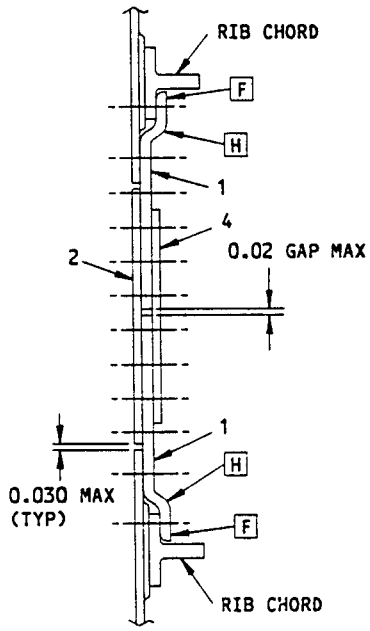


SECTION D-D

Vertical Stabilizer Interspar Skin - Flush Repair
Figure 2 (Sheet 6)

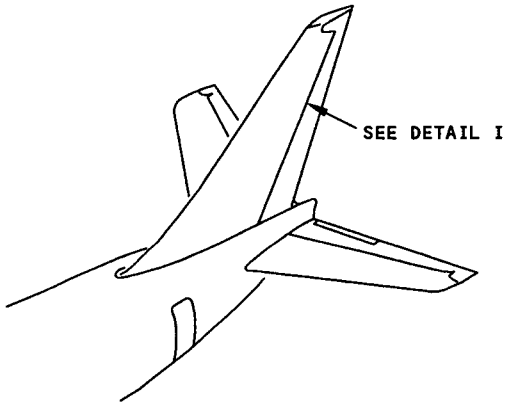


NOTES

- THESE REPAIRS WILL NOT HAVE AN EFFECT ON A STRUCTURALLY SIGNIFICANT ITEM (SSI) GIVEN IN SRM 51-00-4, FIG. 3. THUS, NO CHANGE TO THE SUPPLEMENTAL STRUCTURAL INSPECTION DOCUMENT (SSID) INSPECTION PROGRAM IS NECESSARY.

[A] REFER TO SRM 55-30-2 FOR EFFECTIVITY OF GLASS/ARAMID/GRAPHITE/EPOXY COMPOSITE PANELS.

[B] REFER TO TABLES I AND II FOR REPAIR DATA.

[C] MINIMUM DISTANCE BETWEEN REPAIR AND ANY METAL DOUBLER TO BE 1.0 INCH (EDGE TO EDGE).

Repairs to Vertical Stabilizer Glass/Aramid/Graphite/Epoxy
Composite Trailing Edge Panels
Figure 3 (Sheet 1)


BOEING PROPRIETARY - Copyright © - Unpublished Work - See title page for details.

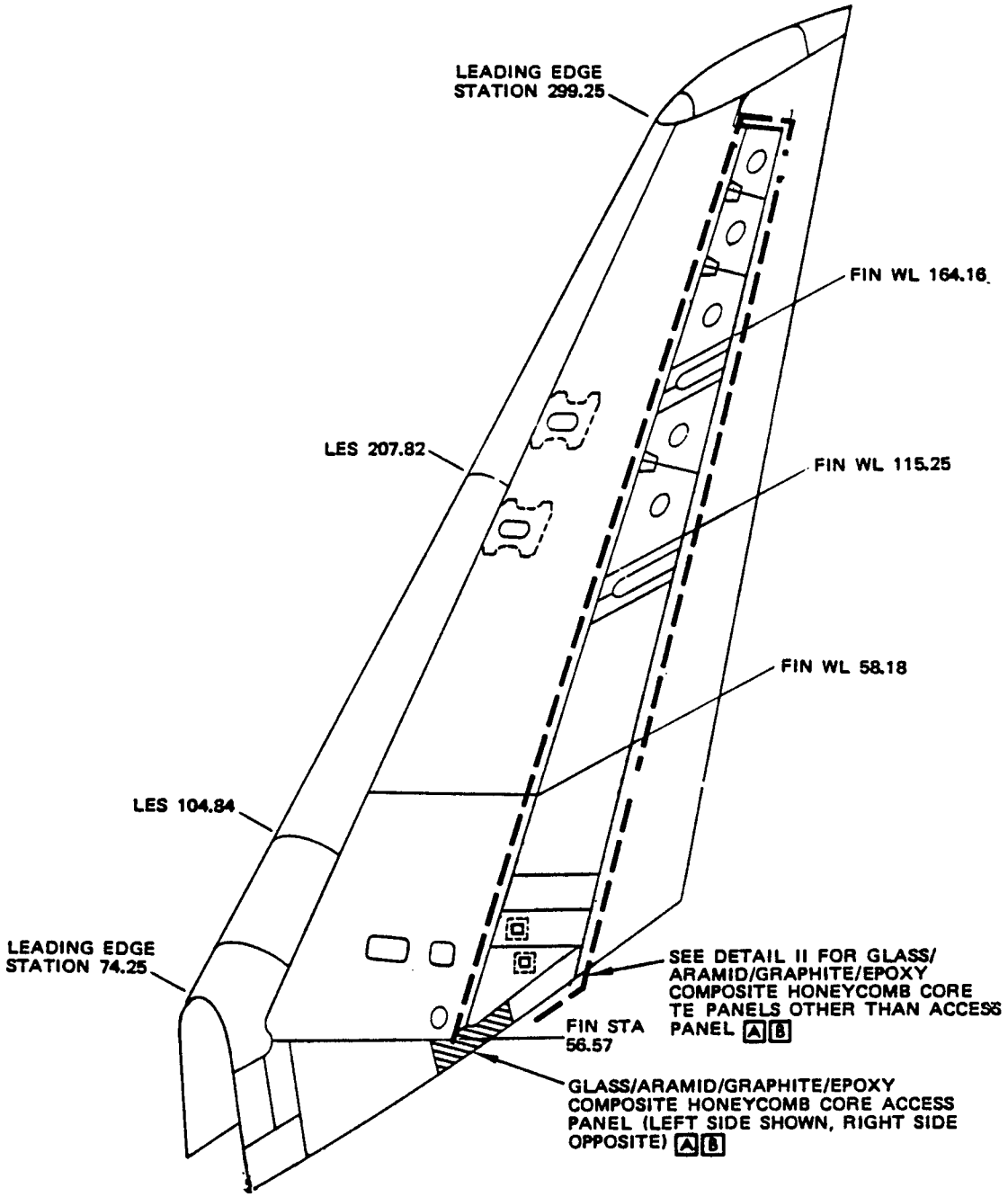


DETAIL I

Repairs to Vertical Stabilizer Glass/Aramid/Graphite/Epoxy
Composite Trailing Edge Panels
Figure 3 (Sheet 2)

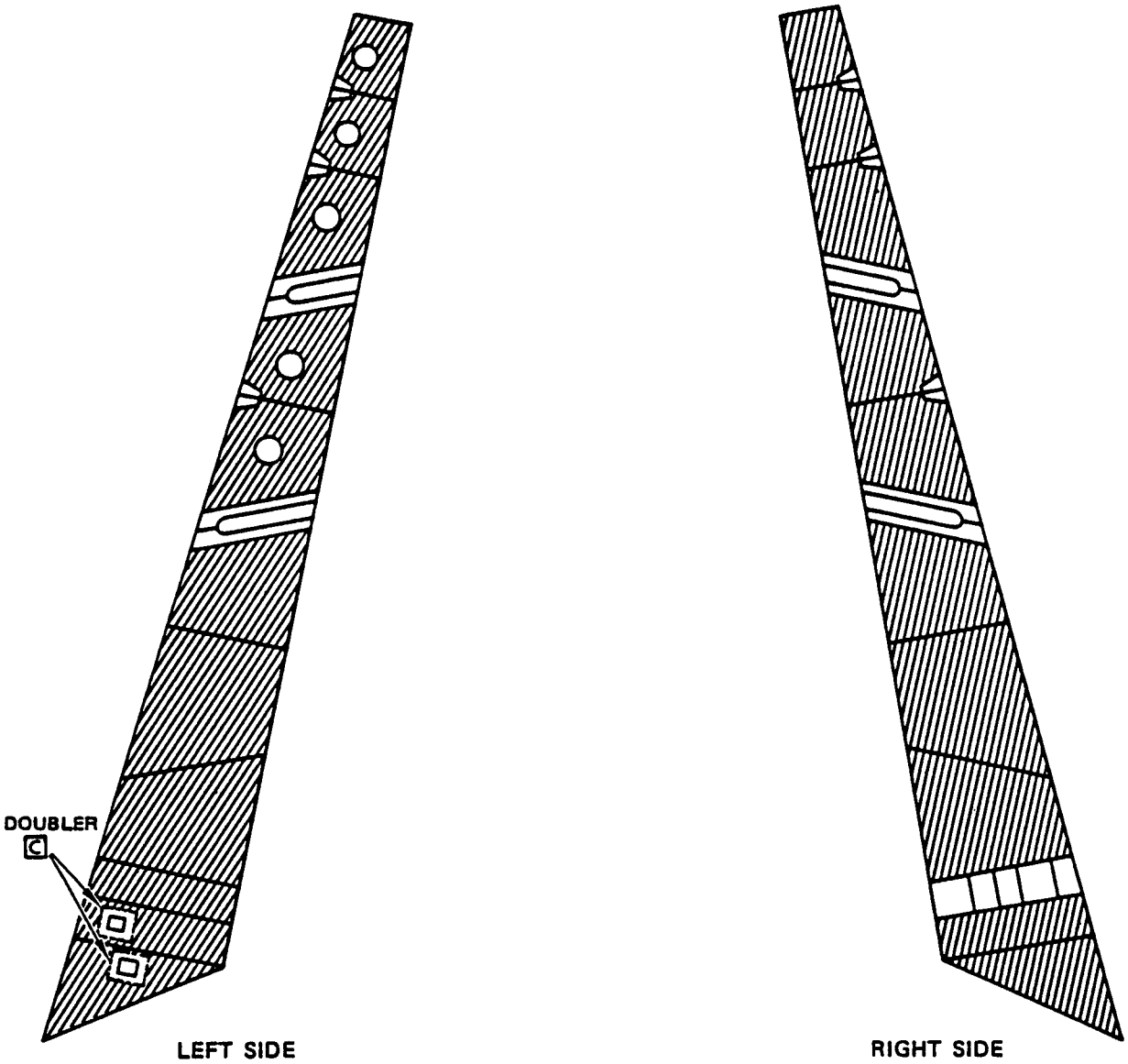


DETAIL II A B

Repairs to Vertical Stabilizer Glass/Aramid/Graphite/Epoxy
Composite Trailing Edge Panels
Figure 3 (Sheet 3)

| DAMAGE | INTERIM REPAIRS E | PERMANENT REPAIRS | | |
|---|---|---|---|---|
| | WET LAYUP ROOM TEMP (51-40-12) | WET LAYUP 150°F CURE (51-40-12) | WET LAYUP 200°F CURE (51-40-15) | 250°F CURE (51-40-13) |
| HOLES | 2.0 MAX DIA NOT TO EXCEED 30% OF SMALLEST DIMENSION ACROSS HONEYCOMB PANEL AT THE DAMAGE LOCATION. REPAIR PER 51-40-12, REPAIR 14. D | 6.0 MAX DIA NOT TO EXCEED 50% OF SMALLEST DIMENSION ACROSS HONEYCOMB PANEL AT THE DAMAGE LOCATION. USE TWO EXTRA PLIES PER FACESHEET REPAIRED F | 6.0 MAX DIA NOT TO EXCEED 50% OF SMALLEST DIMENSION ACROSS HONEYCOMB PANEL AT THE DAMAGE LOCATION. USE TWO EXTRA PLIES PER FACESHEET REPAIRED F | NO SIZE LIMIT |
| CRACKS | UP TO 6.0 INCHES LONG, REPAIR PER 51-40-12, REPAIR 14. D | USE SAME LIMITS AND REQUIREMENTS AS FOR HOLES | | |
| DELAMINATION | USE SAME LIMITS AS FOR HOLES AND REPAIR PER 51-40-12, REPAIR 14. D | USE SAME LIMITS AND REQUIREMENTS AS FOR HOLES | | |
| NICKS AND GOUGES | IF FIBER DAMAGE OR DELAMINATION EXISTS, USE SAME LIMITS AS FOR HOLES AND REPAIR PER 51-40-12, REPAIR 14. D | IF THERE IS NO FIBER DAMAGE OR DELAMINATION, FILL NICKS OR GOUGES PER 51-40-12.<br><br>IF FIBER DAMAGE OR DELAMINATION EXISTS, USE SAME LIMITS AND REQUIREMENTS AS FOR HOLES | | |
| DENTS | USE SAME LIMITS AS FOR HOLES AND REPAIR PER 51-40-12, REPAIR 14. D | UP TO 2.0 IN. DIA WITH NO FIBER DAMAGE OR DELAMINATION, REPAIR PER 51-40-12, REPAIR 12. F<br><br>IF OVER 2.0 IN. DIA OR WITH FIBER DAMAGE OR DELAMINATION, USE SAME LIMITS AND REQUIREMENTS AS FOR HOLES | | |

REPAIR DATA FOR 250°F CURE HONEYCOMB PANELS
TABLE I

Repairs to Vertical Stabilizer Glass/Aramid/Graphite/Epoxy
Composite Trailing Edge Panels
Figure 3 (Sheet 4)

NOTES

- REFINISH REWORKED AREAS PER 51-20 OF THE MAINTENANCE MANUAL
- REFER TO 51-70 FOR AERODYNAMIC SMOOTHNESS REQUIREMENTS. WHERE THE DAMAGE EXCEEDS THE LIMITS SHOWN IN 51-70, CONSIDERATION SHOULD BE GIVEN TO THE LOSS OF PERFORMANCE INVOLVED
- WHERE NO REPAIR IS SPECIFIED, USE THE REPAIR INDEX IN THE APPROPRIATE REPAIR SECTION OF 51-40 TO DETERMINE THE REPAIR TO BE USED
- REFER TO 51-40 FOR INVESTIGATION AND CLEANUP OF DAMAGE

[D] LIMITED TO REPAIR OF DAMAGE TO ONE FACESHEET SKIN AND HONEYCOMB CORE. ONE REPAIR PER SQUARE FOOT OF AREA AND MINIMUM OF 6.0 INCHES (EDGE TO EDGE) FROM ANY OTHER DAMAGE (ON EITHER SIDE OF PANEL), FASTENER HOLE, OR EDGE OF PANEL

[E] INSPECT INTERIM REPAIR USING NDI METHODS PER 51-40-12 EVERY AIRPLANE "2A" CHECK. PERMANENT REPAIR IS REQUIRED IF ANY DETERIORATION IS EVIDENT. THESE REPAIRS HAVE FAA APPROVAL CONTINGENT ON ACCOMPLISHMENT OF THE INSPECTIONS AT THE REQUIRED INTERVALS

[F] ONE REPAIR PER SQUARE FOOT OF AREA AND A MINIMUM OF 3.0 INCHES (EDGE TO EDGE) FROM ANY OTHER DAMAGE (ON EITHER SIDE OF PANEL), FASTENER HOLE, OR EDGE OF PANEL

Repairs to Vertical Stabilizer Glass/Aramid/Graphite/Epoxy
Composite Trailing Edge Panels
Figure 3 (Sheet 5)

| DAMAGE | INTERIM REPAIRS [E] | PERMANENT REPAIRS | |
|---|---|---|---|
| | WET LAYUP ROOM TEMP (51-40-12) | WET LAYUP 200°F CURE (51-40-15) | 250°F CURE (51-40-13) |
| HOLES | REPAIR DAMAGE TO FASTENER HOLES PER 51-40-12, REPAIR 9<br><br>FOR ALL OTHER DAMAGE UP TO 15% OF CROSS-SECTIONAL AREA THRU THE EDGE-BAND OR 10% OF THE EDGEBAND LENGTH PER AF-FECTED SIDE, REPAIR PER 51-40-12, REPAIR 7 | REPAIR DAMAGE TO FAST-ENER HOLES PER 51-40-15, REPAIR 9<br><br>FOR ALL OTHER DAMAGE, REPAIR PER 51-40-15, REPAIR 7 | REPAIR DAMAGE TO FASTENER HOLES PER 51-40-13, REPAIR 9<br><br>FOR ALL OTHER DAMAGE, REPAIR PER 51-40-13, REPAIR 7 |
| DELAMI-NATION | IF DELAMINATION FROM PANEL EDGE IS NO LESS THAN 2D FROM ANY FAST-ENER HOLE, REPAIR PER 51-40-12, REPAIR 6<br><br>FOR ANY OTHER DELAMINATION, USE SAME LIMITS AND REPAIRS AS FOR HOLES | USE SAME REPAIRS AS FOR HOLES | |
| CRACKS | USE SAME LIMITS AND REPAIRS AS FOR HOLES | USE SAME REPAIRS AS FOR HOLES | |

REPAIR DATA FOR EDGEBANDS OF 250°F CURE HONEYCOMB PANELS
TABLE II (CONT)

Repairs to Vertical Stabilizer Glass/Aramid/Graphite/Epoxy
Composite Trailing Edge Panels
Figure 3 (Sheet 6)

| DAMAGE | INTERIM REPAIRS [E] | PERMANENT REPAIRS | |
|---|---|---|---|
| | WET LAYUP ROOM TEMP (51-40-12) | WET LAYUP 200°F CURE (51-40-15) | 250°F CURE (51-40-13) |
| NICKS AND GOUGES | IF FIBER DAMAGE EXISTS, USE SAME LIMITS AND REPAIRS AS FOR HOLES | IF THERE IS NO FIBER DAMAGE OR DELAMINATION, FILL NICKS OR GOUGES PER 51-40-12. | |
| | IF DELAMINATION EXISTS, USE SAME LIMITS AND REPAIRS AS FOR DELAMINATION | IF FIBER DAMAGE OR DELAMINATION EXISTS, USE SAME REPAIRS AS FOR HOLES | |
| DENTS | IF FIBER DAMAGE EXISTS, USE SAME LIMITS AND REPAIRS AS FOR HOLES | IF THERE IS NO FIBER DAMAGE OR DELAMINATION, REPAIR PER 51-40-12, REPAIR 12 | |
| | IF DELAMINATION EXISTS, USE SAME LIMITS AND REPAIRS AS FOR DELAMINATION | IF FIBER DAMAGE OR DELAMINATION EXISTS, USE SAME REPAIRS AS FOR HOLES | |

REPAIR DATA FOR EDGEBANDS OF 250°F CURE HONEYCOMB PANELS
TABLE II

NOTES

- D = FASTENER DIAMETER

Repairs to Vertical Stabilizer Glass/Aramid/Graphite/Epoxy
Composite Trailing Edge Panels
Figure 3 (Sheet 7)

| APPLICABILITY |
| --- |
| THIS INSTALLATION IS APPLICABLE TO THE VERTICAL STABILIZER FROM FIN STATION 117.90 TO 292.70 |

## INSTALLATION INSTRUCTIONS

1. Cut the hole in the skin. Refer to Detail I. [A]
2. Remove the fasteners from the rib chords as necessary to install the access door.
3. Make the parts for the installation. Refer to Table I.
4. Put the parts into position and drill all of the fastener holes except for those that go through parts 1 and 2 at the nutplate locations.
5. Remove the parts for the installation.
6. Remove all of the nicks, scratches, gouges, burrs and sharp edges from the skin and the parts for the installation.
7. Apply Alodine to the repair parts. Refer to 51-10-2.
8. Apply one layer of BMS 10-79, Type II primer to the parts for the installation. Refer to 51-21 of the Maintenance Manual.
9. Install parts 2 and 3 (or 3, 4, and 5, as applicable) with BMS 5-95 between the faying surfaces. Install the fasteners, except for the fasteners at the nutplate locations. Install the fasteners wet with BMS 5-95 sealant.
10. Put part 1 into position and drill the 0.190-0.199 holes through parts 1 and 2.
11. Remove part 1.
12. Put the nutplates into position and drill the rivet holes.
13. Remove the nutplates.
14. Remove all of the nicks, scratches, gouges, burrs and sharp edges from the edges of the fastener holes.
15. Apply Alodine to the edges of the fastener holes. Refer to 51-10-2.
16. Apply one layer to BMS 10-79, Type II primer to the edges of the fastener holes. Refer to 51-21 of the Maintenance Manual.
17. Install the nutplates with BACR15BA3D rivets.
18. Apply BMS 10-86, Type I, white abrasion resistant coating to the faying surfaces of parts 1 and 2.
19. Install part 1 with BMS 5-95 sealant between the faying surfaces. Refer to 51-20-4.
20. Intall the BACB30EL3-() bolts wet with BMS 5-95 sealant.
21. Fill the gap on the outer surface with BMS 5-95 sealant. Refer to 51-20-4.
22. Apply the finish to the installation. Refer to 51-21 of the Maintenance Manual.

Vertical Stabilizer Access Panel Installation
Figure 4 (Sheet 1)

## NOTES

- THIS REPAIR WILL NOT HAVE AN EFFECT ON A STRUCTURALLY SIGNIFICANT ITEM (SSI) GIVEN IN SRM 51-00-4, FIG. 3. THUS, NO CHANGE TO THE SUPPLEMENTAL STRUCTURAL INSPECTION DOCUMENT (SSID) INSPECTION PROGRAM IS NECESSARY.
- WHEN YOU USE THIS REPAIR, REFER TO:
  - AMM 51-21 FOR INTERIOR AND EXTERIOR FINISHES
  - SOPM 20-44-01 FOR APPLICATION OF ABRASION RESISTANT FINISHES
  - SRM 51-10-1 FOR INVESTIGATION AND CLEANUP OF DAMAGE
  - SRM 51-10-2 FOR PROTECTIVE TREATMENT OF METAL
  - SRM 51-20-4 FOR SEALING OF REPAIRS
  - SRM 51-30 FOR FASTENER CODE, REMOVAL, INSTALLATION, HOLE SIZES, AND EDGE MARGINS
  - SRM 51-70 FOR AERODYNAMIC SMOOTHNESS REQUIREMENTS.

[A] USE DETAIL II ONLY IF THERE IS NOT SUFFICIENT SPACE TO PUT REPAIR PART 2 THROUGH THE CUTOUT IN ONE PIECE.

[B] USE REPAIR PARTS 4 AND 5 (DETAIL II) ONLY IF THERE IS NOT SUFFICIENT SPACE TO PUT REPAIR PART 2 (DETAIL I) THROUGH THE CUTOUT IN ONE PIECE.

[C] FOR FIN STATION 117.90 THRU 182.30, THE SPACING IS 0.80. FOR FIN STATION 182.30 THRU 292.70, THE SPACING IS 0.65.

[D] RADIUS THE END OF THE REPAIR PLATE TO NEST IN THE RADIUS OF THE RIB CHORD.

[E] FOR AIRPLANES WITH A 0.040 SKIN AND A 0.020 BONDED DOUBLER.

[F] FOR AIRPLANES WITH A 0.032 SKIN AND A 0.010 BONDED DOUBLER.

[G] FOR AIRPLANES WITH A CHEM-MILLED SKIN.

## FASTENER SYMBOLS

+ INITIAL FASTENER LOCATION. INSTALL THE SAME TYPE AND SIZE FASTENER AS THE INITIAL FASTENER.

REPAIR FASTENER LOCATION. INSTALL A BACR15BB5D RIVET.

NUTPLATE AND REPAIR FASTENER LOCATION. INSTALL A BACN10JR3 NUTPLATE WITH TWO BACR15BA3D RIVETS. INSTALL A BACB30EL3-() BOLT TO ATTACH REPAIR PART 1.

| REPAIR MATERIAL | | | |
|---|---|---|---|
| PART | | QTY | MATERIAL |
| 1 | COVER PLATE | 1 | 0.063 [E] OR<br>0.050 [F] [G]<br>CLAD 2024-T3 |
| 2 [B] | DOUBLER | 1 | 0.063 [E] OR<br>0.050 [F] [G]<br>CLAD 2024-T3 |
| 3 | SHIM | 1 | 0.020 [E] OR<br>0.010 [F] OR<br>0.018 [G]<br>2024-T3 |
| 4 [B] | SPLICE | 2 | 0.063 [E] OR<br>0.050 [F] [G]<br>CLAD 2024-T3 |
| 5 [B] | DOUBLER | 2 | 0.063 [E] OR<br>0.050 [F] [G]<br>CLAD 2024-T3 |

TABLE I

Vertical Stabilizer Access Panel Installation
Figure 4 (Sheet 2)


BOEING PROPRIETARY - Copyright © - Unpublished Work - See title page for details.

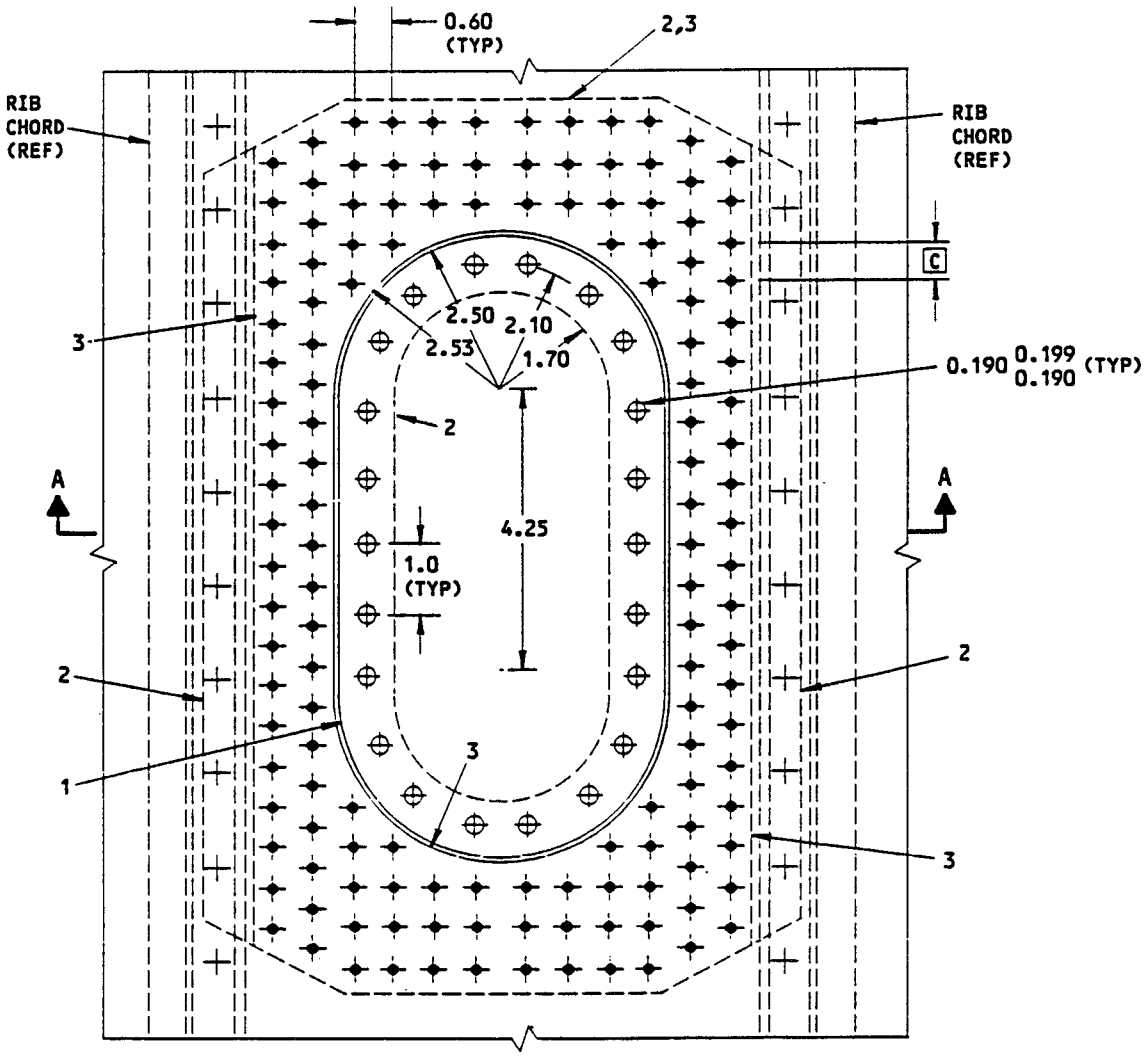


DETAIL I A

Vertical Stabilizer Access Panel Installation
Figure 4 (Sheet 3)

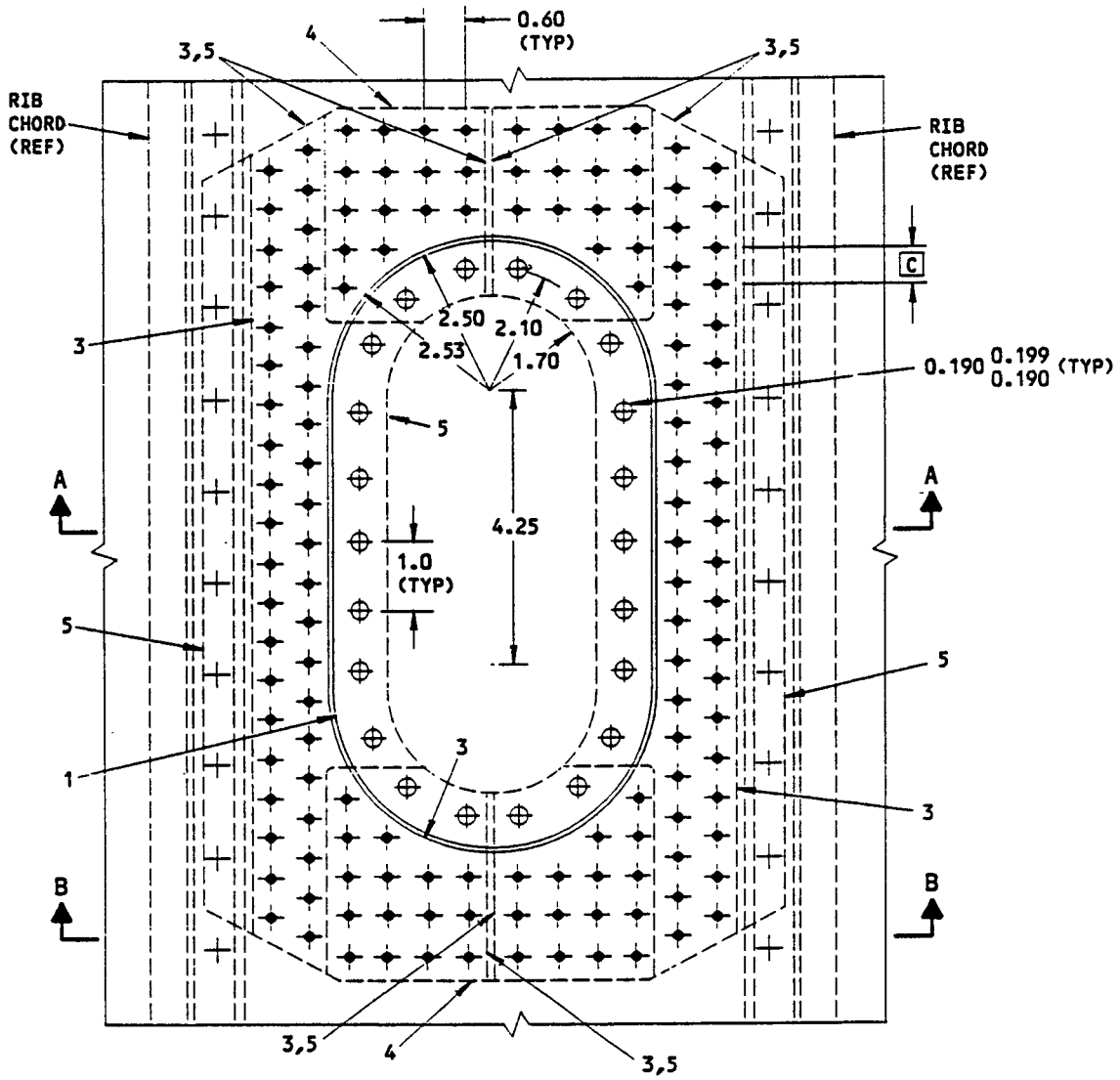


DETAIL II

Vertical Stabilizer Access Panel Installation
Figure 4 (Sheet 4)

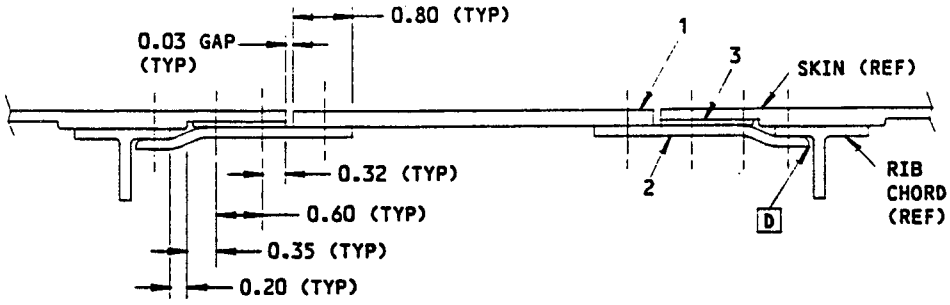


SECTION A-A E

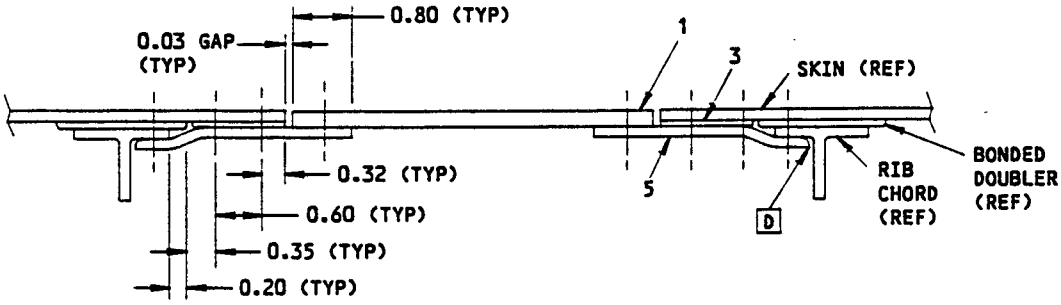


SECTION A-A F

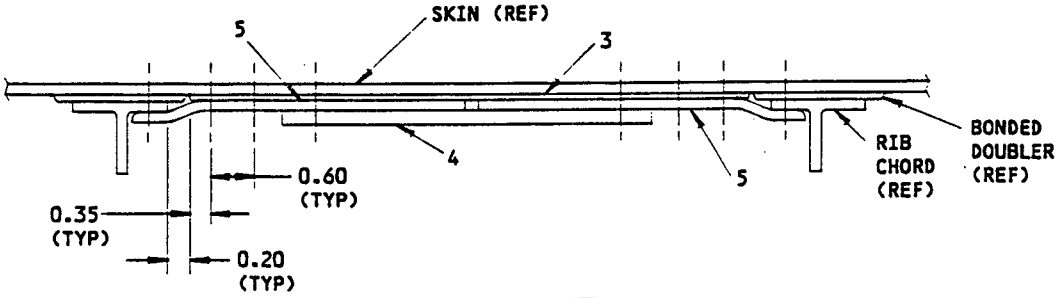


SECTION B-B F

Vertical Stabilizer Access Panel Installation
Figure 4 (Sheet 5)

## APPLICABILITY

THIS REPAIR IS APPLICABLE TO THE INSPAR RIB CHORDS FROM FIN STATION 57.77 TO 299.25.

## REPAIR INSTRUCTIONS

1. Remove the leading edge skin panels, inspar skin access doors, or inspar skin panels as necessary to get access.
2. Remove the rib chord damage by one of the two subsequent methods.
   (a) If a crack is found, drill 0.25 inch diameter holes at the ends of any crack that does not stop at a fastener hole.
   (b) If the damage is greater than the allowable damage limits given in SRM 55-30-1, refer to steps 3 thru 15 to repair the rib chord.
3. Cut out the damaged part of the chord.
4. Make the repair parts. Refer to Table I and Detail II.
5. Remove any adjacent structure and fasteners as necessary to install the repair parts.
6. Put the repair parts into position. Drill the fastener holes.
7. Remove the repair parts.
8. Remove all of the nicks, scratches, gouges, burrs, and sharp edges from the chord and the repair parts.
9. Apply a chemical conversion coating to the repair parts and the bare edges of the chord. Refer to SRM 51-10-2.
10. Apply one layer of BMS 10-11, Type I primer to the repair parts and the bare edges of the chord.
11. Install the repair parts and any structure that was removed with BMS 5-95 sealant between the faying surfaces. Install the fasteners through the web attachment flange with BMS 5-95 sealant.
12. Fill the gaps between the filler (repair part 1 or 5) and the chord with BMS 5-95 sealant.
13. Apply a finish to the repair area. Refer to AMM 51-21.
14. Install the skins that were removed with BMS 5-95 between the faying surfaces. Install the fasteners through the skin wet with BMS 5-95 sealant.
15. Apply an external finish as necessary. Refer to AMM 51-21.

## NOTES

- THIS REPAIR WILL NOT HAVE AN EFFECT ON A STRUCTURALLY SIGNIFICANT ITEM (SSI) GIVEN IN SRM 51-00-4, FIG. 3. THUS, NO CHANGE TO THE SUPPLEMENTAL STRUCTURAL INSPECTION DOCUMENT (SSID) INSPECTION PROGRAM IS NECESSARY.
- WHEN YOU USE THIS REPAIR, REFER TO:
  - AMM 51-21 FOR INTERIOR AND EXTERIOR FINISHES
  - SRM 51-10-1 FOR INVESTIGATION AND CLEANUP OF DAMAGE
  - SRM 51-10-2 FOR PROTECTIVE TREATMENT OF METAL
  - SRM 51-20-1 FOR MINIMUM BEND RADII
  - SRM 51-20-4 FOR SEALING OF REPAIRS
  - SRM 51-30 FOR FASTENER CODE, REMOVAL, INSTALLATION, HOLE SIZES AND EDGE MARGINS.

[A] REFER TO TABLE II OR TABLE III FOR THE GAGE OF THE REPAIR PARTS.

[B] REFER TO TABLE II OR TABLE III FOR THE MINIMUM NUMBER OF FASTENERS PER INCH OF FLANGE WIDTH THAT ARE NECESSARY ON EACH SIDE OF THE SPLICE.

[C] WHEN THE NUMBER OF FASTENERS NECESSARY IS CALCULATED, USE THE NEXT HIGHER WHOLE NUMBER.

[D] USE THE SAME THICKNESS AS THE THICKNESS OF THE FLANGE OF THE INITIAL CHORD.

[E] FILL THE GAP AT EACH CUT LOCATION WITH BMS 5-95 SEALANT.

[F] REFER TO SRM 51-20-1 FOR THE MINIMUM INSIDE BEND RADIUS.

[G] BEND THE REPAIR ANGLEA IN THE ANNEALED CONDITION AND THEN HEAT TREAT TO THE SPECIFICATION SHOWN.

[H] FOR THE ALTERNATE REPAIR ONLY. FOR THE RECOMMENDED REPAIR, USE REPAIR PART 2.

[I] USE THE RECOMMENDED REPAIR ONLY.

[J] REFER TO DETAIL I FOR THE DEFINITION OF THE WIDTH OF THE DAMAGED FLANGE TO BE USED TO CALCULATE THE ACTUAL FASTENER REQUIREMENTS.

[K] TABLE II IS ONLY APPLICABLE WHEN BACR15CE()D OR BACR15BB()D REPAIR FASTENERS ARE USED. SEE TABLE III WHEN BACB30MY OR BACB30NW REPAIR FASTENERS ARE USED.

[L] TABLE III IS ONLY APPLICABLE WHEN BACB30MY OR BACB30NW REPAIR FASTENERS ARE USED. SEE TABLE II WHEN BACR15CE()D OR BACR15BB()D REPAIR FASTENERS ARE USED.

[M] REPAIR PARTS 3 AND 4 CAN BE USED AS AN ALTERNATIVE TO REPAIR PART 2 IN SOME AREAS. REFER TO TABLE II [K] OR TABLE III [L] TO SEE IF REPAIR PARTS 3 AND 4 CAN BE USED AS AN ALTERNATIVE.

Vertical Stabilizer Inspar Rib Chord Repair
Figure 1 (Sheet 1)


BOEING PROPRIETARY - Copyright © - Unpublished Work - See title page for details.

FASTENER SYMBOLS

- ORIGINAL WEB ATTACHMENT FASTENER LOCATION. INSTALL A 1/32 OVERSIZE BACR15BB()D RIVET (REFER TO TABLE II), OR INSTALL A 1/64 OVERSIZE BACB30MY()K HEX DRIVE BOLT (REFER TO TABLE III) WITH A BACC30M COLLAR
- ORIGINAL SKIN ATTACHMENT FASTENER LOCATION. INSTALL A 1/32 OVERSIZE BACR15CE()D RIVET (REFER TO TABLE II), OR INSTALL A 1/64 OVERSIZE BACB30NW()K HEX DRIVE BOLT (REFER TO TABLE III) WITH A BACC30M COLLAR

| REPAIR MATERIAL | | | |
|---|---|---|---|
| PART | | QTY | MATERIAL |
| 1 | FILLER - ANGLE | 1 | MAKE FROM THE SAME EXTRUSION AS THE ORIGINAL CHORD 7075-T6 |
| 2 [M] | ANGLE | 1 | MAKE FROM AN EXTRUSION ONE GAGE THICKER THAN THE ORIGINAL CHORD 7075-T6 |
| 3 [M] | ANGLE | 1 | 7075-TO HT TR TO T6 [A] [F] [G] |
| 4 [M] | ANGLE | 1 | 7075-TO HT TR TO T6 [A] [F] [G] |
| 5 | FILLER - TEE | 1 | MAKE FROM THE SAME EXTRUSION AS THE ORIGINAL CHORD 7075-T6 |
| 6 | PLATE | 1 | 7075-T6 [D] |

TABLE I

| CHORD THICKNESS | GAGE OF REPAIR PARTS 3 AND 4 [H] | FASTENERS PER INCH (MULTIPLY THE WIDTH OF THE DAMAGED FLANGE BY THE NUMBER SHOWN BELOW TO CALCULATE THE ACTUAL FASTENER REQUIREMENTS) [C] [J] | |
|---|---|---|---|
| | | 5/32 DIA | 3/16 DIA |
| 0.040 | [I] | 7.0 | 6.0 |
| 0.050 | [I] | 7.1 | 6.1 |
| 0.060 | 0.040 | 7.2 | 6.2 |
| 0.063 | 0.040 | 7.3 | 6.3 |
| 0.070 | 0.040 | 7.4 | 6.4 |
| 0.080 | 0.050 | 8.8 | 6.5 |
| 0.100 | 0.071 | 11.0 | 7.5 |

TABLE II [K]

Vertical Stabilizer Inspar Rib Chord Repair
Figure 1 (Sheet 2)

| CHORD THICKNESS | GAGE OF REPAIR PARTS 3 AND 4 [H] | FASTENERS PER INCH (MULTIPLY THE WIDTH OF THE DAMAGED FLANGE BY THE NUMBER SHOWN BELOW TO CALCULATE THE ACTUAL FASTENER REQUIREMENTS) [C] [J] |
|---|---|---|
| | | 3/16 DIA |
| 0.050 | [I] | 4.0 |
| 0.060 | [I] | 4.0 |
| 0.063 | [I] | 4.0 |
| 0.070 | [I] | 4.0 |
| 0.080 | 0.050 | 4.0 |
| 0.100 | 0.071 | 4.0 |

TABLE III [L]

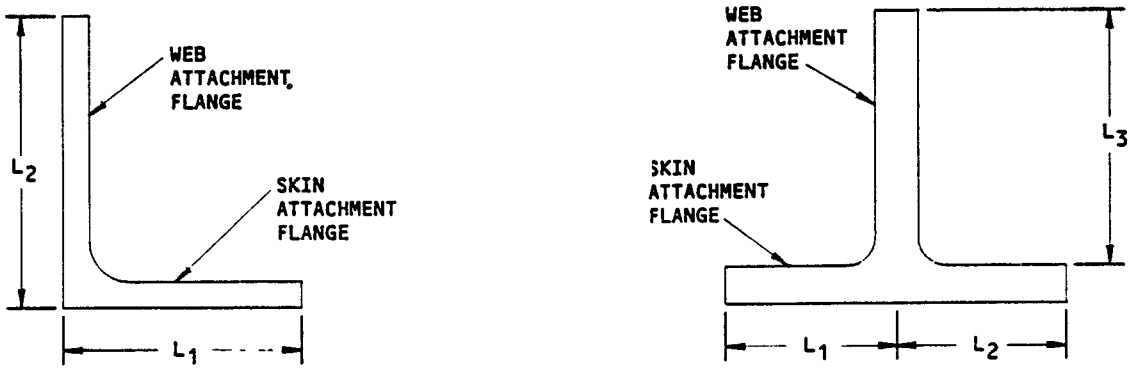


ANGLE CHORD

TEE CHORD

$L_1$, $L_2$, $L_3$ = WIDTH OF THE DAMAGED FLANGE USED TO CALCULATE THE NUMBER OF FASTENERS THAT ARE NECESSARY ON EACH SIDE OF THE SPLICE

DEFINITION OF THE WIDTH OF THE DAMAGED FLANGE
DETAIL I

Vertical Stabilizer Inspar Rib Chord Repair
Figure 1 (Sheet 3)

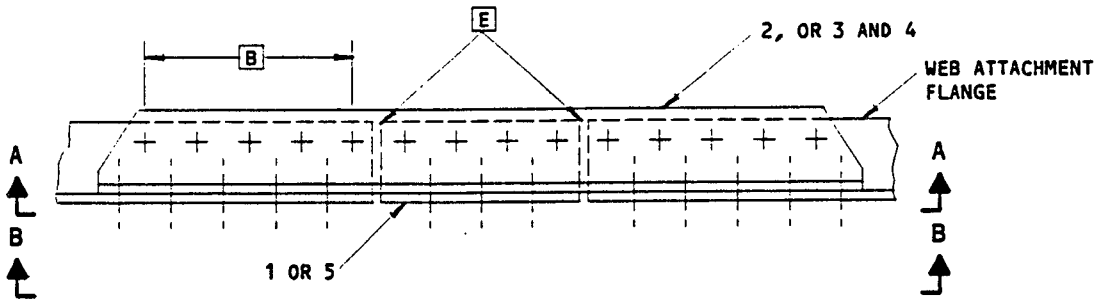


SIDE VIEW
DETAIL II

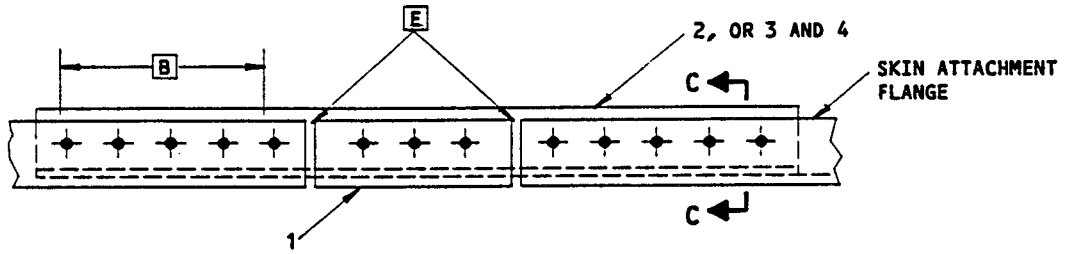


ANGLE REPAIR
SECTION A-A

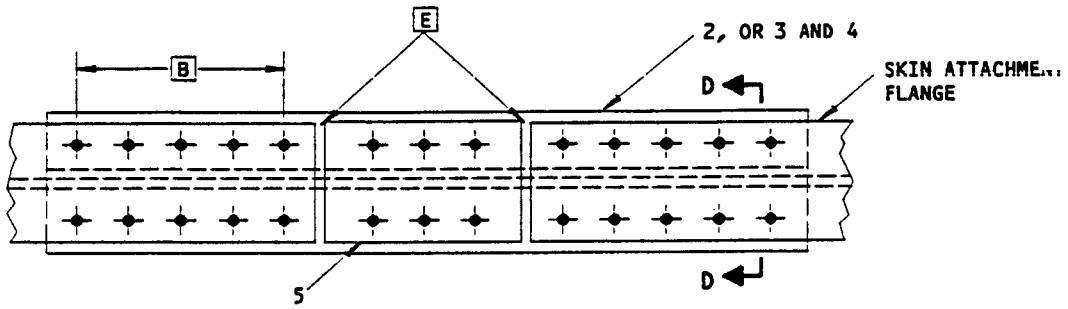


TEE SECTION REPAIR
SECTION B-B

Vertical Stabilizer Inspar Rib Chord Repair
Figure 1 (Sheet 4)

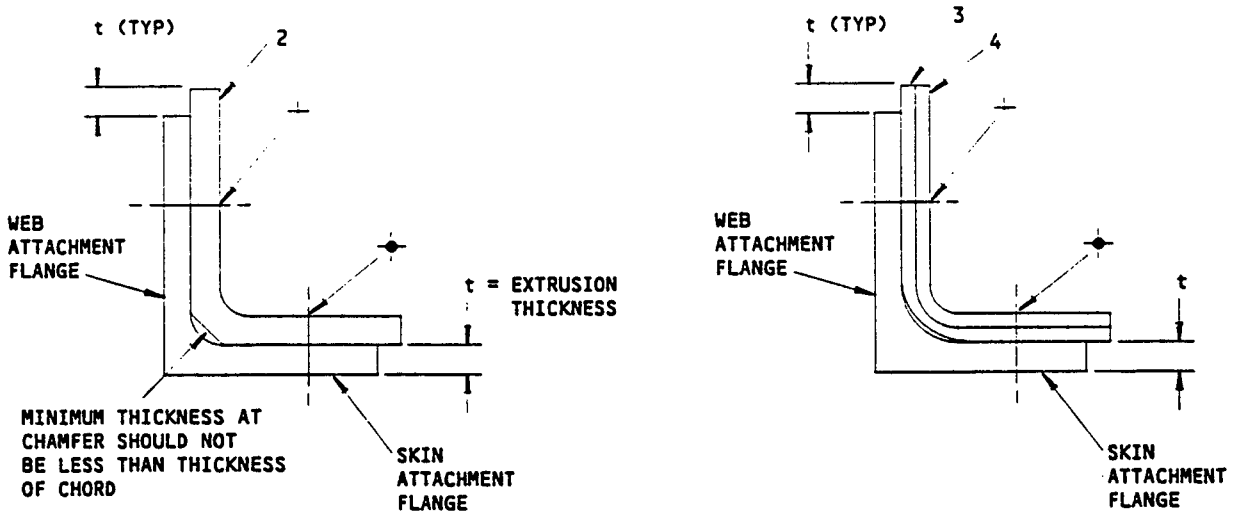


PREFERRED

ALTERNATE

SECTION C-C

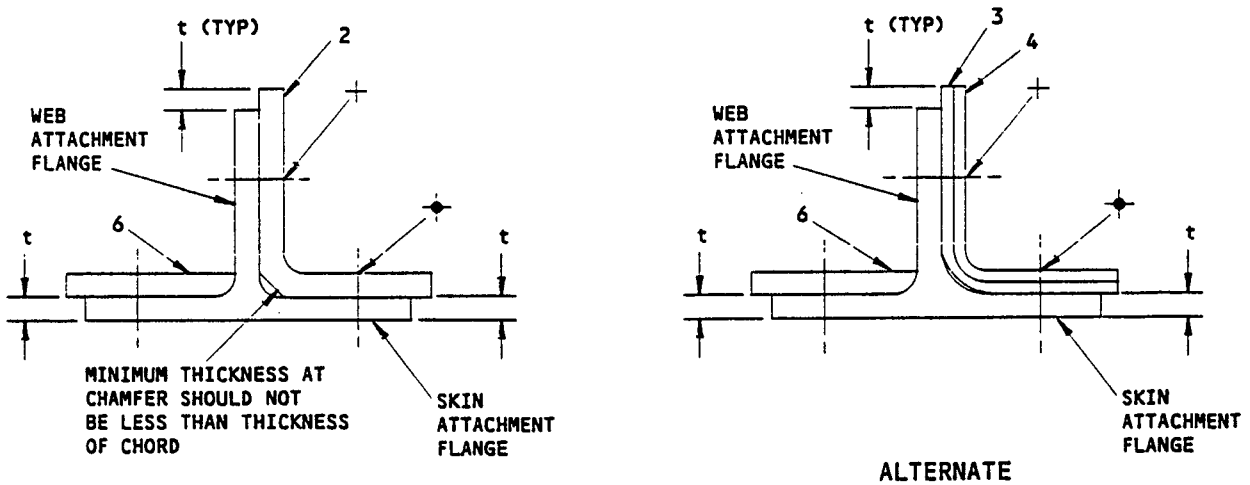


PREFERRED

ALTERNATE

SECTION D-D

Vertical Stabilizer Inspar Rib Chord Repair
Figure 1 (Sheet 5)

## REPAIR INSTRUCTIONS

1. Remove leading edge skin panels, inspar skin access doors or inspar skin panels as required.
2. Remove inspar skin rivets along front spar and rib flanges and roll back the skin as required to gain access to damaged rib web.
3. Stop drill 0.25 inch diameter hole at end of all cracks that do not end in a fastener hole or cutout damaged web as shown.
4. Remove all burrs, nicks, scratches, sharp edges or corners from the damaged web and all repair parts.
5. Remove web stiffeners and all web fasteners as required to install part [1].
6. Cut out repair part [1] and locate and drill fastener holes to match initial locations. Cut hole in repair part to clear web flanged hole. See optional cut in web.
7. Bond and rivet part [1] to rib web as outlined in SRM 51-40-5 and install stiffeners in their initial locations.
8. After completion of bonding and riveting step 7, refinish as given in AMM 51-21-0.
9. Replace removed skins, access panels, leading edge skins and all fasteners.
10. Restore exterior finish as given in AMM 51-21-0.

## NOTES

- THIS REPAIR WILL NOT HAVE AN EFFECT ON A STRUCTURALLY SIGNIFICANT ITEM (SSI) GIVEN IN SRM 51-00-4, FIG. 3. THUS, NO CHANGE TO THE SUPPLEMENTAL STRUCTURAL INSPECTION DOCUMENT (SSID) INSPECTION PROGRAM IS NECESSARY.
- THIS REPAIR IS APPLICABLE FOR ALL RIB WEB REPAIRS.
- REFER TO SRM 51-10-1 FOR INVESTIGATION AND CLEANUP OF DAMAGE.
- REFER TO SRM 51-30 FOR FASTENER CODE, REMOVAL AND INSTALLATION, HOLE SIZES AND EDGE MARGINS.
- REFER TO SRM 51-10-2 FOR METAL PROTECTIVE TREATMENT.
- REFER TO SRM 51-30 FOR MINIMUM EDGE MARGINS.

## FASTENER SYMBOLS

+ INITIAL FASTENER LOCATIONS

⊕ REPAIR FASTENER LOCATIONS

[A] USE SAME TYPE AND SIZE FASTENER AT SAME SPACING AS USED FOR CHORD TO WEB ATTACHMENTS.

[B] REPLACE INITIAL FASTENER WITH FASTENER OF SAME SIZE AND TYPE AS USED FOR CHORD TO WEB ATTACHMENTS.

[C] USE SAME MATERIAL AS INITIAL WEB PLUS THE FOLLOWING.

| INITIAL WEB | REPAIR |
|---|---|
| SINGLE THICKNESS WEB GAGE | USE GAGE EQUAL TO OR ONE GAGE GREATER |
| BONDED 2-PLY WEB IF 0.010 INCH PLY | USE SINGLE GAGE 0.032 INCH MINIMUM |
| BONDED 2-PLY WEB IF 0.016 INCH PLY | USE ONE GAGE GREATER THAN THE TOTAL THICKNESS |

Vertical Stabilizer Inspar Rib Web Repair
Figure 2 (Sheet 1)


BOEING PROPRIETARY - Copyright © - Unpublished Work - See title page for details.

| REPAIR MATERIAL | | | |
|---|---|---|---|
| PART | | QTY | MATERIAL |
| 1 | PLATE | 1 | C |

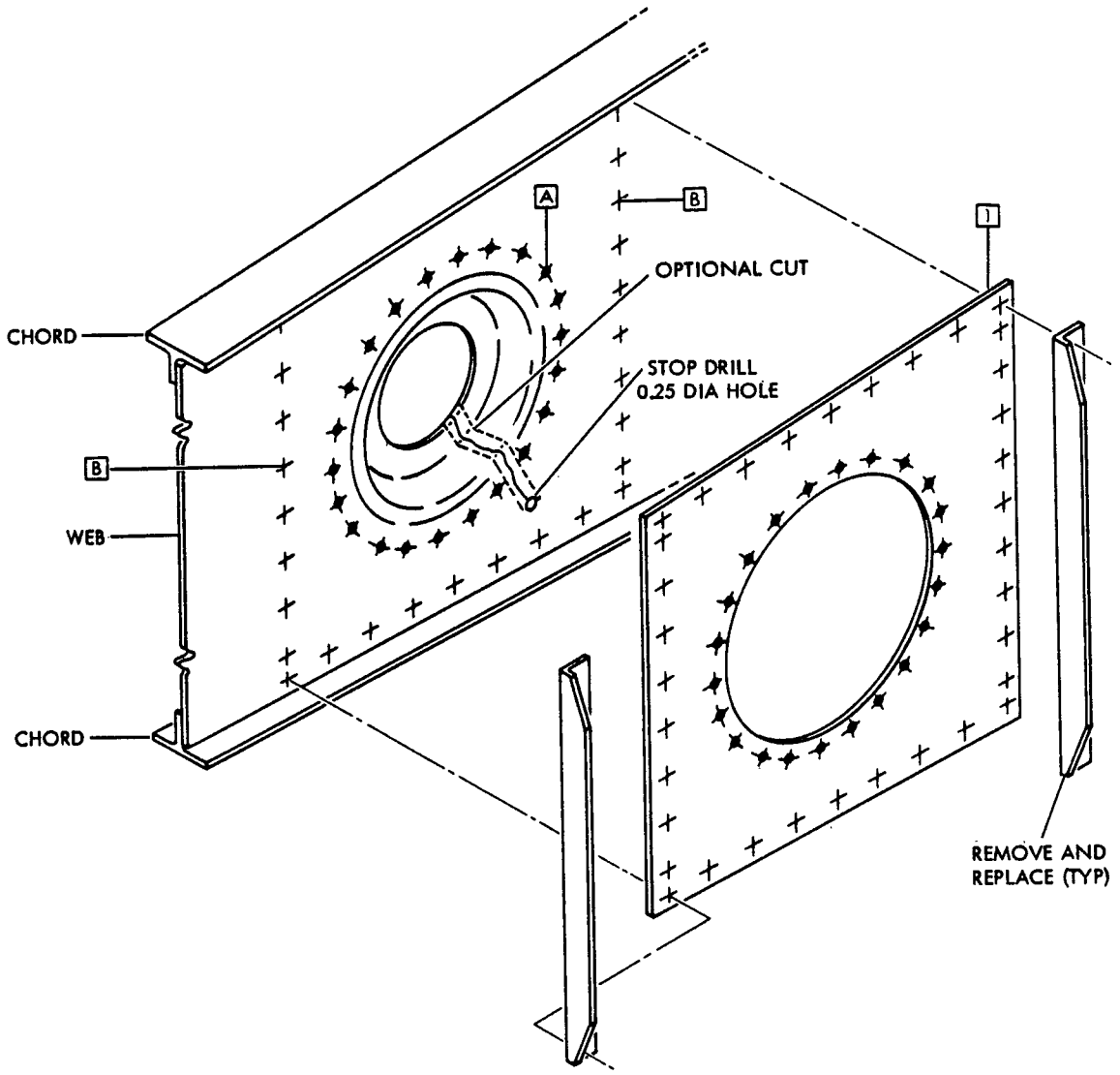


Vertical Stabilizer Inspar Rib Web Repair
Figure 2 (Sheet 2)

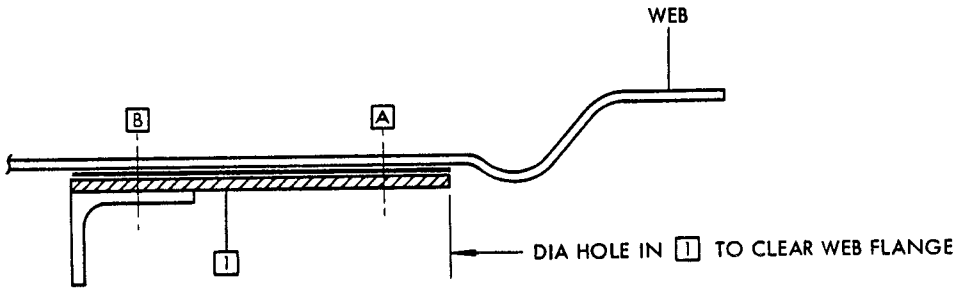


SECTION THROUGH REPAIR

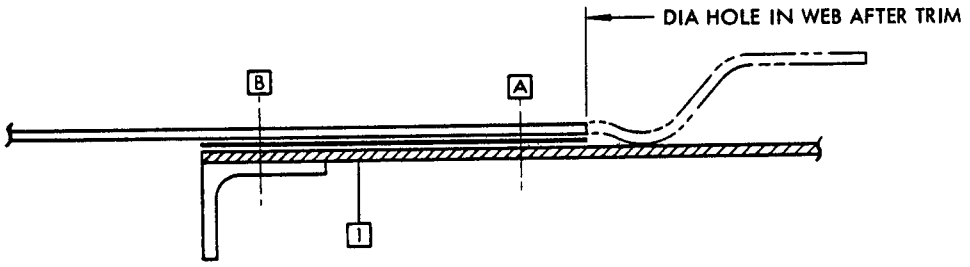


OPTIONAL SECTION THROUGH REPAIR

Vertical Stabilizer Inspar Rib Web Repair
Figure 2 (Sheet 3)

## REPAIR INSTRUCTIONS

1. Remove the leading edge skin assembly and interspar skin fasteners across the ribs and front spar as necessary. Roll the skin back to gain access to the damage.
2. Drill 0.25 inch diameter stop holes at the ends of all cracks that do not end at a fastener hole.
3. Remove the web stiffener and fasteners as necessary to install the repair part [1] doubler on the chords and the damaged web.
4. Make the part [1] doubler.
5. Drill the fastener holes.
6. Remove the repair part [1] doubler.
7. Remove all nicks, scratches, sharp edges and corners from the damage area and the repair part [1] doubler.
8. Apply a chemical conversion coating to the part 1 doubler and the bare surfaces of the initial parts.
9. Bond and install fasteners through the repair part [1] doubler and the web as given in SRM 51-40-05.

   Note: Repairs that are bonded and riveted are recommended over riveted repairs that are not bonded.
10. Install the web stiffeners again.
11. Apply the finish as given in AMM 51-21-0.

## NOTES

- THIS REPAIR COULD HAVE AN EFFECT ON A STRUCTURALLY SIGNIFICANT ITEM (SSI) GIVEN IN SRM 51-00-4, FIG. 3. BUT, NO CHANGE TO THE SUPPLEMENTAL STRUCTURAL INSPECTION DOCUMENT (SSID) INSPECTION PROGRAM IS NECESSARY.
- REFER TO SRM 51-30 FOR FASTENER CODE, REMOVAL AND INSTALLATION, HOLE SIZES AND EDGE MARGINS.
- REFER TO SRM 51-10-2 FOR METAL PROTECTIVE TREATMENT.

[A] REPLACE THE INITIAL FASTENERS WITH FASTENERS OF THE SAME SIZE AND TYPE AS USED ON THE INITIAL INSTALLATION.

[B] SAME SPACING AS WEB STIFFENER FASTENERS

[C] SAME SPACING AS FRONT SPAR WEB TO CHORD FASTENERS

[D] MINIMUM EDGE MARGIN AS GIVEN IN SRM 51-30

## FASTENER SYMBOLS

+ INITIAL FASTENER LOCATIONS

-◆- REPAIR FASTENER LOCATIONS

| REPAIR MATERIAL | | | |
|---|---|---|---|
| PART | | QTY | MATERIAL |
| 1 | DOUBLER | 1 | 0.071 INCH THICK CLAD 7075-T6 |

Vertical Stabilizer Front Spar Web Repair
Figure 1 (Sheet 1)


BOEING PROPRIETARY - Copyright © - Unpublished Work - See title page for details.

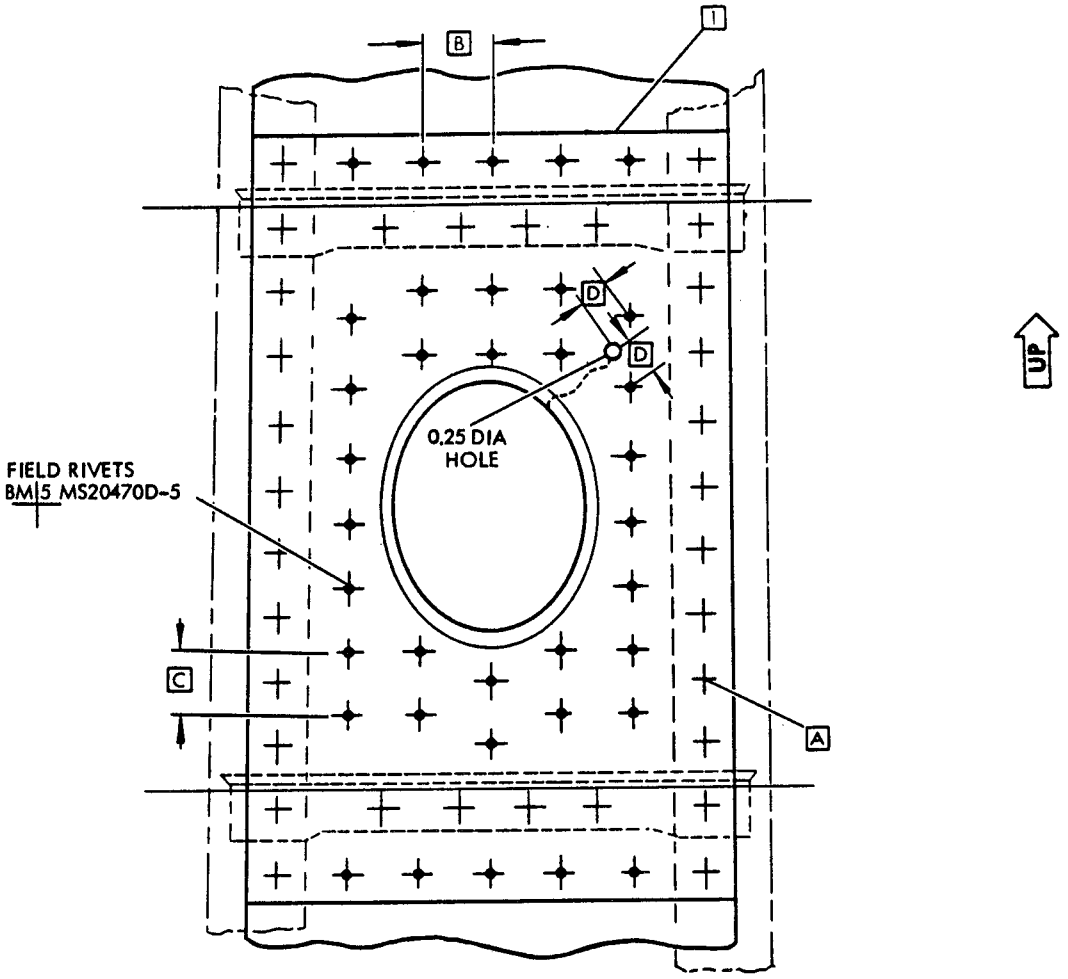


FRONT VIEW

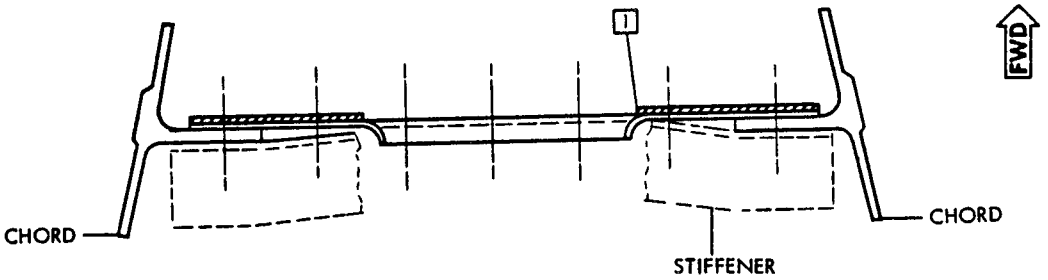


SECTION THROUGH REPAIR

Vertical Stabilizer Front Spar Web Repair
Figure 1 (Sheet 2)

## REPAIR INSTRUCTIONS

1. Drill 0.25 inch diameter stop holes at the ends of all cracks that do not end at a fastener hole.
2. Remove the web stiffener and skin fasteners as necessary, and roll back the skin to get access to the forward side of the spar.
3. Make the part [1] doubler.
4. Drill the fastener holes in the part [1] doubler to match the initial fastener holes in the web and chords.
5. Remove all nicks, scratches, burrs and sharp edges from the initial and repair parts.
6. Apply a chemical conversion coating to the repair parts and the bare surfaces of the initial parts. Refer to SRM 51-10-2.
7. Bond and install fasteners through the repair part [1] doubler and the web as given in SRM 51-40-05.

   NOTE: Repairs that are bonded and riveted are recommended over riveted repairs that are not bonded.
8. Install the web stiffeners again.
9. Apply the interior finish as given in AMM 51-21-0.
10. Install the removed skin again. Use fasteners that are the same type and size as the initial fasteners.
11. Apply the exterior finish as given in AMM 51-21-0.

## NOTES

- THIS REPAIR COULD HAVE AN EFFECT ON A STRUCTURALLY SIGNIFICANT ITEM (SSI) GIVEN IN SRM 51-00-4, FIG. 3. BUT, NO CHANGE TO THE SUPPLEMENTAL STRUCTURAL INSPECTION DOCUMENT (SSID) INSPECTION PROGRAM IS NECESSARY.
- REFER TO SRM 51-10-1 FOR INVESTIGATION AND CLEANUP OF DAMAGE.
- REFER TO SRM 51-30 FOR FASTENER CODE, REMOVAL AND INSTALLATION, HOLE SIZES AND EDGE MARGINS.
- REFER TO SRM 51-10-2 FOR METAL PROTECTIVE TREATMENT.

[A] USE THE SAME RIVET SIZE, FOR TYPE AND SPACING AS NECESSARY FOR THE WEB TO CHORD RIVETS. IF TWO ROWS OF RIVETS ARE USED ON THE CHORD, THEN EXTEND PART [1] AND PART [2] BEYOND THE WEB STIFFENER TO INCLUDE AN EXTRA ROW OF RIVETS.

[B] USE THE SAME TYPE FASTENER AS USED FOR WEB TO CHORD FASTENERS. CHANGE MS20470D5 TO MS20470D6 AS NECESSARY.

[C] MINIMUM EDGE MARGIN AS GIVEN IN SRM 51-30.

[D] SAME SPACING AS WEB STIFFENER FASTENER SPACING

## FASTENER SYMBOLS

+ INITIAL FASTENER LOCATION

⊕ REPAIR FASTENER LOCATION

Vertical Stabilizer Rear Spar Web Repair
Figure 2 (Sheet 1)


BOEING PROPRIETARY - Copyright © - Unpublished Work - See title page for details.

| REPAIR MATERIAL | | | | | | | |
|---|---|---|---|---|---|---|---|
| LOCATION → | | FIN STA 58.68 TO 73.50 | | FIN STA 73.50 TO 140.00 | | FIN STA 140.00 TO 175.00 | |
| PART | | QTY | MATERIAL | QTY | MATERIAL | QTY | MATERIAL |
| 1 | DOUBLER | 1 | 0.120 CLAD 7075-T6 | 1 | 0.085 CLAD 7075-T6 | 1 | 0.056 CLAD 7075-T6 |

| REPAIR MATERIAL | | | | | | | |
|---|---|---|---|---|---|---|---|
| LOCATION → | | FIN STA 175.00 TO 229.15 | | FIN STA 229.15 TO 301.90 | | | |
| PART | | QTY | MATERIAL | QTY | MATERIAL | QTY | MATERIAL |
| 1 | DOUBLER | 1 | 0.045 CLAD 7075-T6 | 1 | 0.036 CLAD 7075-T6 | | |

Vertical Stabilizer Rear Spar Web Repair
Figure 2 (Sheet 2)

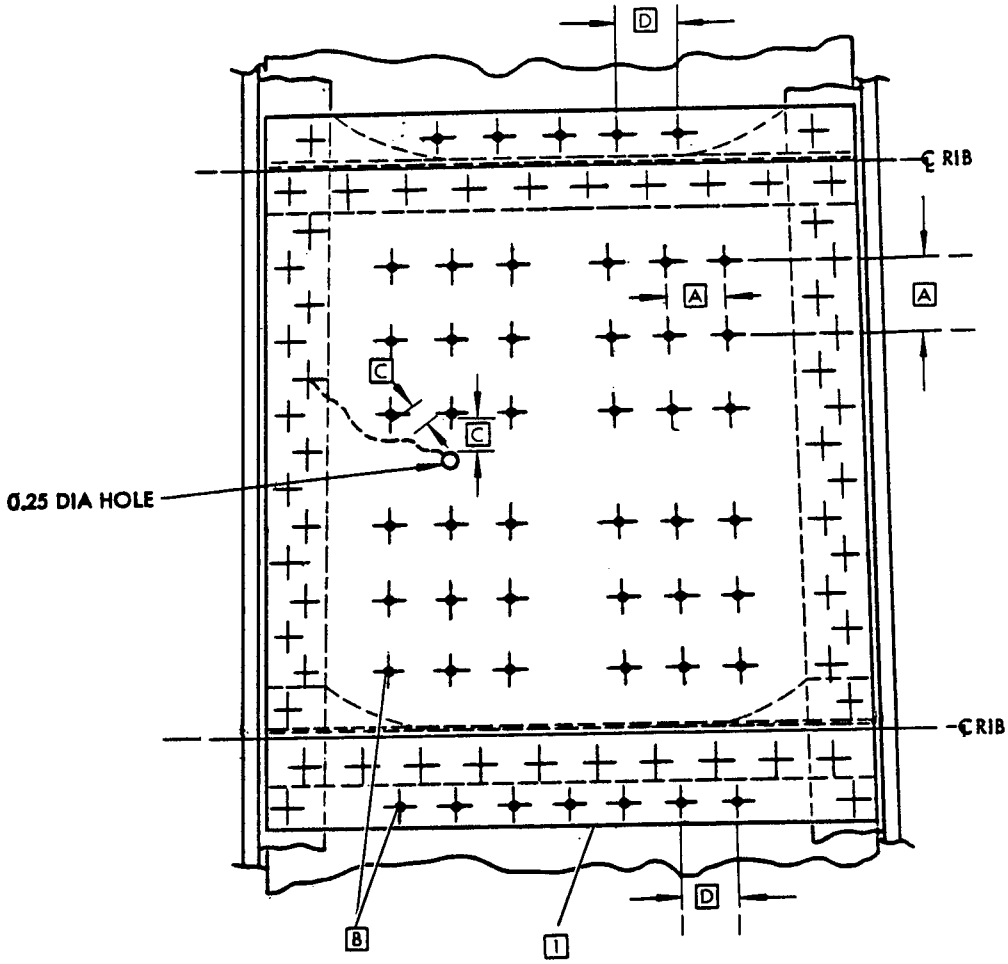
D
℄ RIB
A
A
C
C
0.25 DIA HOLE
℄ RIB
D
B
1

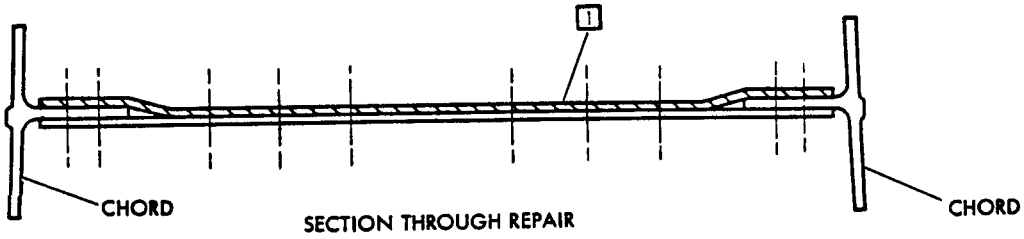
1
CHORD
CHORD
SECTION THROUGH REPAIR

## REPAIR INSTRUCTIONS

1. For crack in the skin, drill 0.25 inch stop holes at the ends of all the cracks that do not go into a fastener hole.
2. For other damage, cut out the damage. Make a hole with its major axis parallel to the leading edge ribs.

   Note: The maximum cutout must permit a minimum of two rows of fasteners around the cutout.
3. Make the part [1] plate. Refer to Table I.
4. Break all the sharp edges on the initial parts and the part [1] plate to a 0.015 inch to 0.030 inch radius.
5. Remove all the nicks, gouges, and scratches from the skin and the part [1] plate.
6. Put all the indented and projected skin back to its initial contour.
7. Assemble the repair parts and drill the fastener holes as shown in Detail I.
8. Apply a chemical conversion coating to the part [1] plate and the skin surfaces and edges.
9. Install the part [1] plate. Make a mating surface seal between the repair plate and the leading edge skin with BMS 5-95 sealant as given in SRM 51-20-4.
10. Install the fasteners wet with BMS 5-95 sealant.
11. Apply BMS 5-95 sealant as given in SRM 51-20-4.
12. Apply the finish as given in AMM 51-21.

## NOTES

- THIS REPAIR WILL NOT HAVE AN EFFECT ON A STRUCTURALLY SIGNIFICANT ITEM (SSI) GIVEN IN SRM 51-00-4, FIG. 3. BUT, NO CHANGE TO THE SUPPLEMENTAL STRUCTURAL INSPECTION DOCUMENT (SSID) INSPECTION PROGRAM IS NECESSARY.
- DO AN INSPECTION OF BLIND RIVET REPAIRS AT EACH B-CHECK, OR EVERY 6 MONTHS. REPLACE ALL BLIND RIVET REPAIRS WITH FLUSH REPAIRS AT THE SUBSEQUENT C-CHECK.
- WHEN YOU USE THIS REPAIR, REFER TO:
  - AMM 51-21 FOR INTERIOR AND EXTERIOR FINISHES
  - SRM 51-10-1 FOR INVESTIGATION AND CLEANUP OF DAMAGE
  - SRM 51-10-2 FOR PROTECTIVE TREATMENT OF METAL
  - SRM 51-20-4 FOR REPAIR SEALING
  - SRM 51-30 FOR FASTENER CODE, INSTALLATION AND REMOVAL, HOLE SIZES, AND EDGE MARGINS
  - SRM 51-70 FOR AERODYNAMIC SMOOTHNESS REQUIREMENTS.
- D = FASTENER DIAMETER

## FASTENER SYMBOLS

REPAIR FASTENER LOCATIONS

| REPAIR MATERIAL | | | |
|---|---|---|---|
| PART | | QTY | MATERIAL |
| 1 | PLATE | 1 | 0.063 INCH THICK CLAD 2024-T3 OR 2024-T4 |

TABLE I

Vertical Stabilizer Leading Edge Skin - External Repair
Figure 1 (Sheet 1)


BOEING PROPRIETARY - Copyright © - Unpublished Work - See title page for details.

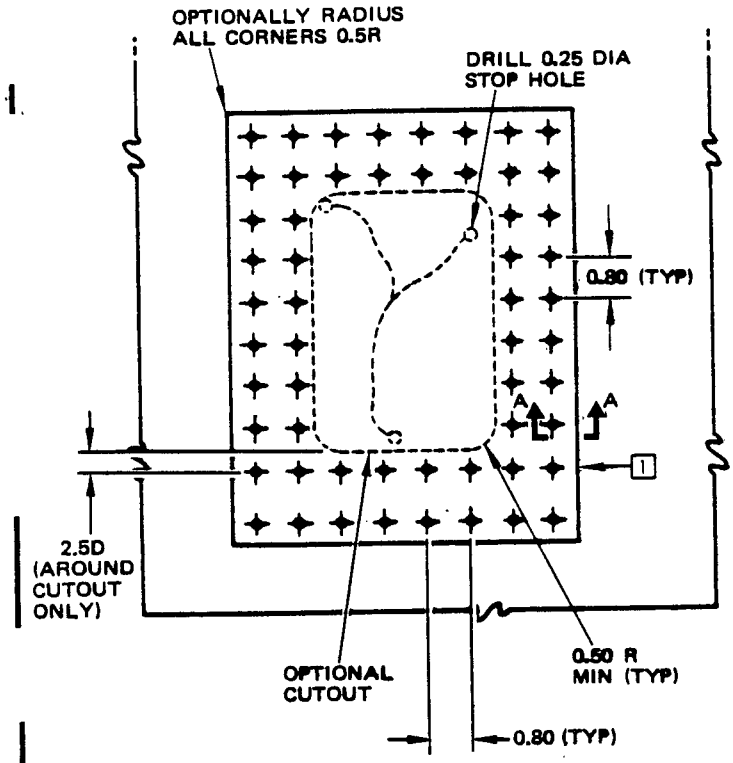


TYPICAL REPAIR
DETAIL I

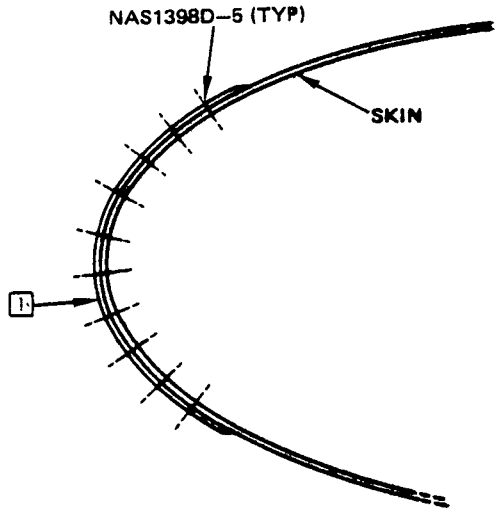


SECTION THROUGH REPAIR

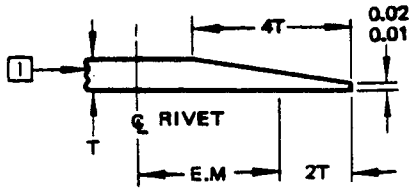


DETAIL OF CHAMFER
SECTION A–A

Vertical Stabilizer Leading Edge Skin - External Repair
Figure 1 (Sheet 2)

## REPAIR INSTRUCTIONS

1. Remove the damaged leading edge section.
2. If an external repair has previously been installed, remove the fasteners as given in SRM 51-30-2, the external plate and all sealant material.
3. Cut out the damaged skin. Cut a hole with its major axis parallel to the leading edge ribs.
4. Make the repair parts. Refer to Table I.
5. Remove all the nicks, scratches, burrs, and sharp edges from the skin and repair parts.
6. Put all the indented or projecting skin back to the initial contour.
7. Assemble the repair parts and drill the fastener holes as shown in Detail I. If an external repair part is being replaced, drill the fastener holes in the part 1 plate to match the initial hole locations in the skin.
8. Apply a chemical conversion coating to the repair parts and the bare surfaces of the skin.
9. Install the repair parts. Make a mating surface seal between the repair parts and the leading edge skin with BMS 5-95 as given in SRM 51-20-4.
10. Install the fasteners wet with BMS 5-95 sealant.
11. Apply BMS 5-95 in the gaps as given in SRM 51-20-4.
12. Apply the finish as given in AMM 51-21.

## NOTES

- THIS REPAIR WILL NOT HAVE AN EFFECT ON A STRUCTURALLY SIGNIFICANT ITEM (SSI) GIVEN IN SRM 51-00-4, FIG. 3. THUS, NO CHANGE TO THE SUPPLEMENTAL STRUCTURAL INSPECTION DOCUMENT (SSID) INSPECTION PROGRAM IS NECESSARY.
- WHEN YOU DO THIS REPAIR, REFER TO:
  - AMM 51-21 FOR INTERIOR AND EXTERIOR FINISHES
  - SRM 51-10-1 FOR INVESTIGATION AND CLEANUP OF DAMAGE
  - SRM 51-10-2 FOR PROTECTIVE TREATMENT OF METAL
  - SRM 51-20-4 FOR REPAIR SEALING
  - SRM 51-30 FOR FASTENER CODE, INSTALLATION AND REMOVAL, HOLE SIZES, AND EDGE MARGINS
  - SRM 51-70 FOR AERODYNAMIC SMOOTHNESS REQUIREMENTS.
- D = FASTENER DIAMETER

## FASTENER SYMBOLS

REPAIR FASTENER LOCATIONS

| REPAIR MATERIAL | | | |
|---|---|---|---|
| LOCATION → | | L.E. STA 62.375 TO L.E. STA 301.43 | |
| PART | | QTY | MATERIAL |
| 1 | PLATE | 1 | 0.063 INCH THICK CLAD 2024-T3 |
| 2 | FILLER | 1 | 0.040 INCH THICK CLAD 2024-T3 |

TABLE I

Vertical Stabilizer Leading Edge Skin Flush Repair
Figure 2 (Sheet 1)


BOEING PROPRIETARY - Copyright © - Unpublished Work - See title page for details.

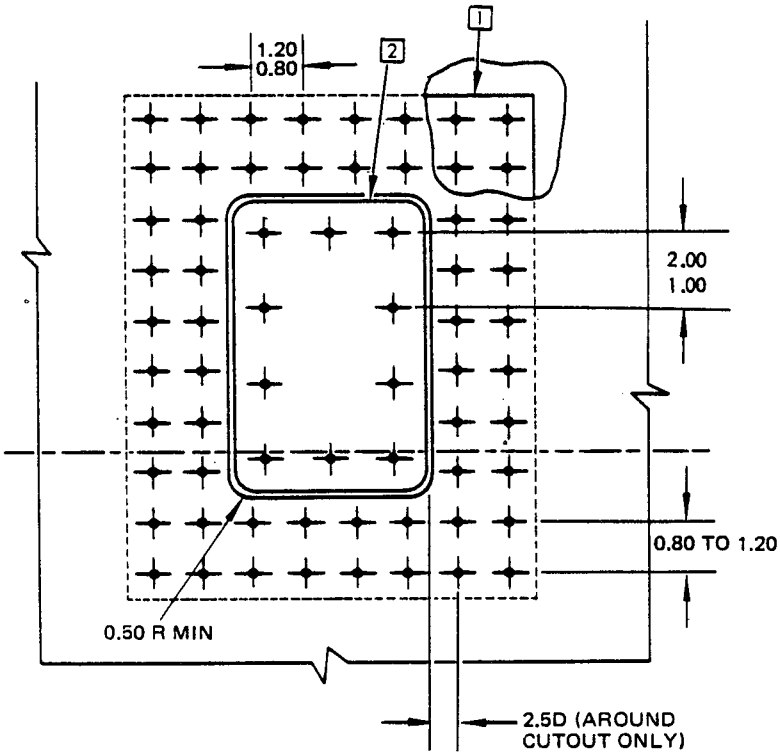


TYPICAL REPAIR
DETAIL I

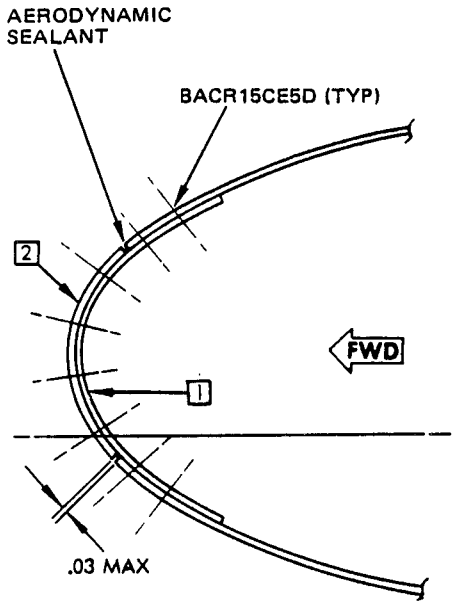


SECTION THROUGH REPAIR

Vertical Stabilizer Leading Edge Skin Flush Repair
Figure 2 (Sheet 2)

| APPLICABILITY |
| --- |
| THIS REPAIR IS APPLICABLE TO THE VERTICAL STABILIZER RUDDER HINGE SUPPORT FITTINGS AT RUDDER STATIONS 13.33 AND 23.27. SEE DETAIL I. |

## REPAIR INSTRUCTIONS

1. Remove the rudder to get access to the bottom clevis of the damaged hinge support fitting. Refer to 27-21-11 of the Maintenance Manual.
2. Remove the bushing from the bottom clevis. Refer to 20-50-03 of the Standard Overhaul Practices Manual, D6-51702.
3. Make an inspection of the bushing housing bore for corrosion. If there is corrosion, refer to 20-40-00 of the Corrosion Prevention Manual, D6-41910, for cleanup.
4. Make an inspection of the bushing housing bore for wear. If there is wear, do the steps that follow:
   - Line ream the bore of the bushing housing 1/64 inch oversize to a surface roughness of 63 microinches Ra
   - Remove the sharp edges from the bushing hole
   - Do an eddy current inspection of the bushing housing bore to find if all the damage has been removed. Refer to Part 6, 55-50-03, of the Nondestructive Test Manual, D6-37239
   - Do these steps again until all the damage has been removed.
5. Measure the diameter of the bushing bore after cleanup. The maximum permitted diameter after cleanup is 0.5003 inch. If the diameter is larger than 0.5003 inch, make an oversize bushing from Aluminum-Nickel-Bronze material. The maximum oversize diameter is 0.525 inch. [A] [B] See Detail III and Table I.
6. Blend out the damage from the bottom clevis. Make a smooth, flat surface. The blendout must not decrease the clevis thickness to less than 0.250 inch. Make a radius of 0.50 inch along the edge of the blendout. Refer to 51-10-6.
7. Flap peen the reworked surface of the clevis to an equivalent intensity of 0.014 A. Refer to 20-10-03 of the Standard Overhaul Practices Manual, D6-51702.
8. Do an inspection of the blendout area for cracks. Use the high frequency eddy current inspection procedure. Refer to the Nondestructive Test Manual, D6-37239.
9. Make the repair shim. See Detail II and Table I.
10. Put the shim on the hinge fitting. Use the center of the bushing hole in the clevis to drill a pilot hole through the shim.
11. Remove the shim from the clevis. Increase the diameter of the pilot hole in the shim to 1/64 inch larger than the final bushing housing bore diameter. See Detail II. [B]
12. Remove the sharp edges from the shim.
13. Apply a chemical conversion coating to the bare surfaces of the hinge fitting.
14. Apply cadmium plating to the cres repair shim. Refer to 51-10-2.
15. Apply two layers of BMS 10-11, Type I primer to the cres repair shim. Apply one layer of BMS 10-11, Type I primer to the bare surfaces of the hinge, but not to the bushing housing bore. Refer to 51-10-2.
16. Apply one layer of BMS 10-11, Type II enamel to the primed surfaces of the hinge fitting, but not to the bushing housing bore. Refer to 51-10-2.
17. Install the repair shim on the hinge support fitting with BMS 5-95 sealant. Align the holes of the shim and the clevis. Hold the shim in position with clamps.
18. Install the bushing wet with BMS 10-11, Type I primer through the shim, into the hinge fitting. Refer to 20-50-03 of the Standard Overhaul Practices Manual, D6-51702. The edge of the bushing must be 0.000 to 0.005 inch below the surface of the shim.
19. Let the sealant cure. Remove the clamps.
20. Install the rudder. Refer to 27-21-11 of the Maintenance Manual.

Vertical Stabilizer Rudder Hinge Support Fitting Repair
Figure 1 (Sheet 1)

## NOTES

- THIS REPAIR WILL NOT HAVE AN EFFECT ON A STRUCTURALLY SIGNIFICANT ITEM (SSI) GIVEN IN SRM 51-00-4, FIG. 3. THUS, NO CHANGE TO THE SUPPLEMENTAL STRUCTURAL INSPECTION DOCUMENT (SSID) INSPECTION PROGRAM IS NECESSARY.
- WHEN YOU DO THIS REPAIR, REFER TO:
  - AMM 27-21-11 OF THE MAINTENANCE MANUAL FOR RUDDER REMOVAL AND INSTALLATION
  - AMM 51-21 OF THE MAINTENANCE MANUAL FOR INTERIOR AND EXTERIOR FINISHES
  - CPM 20-40-00 FOR CORROSION REMOVAL
  - NDT PART 6, 55-50-03 FOR EDDY CURRENT INSPECTION PROCEDURES
  - SOPM 20-10-03 FOR FLAP PEENING
  - SOPM 20-50-03 OF THE STANDARD OVERHAUL PRACTICES MANUAL, D6-51702, FOR REMOVAL AND INSTALLATION OF BUSHINGS
  - SRM 51-10-1 FOR DAMAGE CLASSIFICATION
  - SRM 51-10-2 FOR PROTECTIVE TREATMENT OF METAL
  - SRM 51-20-4 FOR REPAIR SEALING.

[A] THE OUTER DIAMETER OF THE REPAIR BUSHING MUST BE FROM 0.000 TO 0.0013 INCH LARGER THAN THE DIAMETER OF THE BUSHING HOUSING BORE.

[B] IF AN OVERSIZE BUSHING IS USED, MAKE THE FINAL HOLE SIZE IN THE SHIM 1/64 INCH LARGER THAN THE BUSHING HOUSING BORE.

[C] THE THICKNESS OF THE REPAIR SHIM MUST BE THE SAME AS THE DEPTH OF CLEANUP OF THE HINGE FITTING CLEVIS. THE TOTAL THICKNESS OF THE SHIM AND THE CLEVIS AT RUDDER STA 13.33 MUST BE 0.300 (+0.005/-0.000) INCH.

THE TOTAL THICKNESS OF THE SHIM AND THE CLEVIS AT RUDDER STA 23.27 MUST BE 0.310 (+0.005/-0.000) INCH.

| REPAIR MATERIAL | | | |
|---|---|---|---|
| PART | | QTY | MATERIAL |
| 1 | SHIM | 1 | A-286 CRES SHEET [B] [C] |
| 2 | REPAIR BUSHING | 1 | ALUMINUM-NICKEL-BRONZE [A] |

TABLE I

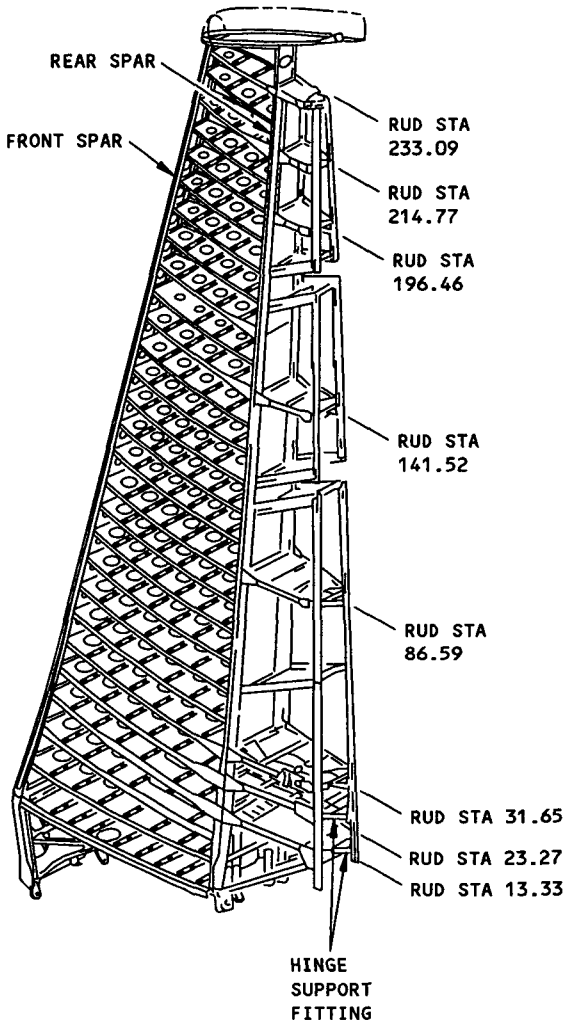


DETAIL I

Vertical Stabilizer Rudder Hinge Support Fitting Repair
Figure 1 (Sheet 2)


BOEING PROPRIETARY - Copyright © - Unpublished Work - See title page for details.

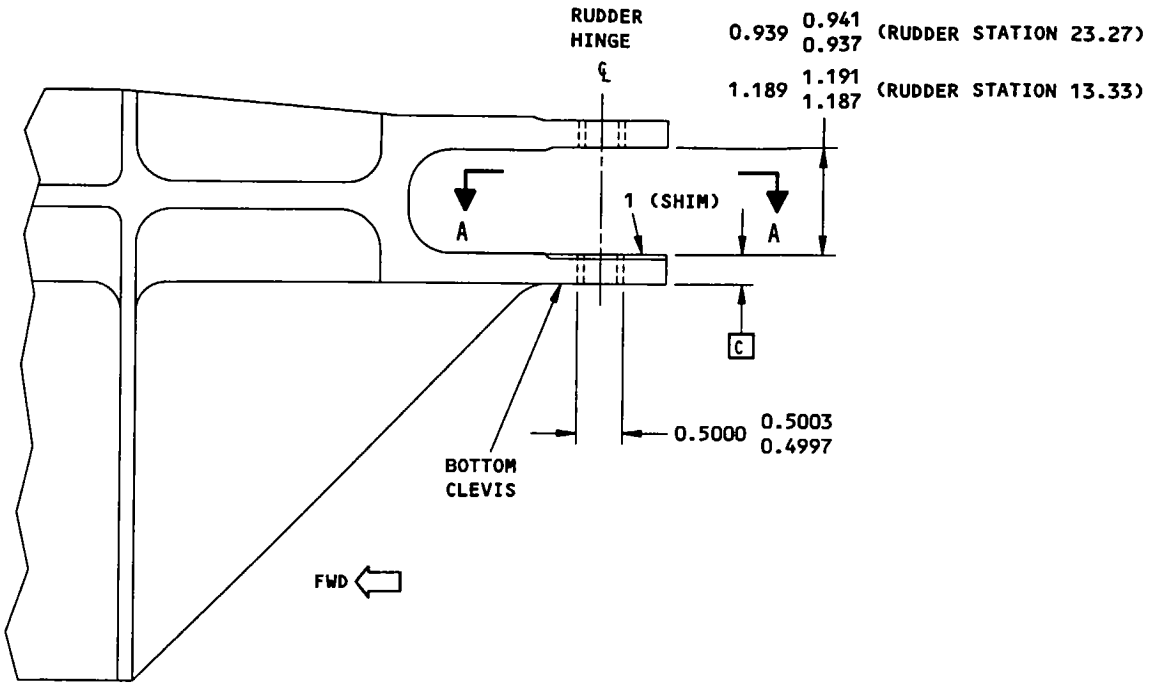


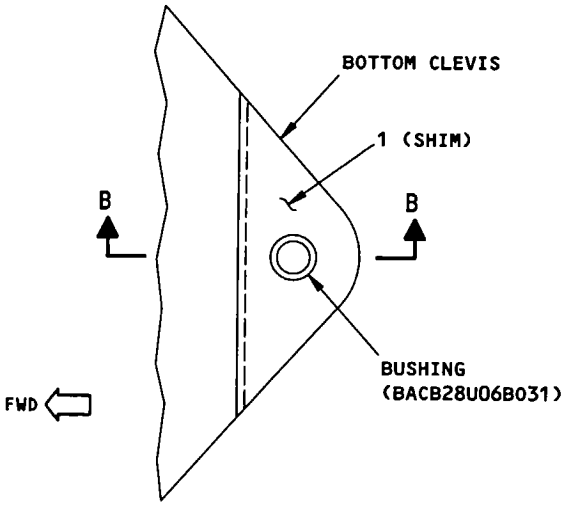


SECTION A-A

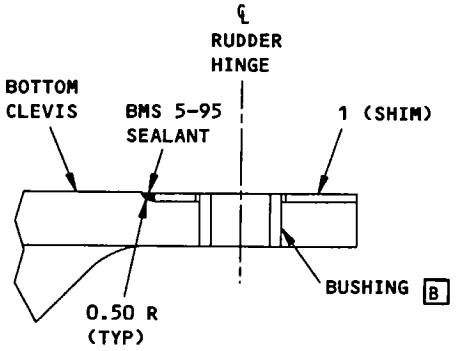


SECTION B-B

DETAIL I

Vertical Stabilizer Rudder Hinge Support Fitting Repair
Figure 1 (Sheet 3)



BOEING PROPRIETARY - Copyright © - Unpublished Work - See title page for details.

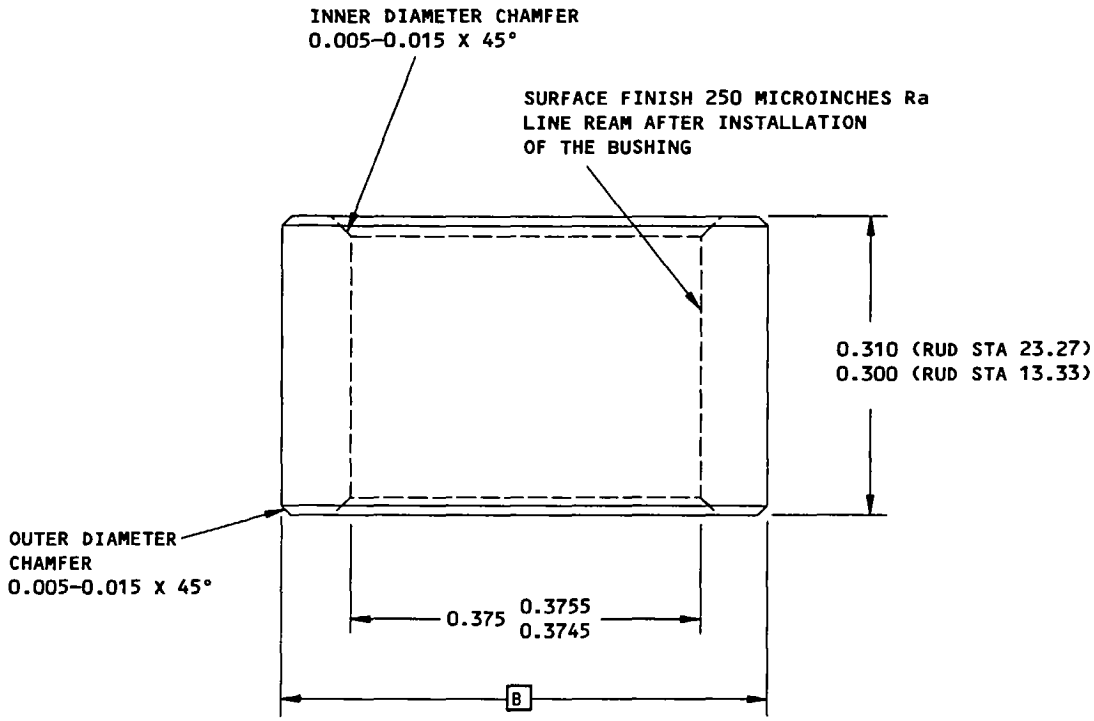


REPAIR BUSHING
DETAIL III

Vertical Stabilizer Rudder Hinge Support Fitting Repair
Figure 1 (Sheet 4)


BOEING PROPRIETARY - Copyright © - Unpublished Work - See title page for details.

# STRUCTURAL REPAIR

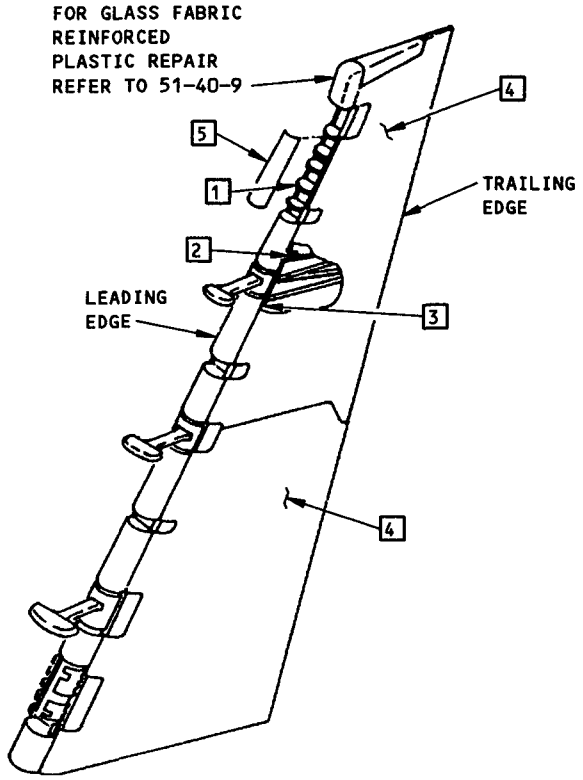


## NOTES

- THE ALLOWABLE DAMAGE LIMITS GIVEN IN THIS FIGURE WILL NOT HAVE AN EFFECT ON A STRUCTURALLY SIGNIFICANT ITEM (SSI) GIVEN IN SRM 51-00-4, FIG. 3. THUS, NO CHANGE TO THE SUPPLEMENTAL STRUCTURAL INSPECTION DOCUMENT (SSID) INSPECTION PROGRAM IS NECESSARY.
- REFER TO SRM 55-50 FOR THE ATTACHMENT FITTINGS.
- FOR GENERAL REPAIR PROCEDURES, REFER TO SRM 51-10.
- FOR EDGE MARGINS, REFER TO SRM 51-30-6.
- FOR CORROSION DAMAGE CLEANUP, REFER TO SRM 51-10-1.
- FOR AERODYNAMIC SMOOTHNESS REQUIREMENTS, REFER TO SRM 51-70.
- THE REPAIR OR REPLACEMENT OF A STRUCTURAL MEMBER IS NECESSARY WHEN IT HAS DAMAGE (SUCH AS NICKS, SCRATCHES, GOUGES, DENTS, AND HOLES) THAT ARE MORE THAN THE LIMITS GIVEN IN THIS ALLOWABLE DAMAGE.
- CLEAN UP ALL THE NICKS, SCRATCHES AND GOUGES IN THE METAL PARTS AS SHOWN IN DETAIL I. APPLY A CHEMICAL CONVERSION COATING AS GIVEN IN SRM 51-10-2. IT IS NOT NECESSARY TO CLEAN UP NICKS, SCRATCHES AND GOUGES THAT DO NOT GO THROUGH THE CLAD SURFACE.

Allowable Damage - Rudder
Figure 1 (Sheet 1)


BOEING PROPRIETARY - Copyright © - Unpublished Work - See title page for details.

NOTES (CONTINUED)

[A] ON ANY REFERENCE LINE A-B DRAWN BETWEEN RIB OR SPAR CHORDS, AS SHOWN IN DETAIL III, THE MAXIMUM ALLOWABLE CROSS SECTIONAL AREA REMOVED FROM THE WEB INCLUDING ALL FASTENER HOLES, SCRATCHES, AND GOUGES MUST NOT EXCEED 20% OF THE TOTAL CROSS SECTIONAL AREA BETWEEN A AND B.

ON ANY REFERENCE LINE I-J DRAWN THROUGH AN EXISTING LIGHTENING HOLE AS SHOWN IN DETAIL III, THE MAXIMUM ALLOWABLE CROSS SECTIONAL AREA REMOVED FROM THE WEB INCLUDING ALL FASTENER HOLES, SCRATCHES, AND GOUGES MUST NOT EXCEED 20% OF THE TOTAL CROSS SECTIONAL AREA BETWEEN I AND J.

[B] MAXIMUM DEPTH (X) OF A SCRATCH, GOUGE OR NICK MUST NOT EXCEED THE FOLLOWING. (SEE DETAIL I.)

20% OF SHEET THICKNESS FOR SPAR WEBS AND LE RIBS
25% OF SHEET THICKNESS FOR ALL ALUMINUM SKINS
20% OF FLANGE THICKNESS OR WIDTH FOR ALL RIB AND SPAR CHORDS

[C] THE MAXIMUM DEPTH OF DENT DAMAGE IN ALUMINUM WEBS AND SKINS MUST NOT EXCEED Y = 0.125. THE MAXIMUM A/Y RATIO MUST NOT BE LESS THAN 30 IN WEBS OR 10 IN SKINS. SEE DETAIL II.

A REPAIR IS REQUIRED WHEN THE ALUMINUM SKIN OR WEB HAS BEEN SUBJECTED TO DENT DAMAGE THAT EXCEEDS THE ABOVE DIMENSION AND WHEN THERE IS EVIDENCE OF PULLED OR LOOSE RIVETS, SHARP CREASES, GOUGES, SCRATCHES, WRINKLING, STRETCHING OR CRACKING.

[D] NO DENT DAMAGE IS ALLOWED ON RIB OR SPAR WEB STIFFENERS. REPLACE ALL STIFFENERS THAT SHOW DENT DAMAGE.

NO DENT DAMAGE IS ALLOWED ON RIB OR SPAR CHORD FLANGES. REPLACE OR REPAIR ALL RIB CHORDS THAT SHOW DENT DAMAGE.

[E] HOLE DAMAGE IN WEB STIFFENERS MUST NOT EXCEED THE LARGEST EXISTING RIVET OR BOLT FASTENER DIAMETER IN THE AREA OF THE DAMAGED PARTS OR EXCEED 20% OF THE FLANGE DIMENSION H. USE WHICHEVER VALUE IS SMALLER. FILL ALL HOLES WITH ALUMINUM RIVETS.

[F] REPAIR ALL HOLES PER 51-40-9, FIGURE 1 EXCEPT EXISTING DRAIN HOLES.

[G] ALL CRACKED PARTS MUST BE REPAIRED. SEE 51-10-1.

CRACKS AT FLANGE EDGES MUST BE REWORKED AS SHOWN IN DETAIL I.

TOTAL AREA REMOVED INCLUDING EXISTING FASTENER HOLES, SCRATCHES, GOUGES AND NICKS MUST NOT REDUCE THE TOTAL CROSS SECTIONAL AREA IN EXCESS OF 20%.

[H] DAMAGE ALLOWED ON SURFACE RESIN ONLY. DAMAGE TO FIBERS NOT ALLOWED. CLEAN UP EDGE DAMAGE. REFER TO DETAILS IV, V OR VI. [J]

[I] DENTS GENERALLY RESULT IN FIBER DAMAGE OR DELAMINATION WHICH MAY NOT BE APPARENT USING VISUAL OR TAP TESTING METHODS OF DETECTION. DENTS UP TO 0.50 DIAMETER MAXIMUM (D) ARE ALLOWED BUT MUST BE A MINIMUM OF 4D (EDGE TO EDGE) FROM ANY OTHER DAMAGE, FASTENER HOLE OR PART EDGE. REFER TO NOTE [J].

[J] IT IS RECOMMENDED TO REMOVE MOISTURE FROM THE DAMAGED AREA. USE VACUUM AND HEAT (A MAXIMUM OF 150°F [66°C]) TO REMOVE THAT MOISTURE.

CLEAN THE DAMAGED AREA. SEAL THE DAMAGED AREA WITH ALUMINUM FOIL TAPE (SPEED TAPE) 3M-Y436 OR AN EQUIVALENT. KEEP THE QUANTITY OF SPEED TAPE TO A MINIMUM. THE AMOUNT OF SPEED TAPE CAN CHANGE THE BALANCE MOMENT OF THE RUDDER. IF NECESSARY, BALANCE THE RUDDER. REFER TO SRM 51-81-7.

KEEP A RECORD OF THE LOCATION WHERE SPEED TAPE IS INSTALLED. MAKE AN INSPECTION OF THAT LOCATION NO MORE THAN 65 FLIGHT HOURS AFTER THE TAPE IS APPLIED. REPLACE THE TAPE IF IT STARTS TO COME OFF OR DETERIORATION IS FOUND. REPAIR THE DAMAGE NO MORE THAN 60 CALENDAR DAYS AFTER THE TAPE IS APPLIED. IF THE DAMAGE BECOMES LARGER IN LESS THAN 60 CALENDAR DAYS, REPAIR THE DAMAGE NO MORE THAN FIVE FLIGHTS AFTER THAT.

Allowable Damage - Rudder
Figure 1 (Sheet 2)

NOTES (CONTINUED)

[K] DELAMINATION IS PERMITTED UP TO 1.0 SQUARE INCH FOR A SQUARE FOOT OF PANEL AREA. THE DAMAGE MUST BE 6 INCHES MINIMUM FROM OTHER DAMAGE AND 1.0 INCH MINIMUM FROM A HOLE OR MATERIAL EDGE. DELAMINATION IS PERMITTED UP TO 0.10 INCH FROM A PANEL EDGE. [J]

EDGE DELAMINATIONS UP TO A MAXIMUM LENGTH OF 2.0 INCHES AND A DEPTH OF 0.5 INCH CAN BE SEALED AS FOLLOWS:

- APPLY ONE LAYER OF SPEED TAPE WHICH EXTENDS OUT 2 INCHES ALL AROUND THE DAMAGE
- APPLY A SECOND LAYER OF SPEED TAPE WHICH EXTENDS OUT 1.00 INCH ALL AROUND THE EDGES OF THE FIRST LAYER OF SPEED TAPE.

THESE DAMAGE LOCATIONS MUST BE A MINIMUM OF 10 TIMES THE DAMAGE LENGTH (EDGE TO EDGE) FROM OTHER DAMAGE LOCATIONS.

[L] 1.0 SQUARE INCH ALLOWED WITHOUT REWORK. [J]

Allowable Damage - Rudder
Figure 1 (Sheet 2A)

| ITEM | LOCATION OF DAMAGE | | TYPE OF DAMAGE | | | | |
|---|---|---|---|---|---|---|---|
| | | | CRACKS | NICK AND GOUGES | DENTS | HOLE | DELAMINATION |
| 1 | LEADING EDGE RIB | WEBS | G | SEE DETAIL I A B | SEE DETAIL II C D | SEE DETAIL III A | — |
| 2 | TRAILING RIB | WEBS | | SEE DETAIL I A B | SEE DETAIL II C | SEE DETAIL III A | — |
| | | CHORDS | | SEE DETAIL I B | D | — | — |
| | | WEB STIFFENERS | | SEE DETAIL I B | D | SEE DETAIL III E | — |
| 3 | SPAR | WEBS | | SEE DETAIL I A B | SEE DETAIL II C | SEE DETAIL III A | — |
| | | CHORDS | | SEE DETAIL I B | D | — | |
| | | WEB STIFFENERS | | SEE DETAIL I B | D | SEE DETAIL III E | |
| 4 | TRAILING EDGE SKIN | | | H | I | F | K |
| 5 | LEADING EDGE SKIN | HINGE COVER | | SEE DETAIL I B | SEE DETAIL II C | NO HOLES ALLOWED. REPLACE OR REPAIR AS REQUIRED | L |
| | | COVER PLATE | | | | | — |

ALLOWABLE DAMAGE INDEX

Allowable Damage – Rudder
Figure 1 (Sheet 3)

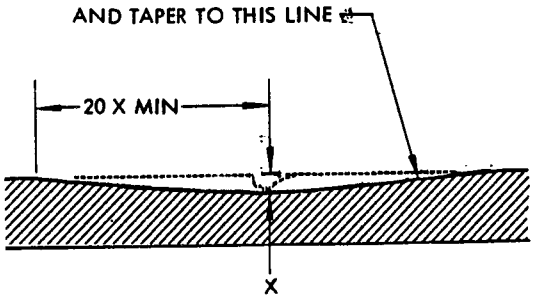


SECTION THROUGH GOUGE

X = DEPTH OF GOUGE

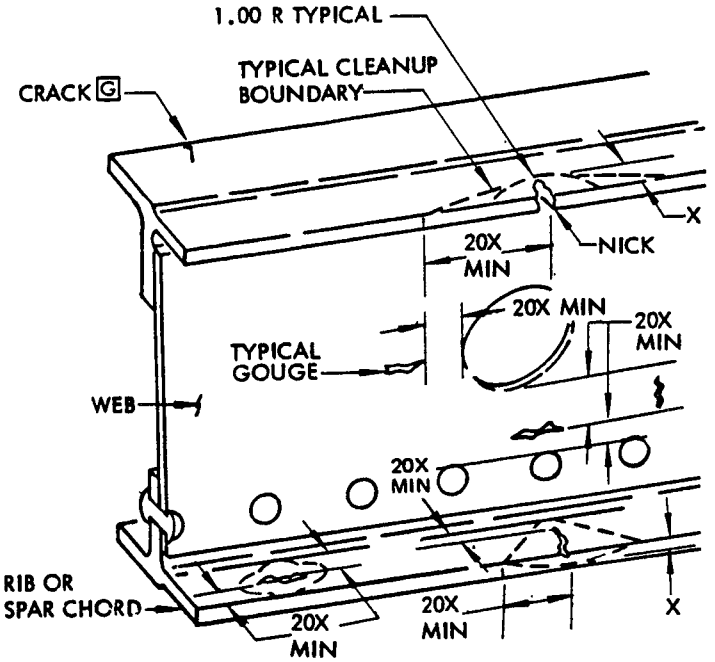


NICKS, GOUGES AND FLANGE EDGE CRACKS

DETAIL I

Y = DEPTH OF DENT FROM CONTOUR

T = THICKNESS OR GAGE OF PART

A = DIAMETER OF DENT

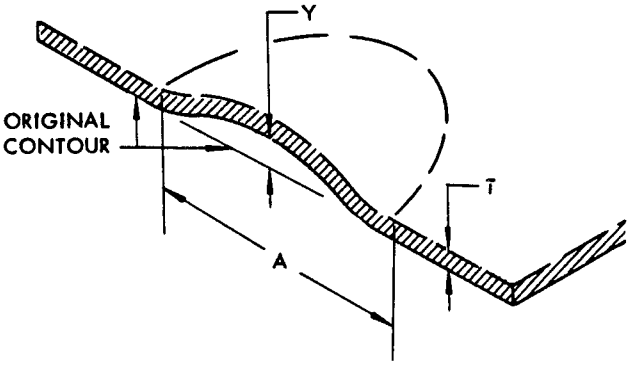


SECTION THROUGH DENT

DETAIL II

Allowable Damage - Rudder
Figure 1 (Sheet 4)

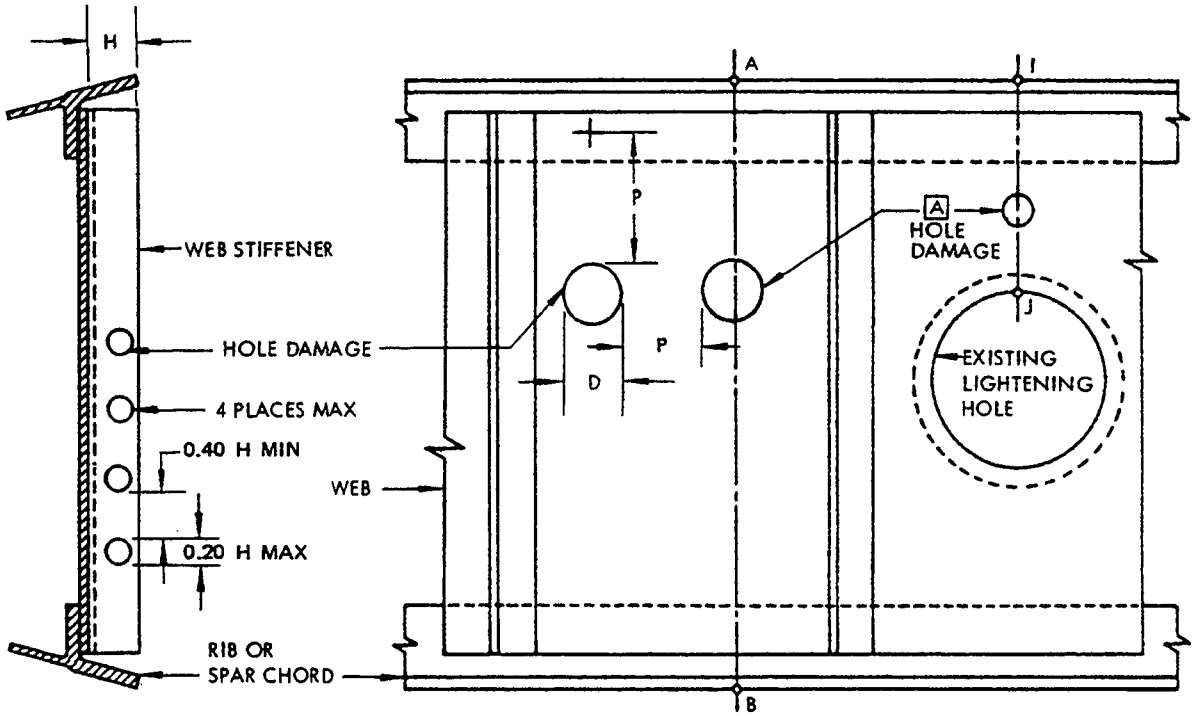


A,B,I,J = REFERENCE POINTS
D = ANY HOLE SIZE UP TO AND INCLUD-
ING 1.00 DIA MAX
H = WIDTH OF STIFFENER FLANGE
P = 2 X D MIN

ALLOWABLE DAMAGE LIMITS FOR HOLES

DETAIL III

Allowable Damage - Rudder
Figure 1 (Sheet 5)

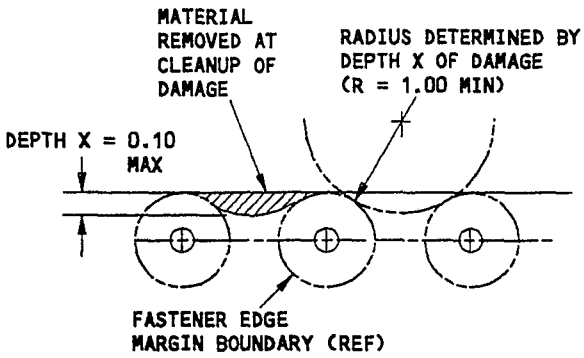


DAMAGE CLEANUP OF EDGES WHERE FASTENER EDGE MARGINS DO NOT OVERLAP

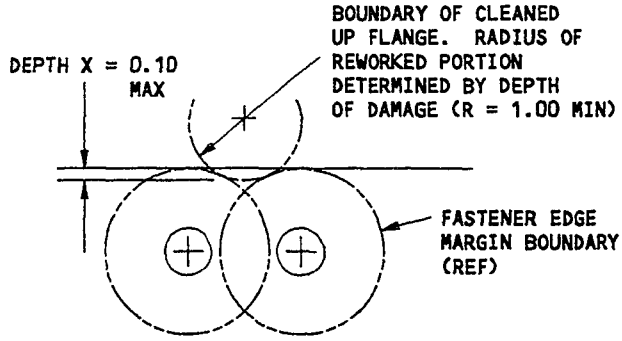


DAMAGE CLEANUP OF EDGES WHERE FASTENER EDGE MARGINS OVERLAP

DETAIL IV

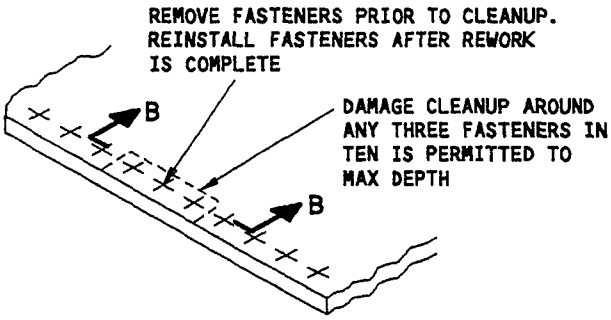


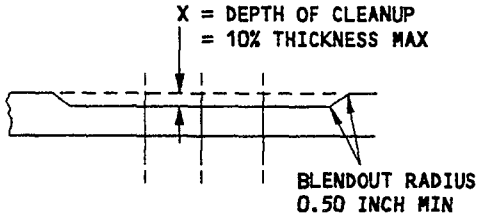


SECTION B–B

DAMAGE CLEANUP
DETAIL V

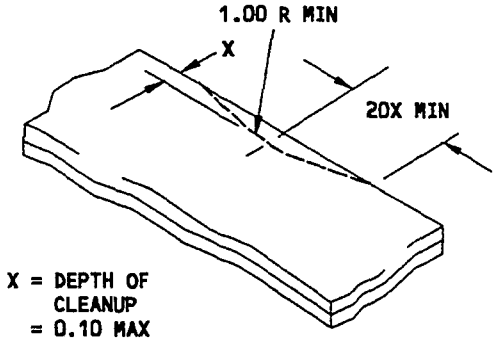


REMOVAL OF DAMAGE ON AN EDGE
DETAIL VI

Allowable Damage – Rudder
Figure 1 (Sheet 6)

E36457

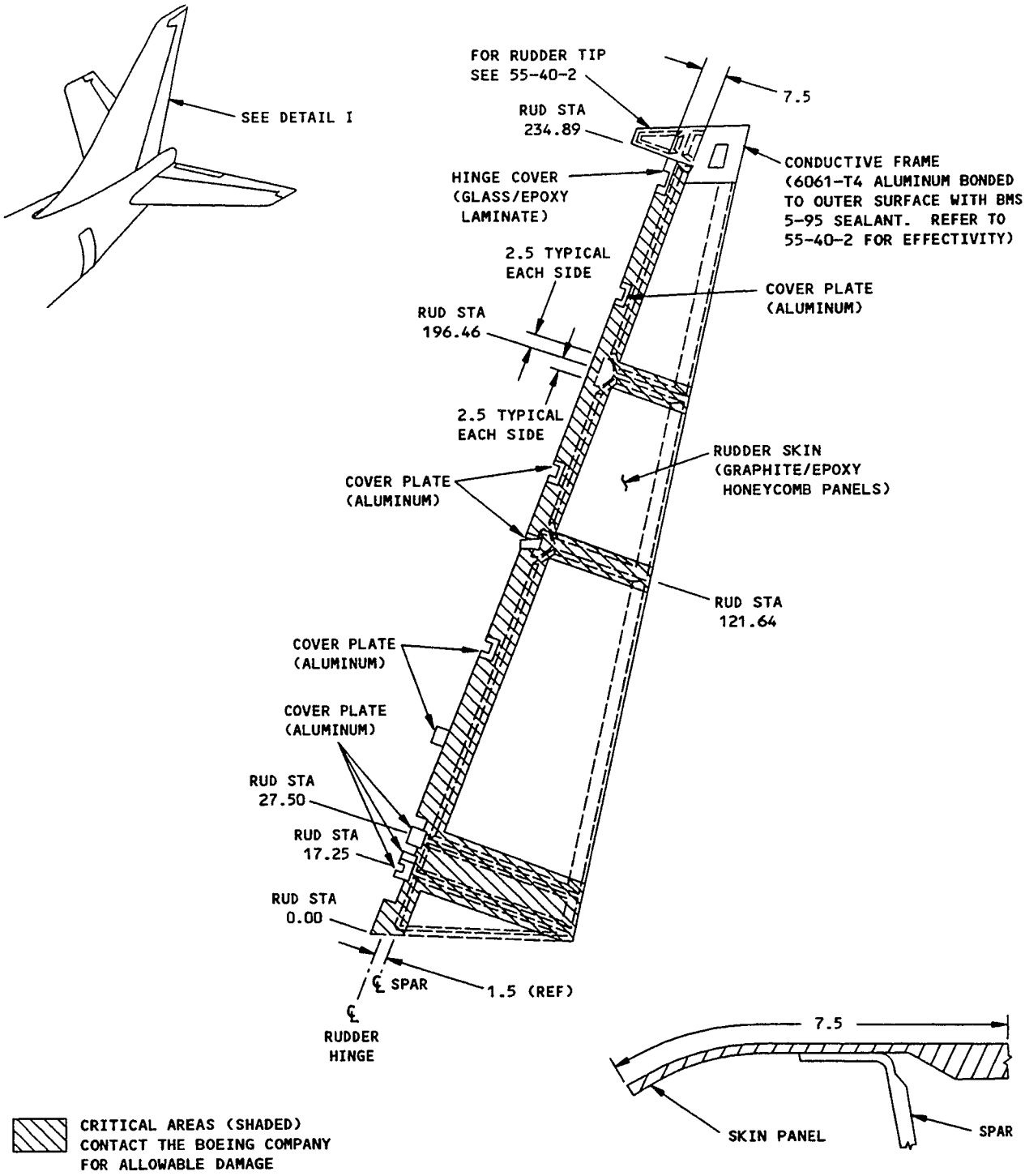


SECTION VIEW OF LEADING EDGE

DETAIL I

Rudder Skin Allowable Damage (Graphite Composite Rudder)
Figure 2 (Sheet 1)

| DESCRIPTION | CRACKS | NICKS, GOUGES, SCRATCHES AND CORROSION | DENTS | HOLES AND PUNCTURES | DELAMINATION |
|---|---|---|---|---|---|
| RUDDER SKIN PANELS | B | D | F | H | J |
| HINGE COVER | B | D | F | H | K |
| COVERPLATE | C | E | G | I | — |
| CONDUCTIVE FRAME A | L | M | N | NOT ALLOWED | P |

ALLOWABLE DAMAGE FOR DETAIL I

NOTES

- THE ALLOWABLE DAMAGE LIMITS GIVEN IN THIS FIGURE WILL NOT HAVE AN EFFECT ON A STRUCTURALLY SIGNIFICANT ITEM (SSI) GIVEN IN SRM 51-00-4, FIG. 3. THUS, NO CHANGE TO THE SUPPLEMENTAL STRUCTURAL INSPECTION DOCUMENT (SSID) INSPECTION PROGRAM IS NECESSARY.
- FOR INVESTIGATION AND CLEANUP OF DAMAGE REFER TO 51-10
- D = MAXIMUM DAMAGE DIMENSION
- FOR REWORKED ALUMINUM AREAS APPLY A PROTECTIVE ALODINE COATING PER 51-20-01
- REFINISH REWORKED AREAS PER 51-20 OF THE MAINTENANCE MANUAL
- REFER TO 51-70 FOR AERODYNAMIC SMOOTHNESS REQUIREMENTS. WHERE THE DAMAGE EXCEEDS THE LIMITS SHOWN IN 51-70, CONSIDERATION SHOULD BE GIVEN TO THE LOSS OF PERFORMANCE INVOLVED
- TYPICAL DAMAGE TO A PANEL EDGEBAND MAY CONSIST OF EDGE CRUSHING, CRACKS OR DELAMINATION. DAMAGE AROUND HOLES MAY CONSIST OF OVALIZATION, FASTENER PULL-THROUGH OR CRACKS OUT OF HOLE. DAMAGE MAY REDUCE THE EFFECTIVE CROSS SECTIONAL AREA OF AN EDGEBAND. DAMAGE TO EDGES SHOULD BE BLENDED OUT TO LIMITATIONS GIVEN FOR COMPONENT

A THE CONDUCTIVE FRAME IS MADE OF SOFT ALUMINUM MATERIAL AND SHOULD HAVE PROTECTIVE COVERING WHEN WORK ACTIVITY IS OCCURING IN IMMEDIATE AREA. A DENT IN THE CONDUCTIVE FRAME MAY RESULT IN DAMAGE TO UNDERSTRUCTURE. SEE F FOR APPLICABLE DENT DAMAGE TO SKIN PANELS

B EDGE CRACKS MUST BE REMOVED PER DETAILS II AND VI. 0.50 MAX LENGTH IN HONEYCOMB AREA IS ALLOWED PER SQUARE FOOT OF AREA AND MINIMUM OF 6.0 INCHES FROM ANY OTHER DAMAGE OR HOLE. O ONE CRACK OF 0.50 MAX LENGTH (OTHER THAN EDGE CRACKS) IS ALLOWED ON HINGE COVER O

C CLEAN UP EDGE CRACKS PER DETAILS II AND VI. OTHER CRACKS NOT ALLOWED

D DAMAGE ALLOWED ON SURFACE RESIN ONLY. DAMAGE TO FIBERS NOT ALLOWED. CLEAN UP EDGE DAMAGE PER DETAIL II OR DETAIL VI O

E NICKS, GOUGES, SCRATCHES, OR CORROSION REMOVED PER DETAILS II,III,IV, AND VI ARE ALLOWED PROVIDED THE MAXIMUM PERMISSIBLE DEPTH OF DAMAGE IS NOT EXCEEDED. NICKS, GOUGES AND SCRATCHES THAT DO NOT PENETRATE ALL THE WAY THRU CLAD SURFACES MAY BE IGNORED

F DENTS GENERALLY RESULT IN FIBER DAMAGE OR DELAMINATION WHICH MAY NOT BE APPARENT USING VISUAL OR TAP TESTING METHODS OF DETECTION. DENTS UP TO 0.50 DIAMETER MAXIMUM (D) ARE ALLOWED BUT MUST BE A MINIMUM OF 4D (EDGE TO EDGE) FROM ANY OTHER DAMAGE, FASTENER HOLE OR PART EDGE. TREAT PER NOTE O. IF FIBER DAMAGE OR DELAMINATION IS DETECTED REFER TO APPLICABLE DAMAGE DATA IN TABLE O. ONE DENT UP TO 0.50 MAX DIA IS ALLOWED ON HINGE COVER O

G FOR DENTS SEE DETAIL IV

H ON SKIN PANELS 0.50 MAX DIA ALLOWED PROVIDED DAMAGE IS MIN OF 6D FROM OTHER DAMAGE, NEAREST HOLE, OR PART EDGE. ON HINGE COVER 0.50 MAX DIA ALLOWED PROVIDED DAMAGE IS MIN OF 2.5D FROM PART EDGE. DO NOT CLEAN UP DAMAGE EXCEPT TO REMOVE RESIN BURRS EXTENDING INTO SURFACE CONTOUR O

I CLEAN PUNCTURE OUT UP TO 0.25 MAX DIA HOLE AND NOT CLOSER THAN 1.0 INCH TO FASTENER HOLE, EDGE OF PART, OR OTHER DAMAGE. ONE HOLE PER 15.0 SQUARE INCHES OF PANEL ALLOWED. FILL HOLE WITH A 2117-T3 OR T4 ALUMINUM RIVET INSTALLED WET WITH BMS 5-95 SEALANT. IF OTHER HOLES OR PUCTURES ARE PRESENT REPLACE COVER PLATE

J DELAMINATION IS PERMITTED UP TO 1.0 SQUARE INCH FOR A SQUARE FOOT OF PANEL. THE DAMAGE MUST BE 6 INCHES MINIMUM FROM OTHER DAMAGE AND 1.0 INCH MINIMUM FROM A HOLE OR MATERIAL EDGE. DELAMINATION IS ALLOWED UP TO 0.10 INCH FROM A PANEL EDGE. O EDGE DELAMINATIONS UP TO A MAXIMUM LENGTH OF 2.0 INCHES AND A DEPTH OF 0.5 INCH CAN BE SEALED AS FOLLOWS:

- APPLY ONE LAYER OF SPEED TAPE WHICH EXTENDS OUT 2 INCHES ALL AROUND THE DAMAGE

Rudder Skin Allowable Damage (Graphite Composite Rudder)
Figure 2 (Sheet 2)


BOEING PROPRIETARY - Copyright © - Unpublished Work - See title page for details.

NOTES (CONT)

- APPLY A SECOND LAYER OF SPEED TAPE WHICH EXTENDS OUT 1.00 INCH ALL AROUND THE EDGES OF THE FIRST LAYER OF SPEED TAPE.

THESE DAMAGE LOCATIONS MUST BE A MINIMUM OF 10 TIMES THE DAMAGE LENGTH (EDGE TO EDGE) FROM OTHER DAMAGE LOCATIONS.

[K] 1.0 SQUARE INCH ALLOWED WITHOUT REWORK [O]

[L] CRACKS NOT ALLOWED EXCEPT FOR EDGE CRACKS WHICH MUST BE CLEANED UP PER DETAIL VI. NO CRACKS ALLOWED WHERE FRAME CONTACTS JUMPER BRACKETS

[M] NICKS, GOUGES, SCRATCHES, OR CORROSION REMOVED PER DETAILS III AND VI ARE ALLOWED PROVIDED THE MAXIMUM PERMISSIBLE DEPTH OF DAMAGE IS NOT EXCEEDED

[N] ONE DENT PER DETAIL IV ALLOWED PER SIDE OF FRAME [A]

[O] IT IS RECOMMENDED TO REMOVE MOISTURE FROM THE DAMAGED AREA. USE VACUUM AND HEAT (A MAXIMUM OF 150°F [66°C]) TO REMOVE THAT MOISTURE.

CLEAN THE DAMAGED AREA. SEAL THE DAMAGED AREA WITH ALUMINUM FOIL TAPE (SPEED TAPE) 3M-Y436 OR AN EQUIVALENT. KEEP THE QUANTITY OF SPEED TAPE TO A MINIMUM. THE AMOUNT OF SPEED TAPE CAN CHANGE THE BALANCE MOMENT OF THE RUDDER. IF NECESSARY, BALANCE THE RUDDER. REFER TO SRM 51-81-7.

KEEP A RECORD OF THE LOCATION WHERE SPEED TAPE IS INSTALLED. MAKE AN INSPECTION OF THAT LOCATION NO MORE THAN 65 FLIGHT HOURS AFTER THE TAPE IS APPLIED. REPLACE THE TAPE IF IT STARTS TO COME OFF OR DETERIORATION IS FOUND. REPAIR THE DAMAGE NO MORE THAN 60 CALENDAR DAYS AFTER THE TAPE IS APPLIED. IF THE DAMAGE BECOMES LARGER IN LESS THAN 60 CALENDAR DAYS, REPAIR THE DAMAGE NO MORE THAN FIVE FLIGHTS AFTER THAT.

[P] DELAMINATION - DISBONDING OF FRAME FROM SKIN PANEL 1.0 IN MAXIMUM DIMENSION ALLOWED PROVIDED DELAMINATION IS A MINIMUM OF 1.0 IN FROM ANY EDGE, HOLE, OR OTHER DAMAGE. [O]

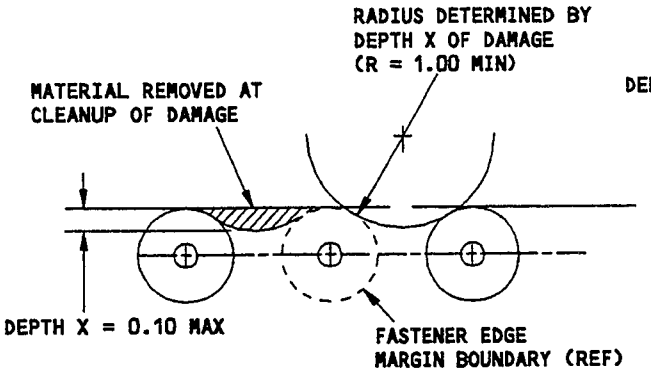


DAMAGE CLEANUP OF EDGES WHERE FASTENER EDGE MARGINS DO NOT OVERLAP

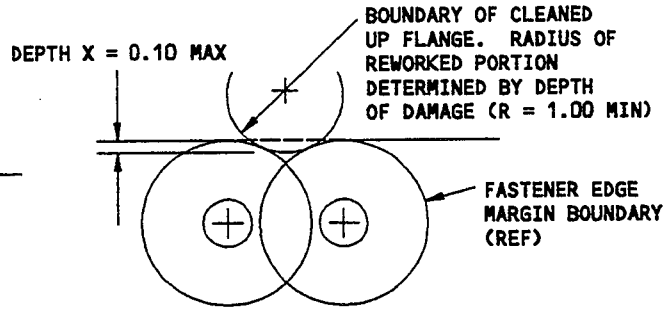


DAMAGE CLEANUP OF EDGES WHERE FASTENER EDGE MARGINS OVERLAP

DETAIL II

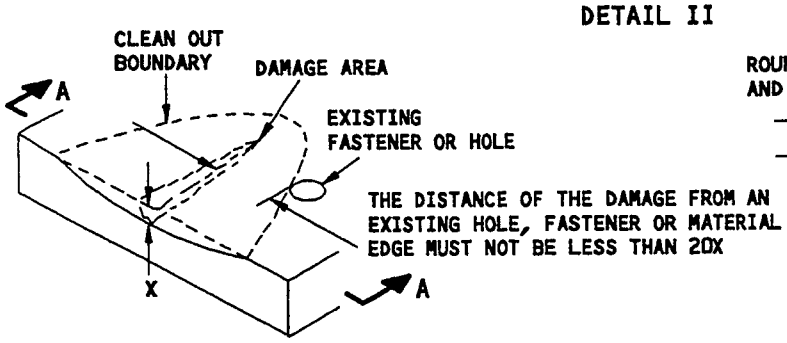


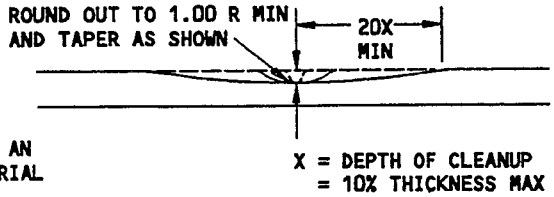


SECTION A-A

REMOVAL OF NICK, GOUGE, SCRATCH, AND CORROSION DAMAGE ON A SURFACE

DETAIL III

Rudder Skin Allowable Damage (Graphite Composite Rudder)
Figure 2 (Sheet 3)

141813

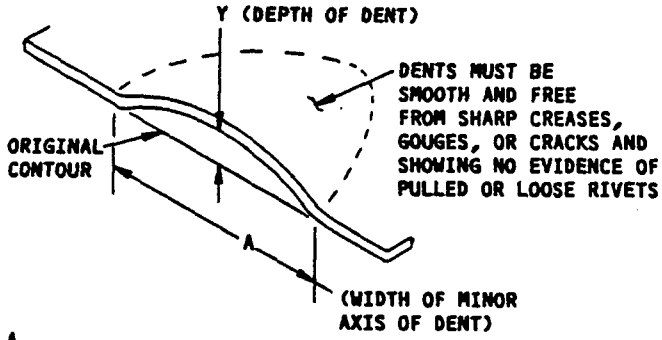


$\frac{A}{Y}$ MUST NOT BE LESS THAN 30

Y = 0.125 MAX

ALLOWABLE DAMAGE FOR DENT

DETAIL IV

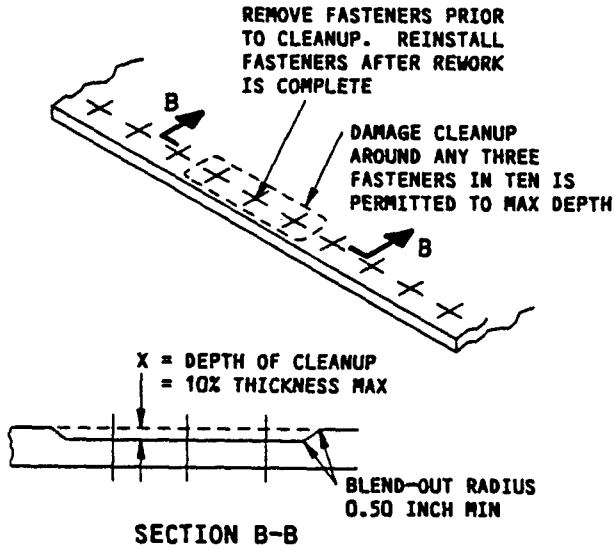


SECTION B-B

DAMAGE CLEANUP

DETAIL V

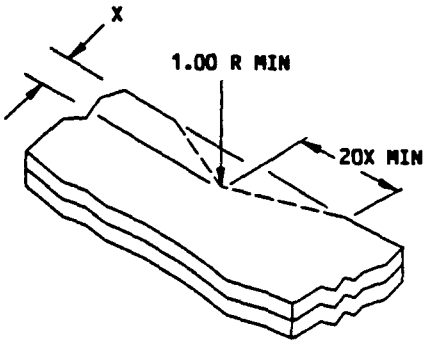


X = DEPTH OF CLEANUP = 0.10 MAX

REMOVAL OF DAMAGE ON AN EDGE

DETAIL VI

Rudder Skin Allowable Damage (Graphite Composite Rudder)
Figure 2 (Sheet 4)

141817

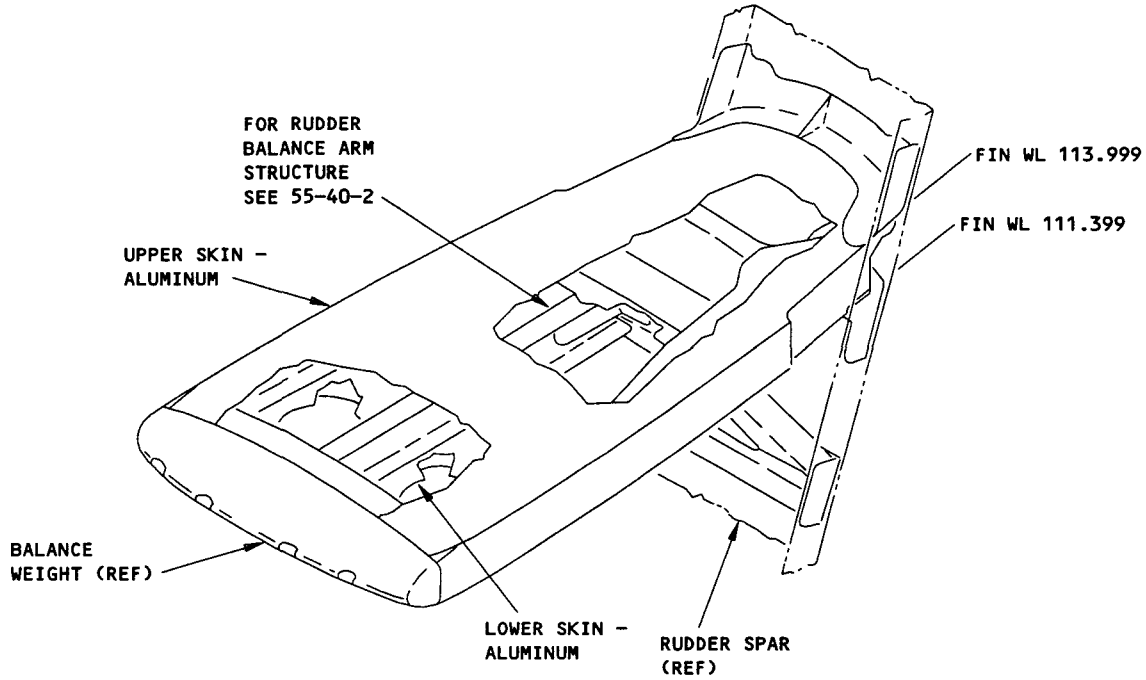


DETAIL I

| DESCRIPTION | CRACKS | NICKS, GOUGES, SCRATCHES AND CORROSION | DENTS | HOLES AND PUNCTURES |
|---|---|---|---|---|
| UPPER SKIN PANEL CHEM-MILLED | A | B | C | D |
| LOWER SKIN PANEL | A | B | C | D |

ALLOWABLE DAMAGE FOR DETAIL I

NOTES

- THE ALLOWABLE DAMAGE LIMITS GIVEN IN THIS FIGURE WILL NOT HAVE AN EFFECT ON A STRUCTURALLY SIGNIFICANT ITEM (SSI) GIVEN IN SRM 51-00-4, FIG. 3. THUS, NO CHANGE TO THE SUPPLEMENTAL STRUCTURAL INSPECTION DOCUMENT (SSID) INSPECTION PROGRAM IS NECESSARY.
- FOR INVESTIGATION AND CLEANUP OF DAMAGE REFER TO 51-10
- REFER TO 51-70 FOR AERODYNAMIC SMOOTHNESS REQUIREMENTS. WHERE THE DAMAGE EXCEEDS THE LIMITS SHOWN IN 51-70, CONSIDERATION SHOULD BE GIVEN TO THE LOSS OF PERFORMANCE INVOLVED
- FOR REWORKED ALUMINUM AREAS APPLY A PROTECTIVE ALODINE COATING PER 51-10-2
- REFINISH REWORKED AREAS PER 51-20 OF THE MAINTENANCE MANUAL

A CLEAN UP CRACKS PER DETAIL II. OTHER CRACKS NOT ALLOWED

B NICKS, GOUGES, SCRATCHES, OR CORROSION, REMOVED PER DETAILS II,III, AND V ARE ALLOWED PROVIDED THE MAXIMUM PERMISSIBLE DEPTH OF DAMAGE IS NOT EXCEEDED. NICKS, GOUGES, AND SCRATCHES THAT DO NOT PENETRATE ALL THE WAY THROUGH CLAD SURFACES MAY BE IGNORED

C DENTS ALLOWED PER DETAIL IV

D HOLES UP TO 0.25 DIAMETER ARE ALLOWED PROVIDED THEY ARE LOCATED 4D FROM ANY OTHER HOLE, FASTENER, PART EDGE OR OTHER DAMAGE AND ARE FILLED WITH 2117-T3 OR T4 ALUMINUM RIVETS. ALUMINUM RIVETS TO BE INSTALLED WET WITH BMS 5-95 SEALANT. D = FILLED HOLE DIAMETER

Rudder Balance Arm Skin Allowable Damage (Graphite Composite Rudder)
Figure 3 (Sheet 1)


BOEING PROPRIETARY - Copyright © - Unpublished Work - See title page for details.

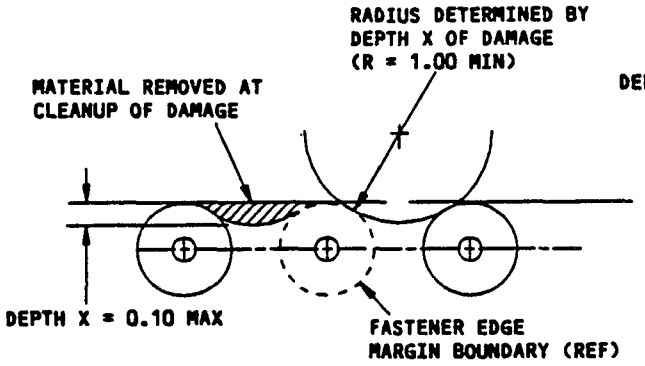


DAMAGE CLEANUP OF EDGES WHERE FASTENER EDGE MARGINS DO NOT OVERLAP

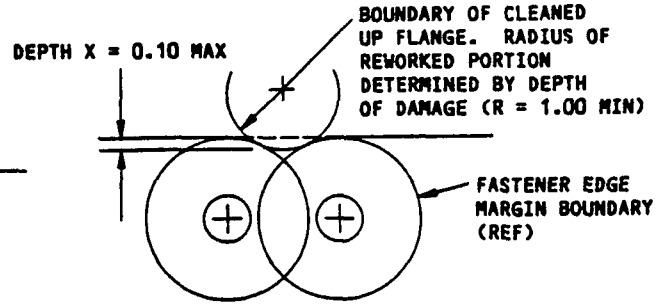


DAMAGE CLEANUP OF EDGES WHERE FASTENER EDGE MARGINS OVERLAP

DETAIL II

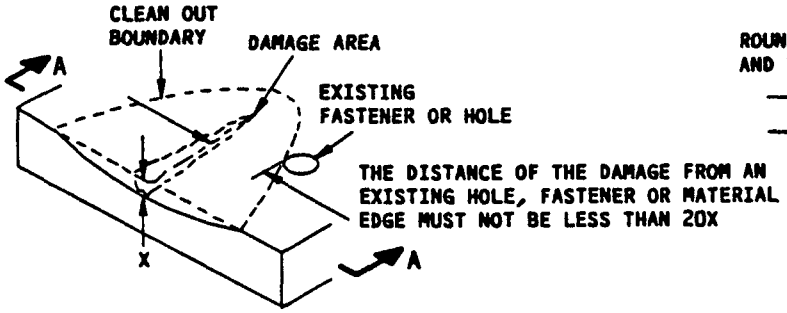


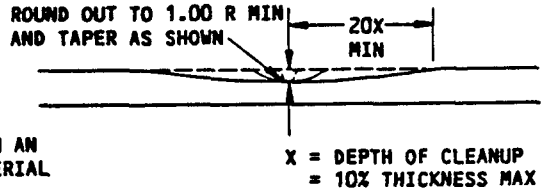


SECTION A-A

REMOVAL OF NICK, GOUGE, SCRATCH, AND CORROSION DAMAGE ON A SURFACE
DETAIL III

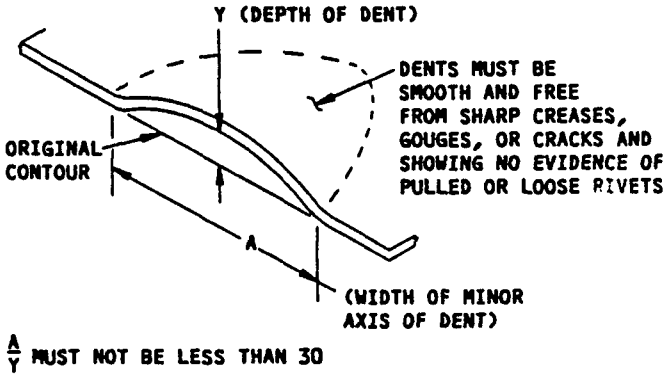


ALLOWABLE DAMAGE FOR DENT
DETAIL IV

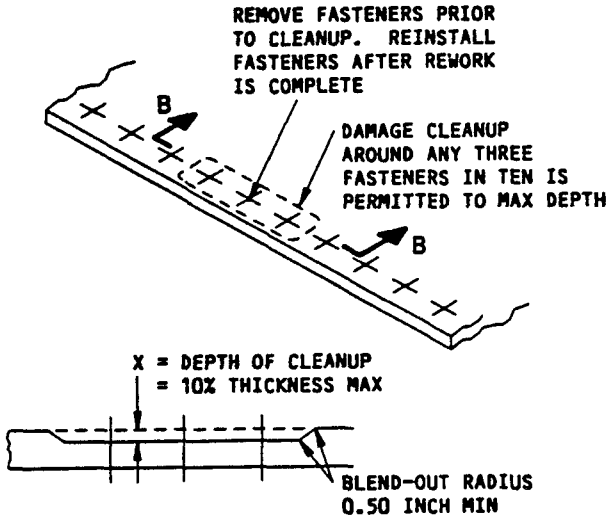


SECTION B-B
DAMAGE CLEANUP
DETAIL V

Rudder Balance Arm Skin Allowable Damage (Graphite Composite Rudder)
Figure 3 (Sheet 2)

141819

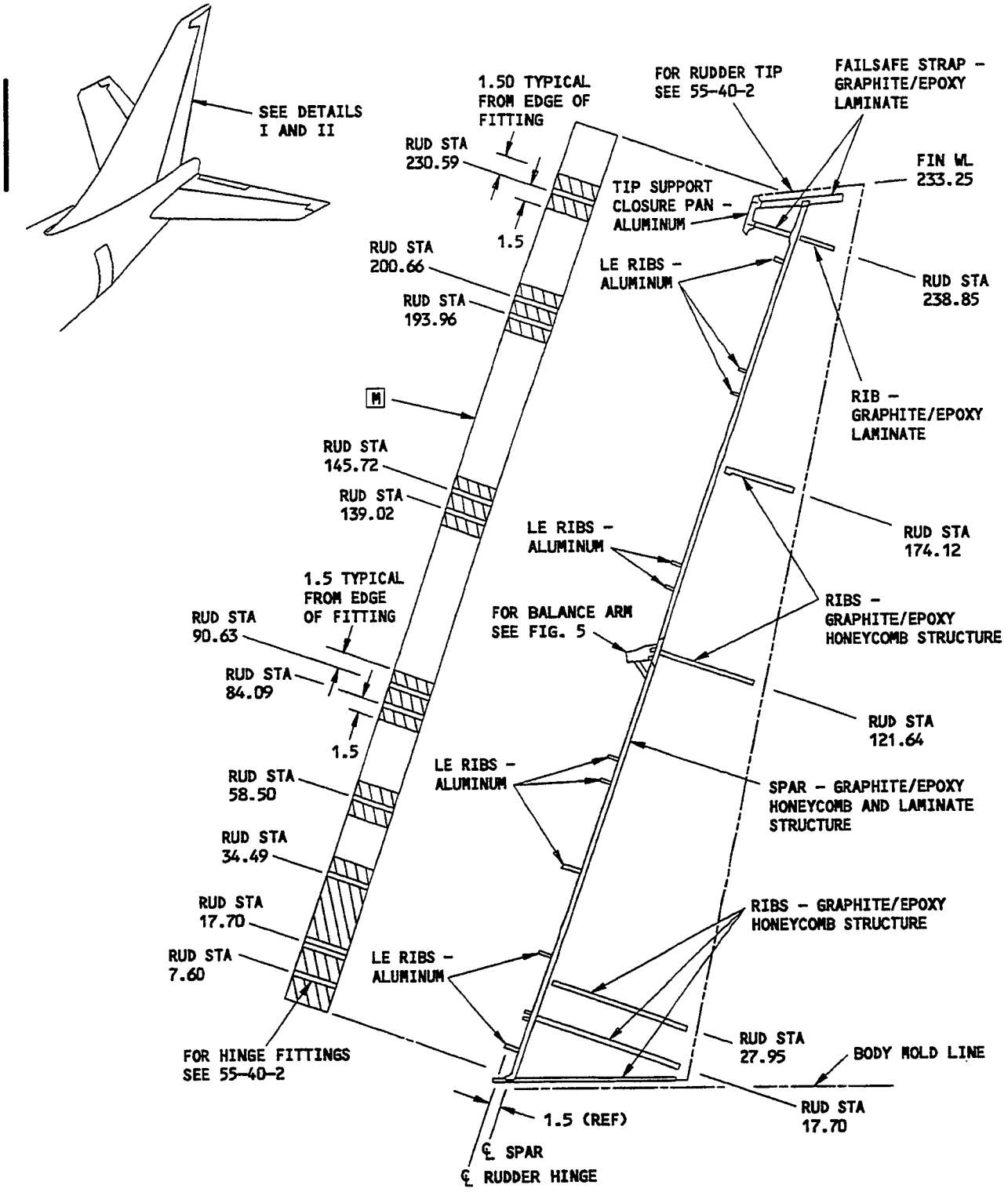


DETAIL I

Rudder Structure Allowable Damage (Graphite Composite Rudder)
Figure 4 (Sheet 1)

141823

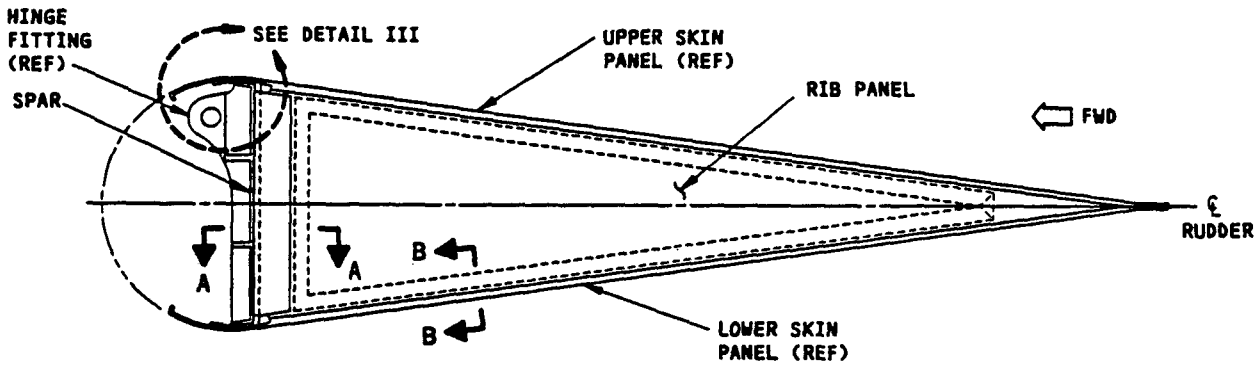


VIEW AT RIB LOCATION

DETAIL II

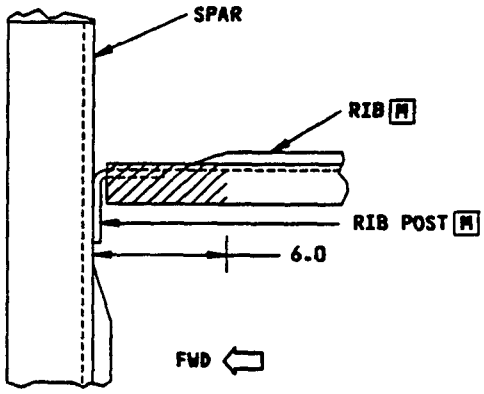


SECTION A-A

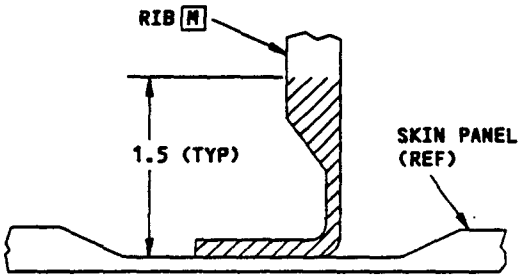


SECTION B-B

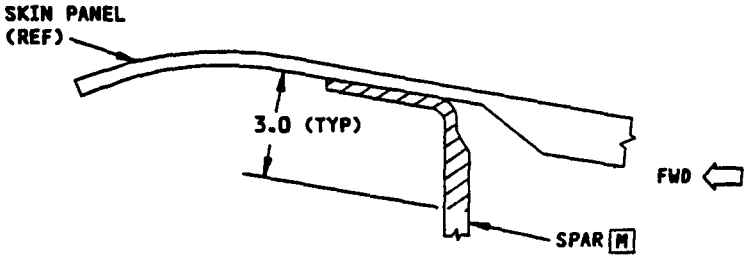


VIEW OF SPAR AT SKIN PANEL

DETAIL III

Rudder Structure Allowable Damage (Graphite Composite Rudder)
Figure 4 (Sheet 2)

141824

| DESCRIPTION | CRACKS | NICKS, GOUGES, SCRATCHES AND CORROSION | DENTS | HOLES AND PUNCTURES | DELAMINATION |
|---|---|---|---|---|---|
| LE RIBS - ALUMINUM | B | E | G | I | ——— |
| CLOSURE PAN TIP SUPPORT - ALUMINUM | B | E | G | I | ——— |
| FAILSAFE STRAPS - GRAPHITE/EPOXY LAMINATE | C | F | H | J | K |
| RIBS & SPAR - GRAPHITE/EPOXY LAMINATE | C | F | H | J | K |
| RIBS & SPAR - GRAPHITE/EPOXY HONEYCOMB STRUCTURE | D | F | H | J | L |

ALLOWABLE DAMAGE DATA

NOTES

- THE ALLOWABLE DAMAGE LIMITS GIVEN IN THIS FIGURE WILL NOT HAVE AN EFFECT ON A STRUCTURALLY SIGNIFICANT ITEM (SSI) GIVEN IN SRM 51-00-4, FIG. 3. THUS, NO CHANGE TO THE SUPPLEMENTAL STRUCTURAL INSPECTION DOCUMENT (SSID) INSPECTION PROGRAM IS NECESSARY.
- FOR INVESTIGATION AND CLEANUP OF DAMAGE REFER TO 51-10.
- D = MAXIMUM DAMAGE DIMENSION
- FOR REWORKED ALUMINUM AREAS APPLY A PROTECTIVE ALODINE COATING PER 51-10-2.
- REFER TO 51-70 FOR AERODYNAMIC SMOOTHNESS REQUIREMENTS. WHERE THE DAMAGE EXCEEDS THE LIMITS SHOWN IN 51-70, CONSIDERATION SHOULD BE GIVEN TO THE LOSS OF PERFORMANCE INVOLVED.
- TYPICAL DAMAGE TO A PANEL EDGEBAND OR EDGE OF LAMINATE MAY CONSIST OF EDGE CRUSHING, CRACKS OR DELAMINATION. DAMAGE AROUND HOLES MAY CONSIST OF OVALIZATION, FASTENER PULL-THROUGH OR CRACKS OUT OF HOLE. DAMAGE MAY REDUCE THE EFFECTIVE CROSS SECTIONAL AREA OF AN EDGEBAND OR EDGE OF LAMINATE. DAMAGE TO EDGES SHOULD BE BLENDED OUT TO LIMITATIONS GIVEN FOR COMPONENT.

A IT IS RECOMMENDED TO REMOVE MOISTURE FROM THE DAMAGED AREA. USE VACUUM AND HEAT (A MAXIMUM OF 150°F [66°C]) TO REMOVE THAT MOISTURE.

CLEAN THE DAMAGED AREA. SEAL THE DAMAGED AREA WITH ALUMINUM FOIL TAPE (SPEED TAPE) 3M-Y436 OR AN EQUIVALENT. KEEP THE QUANTITY OF SPEED TAPE TO A MINIMUM. THE AMOUNT OF SPEED TAPE CAN CHANGE THE BALANCE MOMENT OF THE RUDDER. IF NECESSARY, BALANCE THE RUDDER. REFER TO SRM 51-81-7.

KEEP A RECORD OF THE LOCATION WHERE SPEED TAPE IS INSTALLED. MAKE AN INSPECTION OF THAT LOCATION NO MORE THAN 65 FLIGHT HOURS AFTER THE TAPE IS APPLIED. REPLACE THE TAPE IF IT STARTS TO COME OFF OR DETERIORATION IS FOUND. REPAIR THE DAMAGE NO MORE THAN 60 CALENDAR DAYS AFTER THE TAPE IS APPLIED. IF THE DAMAGE BECOMES LARGER IN LESS THAN 60 CALENDAR DAYS, REPAIR THE DAMAGE NO MORE THAN FIVE FLIGHTS AFTER THAT.

B CLEAN UP EDGE CRACKS PER DETAILS IV AND VIII. OTHER CRACKS NOT ALLOWED

C EDGE CRACKS MUST BE REMOVED PER DETAILS IV AND VIII. 0.50 MAX LENGTH IS ALLOWED PER SQUARE FOOT OF AREA AND A MIN OF 6 INCHES FROM ANY OTHER DAMAGE A

D EDGE CRACKS MUST BE REMOVED PER DETAILS IV AND VIII. 0.50 MAX LENGTH IN HONEYCOMB AREA IS ALLOWED PER SQUARE FOOT OF AREA AND A MIN OF 6 INCHES FROM ANY OTHER DAMAGE A.

E NICKS, GOUGES, SCRATCHES, OR CORROSION REMOVED PER DETAILS IV,V,VII, AND VIII ARE ALLOWED PROVIDED THE MAXIMUM PERMISSIBLE DEPTH OF DAMAGE IS NOT EXCEEDED. NICKS, GOUGES AND SCRATCHES THAT DO NOT PENETRATE ALL THE WAY THRU CLAD SURFACES MAY BE IGNORED

F DAMAGE ALLOWED ON SURFACE RESIN ONLY. DAMAGE TO FIBERS NOT ALLOWED. CLEAN UP EDGE DAMAGE PER DETAIL IV OR V A.

G DENTS ALLOWED PER DETAIL VI.

H DENTS GENERALLY RESULT IN FIBER DAMAGE OR DELAMINATION. HOWEVER, PROVIDED THAT THERE IS NO FIBER DAMAGE OR DELAMINATION, DENTS UP TO 0.50 DIA MAX ARE ALLOWED. ONE DENT PER SQUARE FOOT OF AREA ALLOWED WHICH MUST BE A MINIMUM OF 4D FROM ANY OTHER DAMAGE, FASTENER HOLE, OR PART EDGE.

Rudder Structure Allowable Damage (Graphite Composite Rudder)
Figure 4 (Sheet 3)


BOEING PROPRIETARY - Copyright © - Unpublished Work - See title page for details.

NOTES (CONT)

[I] HOLES UP TO 0.25 DIAMETER ARE ALLOWED PROVIDED THEY ARE LOCATED 4D FROM ANY OTHER HOLE, FASTENER, PART EDGE, OR OTHER DAMAGE AND ARE FILLED WITH 2117-T3 OR 2117-T4 ALUMINUM RIVETS. ALUMINUM RIVETS TO BE INSTALLED WET WITH BMS 5-95 SEALANT. ALUMINUM PLUG RIVETS ARE AUTHORIZED ONLY IN ALUMINUM STRUCTURE LISTED IN THE ABOVE TABLE

[J] 0.50 MAX DIA ALLOWED PROVIDED DAMAGE IS A MIN OF 6D FROM ANY OTHER DAMAGE, FASTENER HOLE, OR PART EDGE. DO NOT CLEAN UP DAMAGE EXCEPT TO REMOVE RESIN BURRS EXTENDING INTO SURFACE CONTOUR

[K] 1.0 SQUARE INCH ALLOWED PER SQUARE FOOT OF AREA PROVIDED DAMAGE IS A MINIMUM OF 6.0 INCHES FROM ANY OTHER DAMAGE AND 1.0 INCH FROM ANY HOLE OR PART EDGE. A MAXIMUM OF 0.10 INCH DELAMINATION FROM PART EDGE IS ALLOWED [A]

[L] 0.50 MAX DIA ALLOWED PER SQUARE FOOT OF AREA PROVIDED DAMAGE IS A MINIMUM OF 6.0 INCHES FROM ANY OTHER DAMAGE AND 1.0 INCH FROM ANY OTHER HOLE OR PART EDGE. A MAXIMUM OF 0.10 INCH DELAMINATION FROM PART EDGE IS ALLOWED [A]

[M] DAMAGE NOT ALLOWED IN CRITICAL AREAS (SHADED). CONTACT THE BOEING COMPANY FOR REWORK DATA IN SHADED AREAS

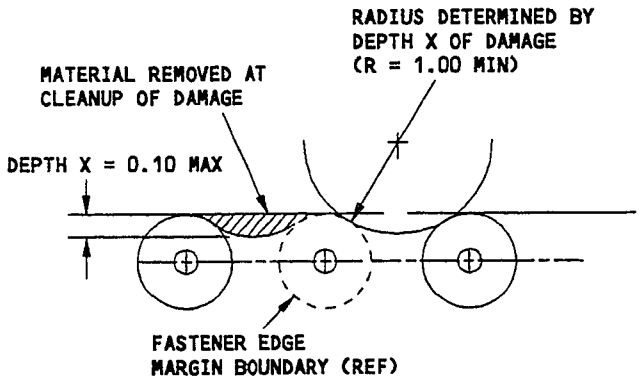


DAMAGE CLEANUP OF EDGES WHERE FASTENER EDGE MARGINS DO NOT OVERLAP

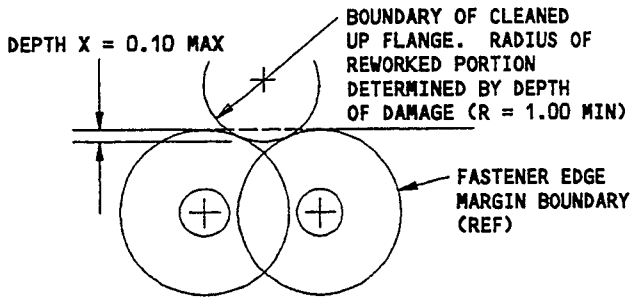


DAMAGE CLEANUP OF EDGES WHERE FASTENER EDGE MARGINS OVERLAP

DETAIL IV

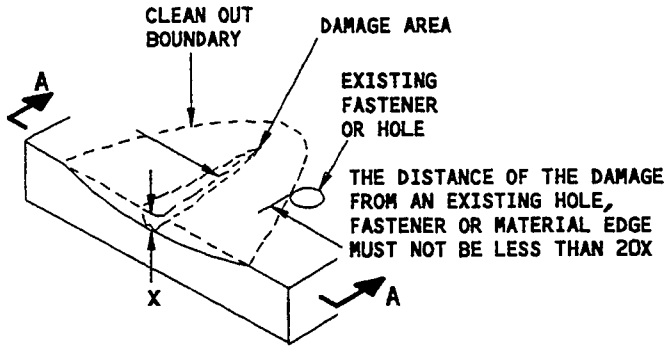


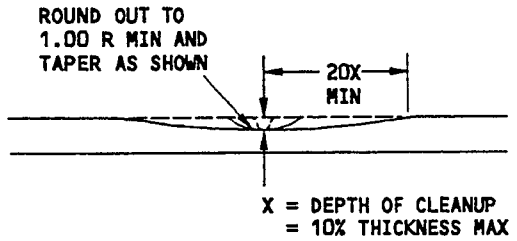


SECTION A-A

REMOVAL OF NICK, GOUGE, SCRATCH, AND CORROSION DAMAGE ON A SURFACE
DETAIL V

Rudder Structure Allowable Damage (Graphite Composite Rudder)
Figure 4 (Sheet 4)

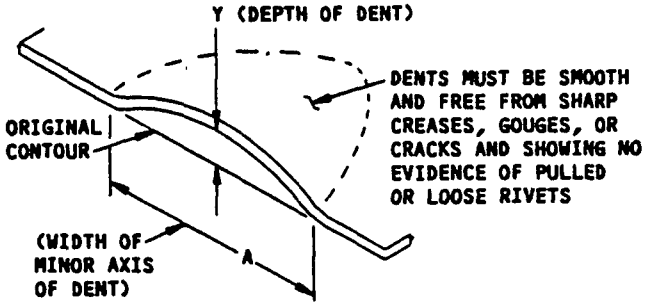


$\frac{A}{Y}$ MUST NOT BE LESS THAN 10

A = 1.25 MAX

DETAIL VI

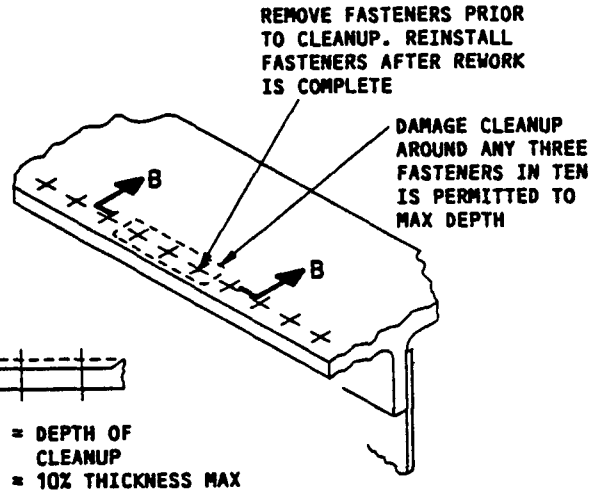


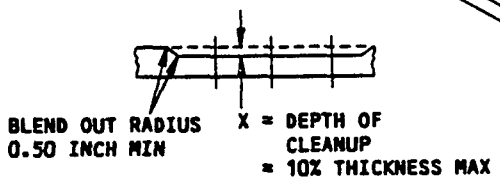


SECTION B-B

DAMAGE CLEANUP
DETAIL VII

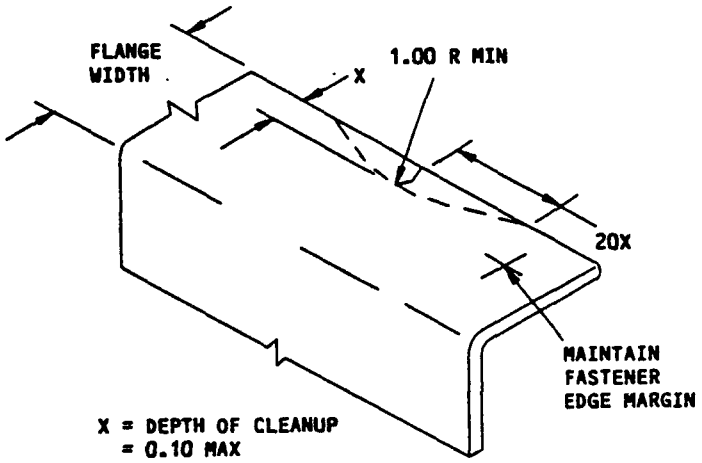


REMOVAL OF DAMAGE ON AN EDGE
DETAIL VIII

Rudder Structure Allowable Damage (Graphite Composite Rudder)
Figure 4 (Sheet 5)

141828

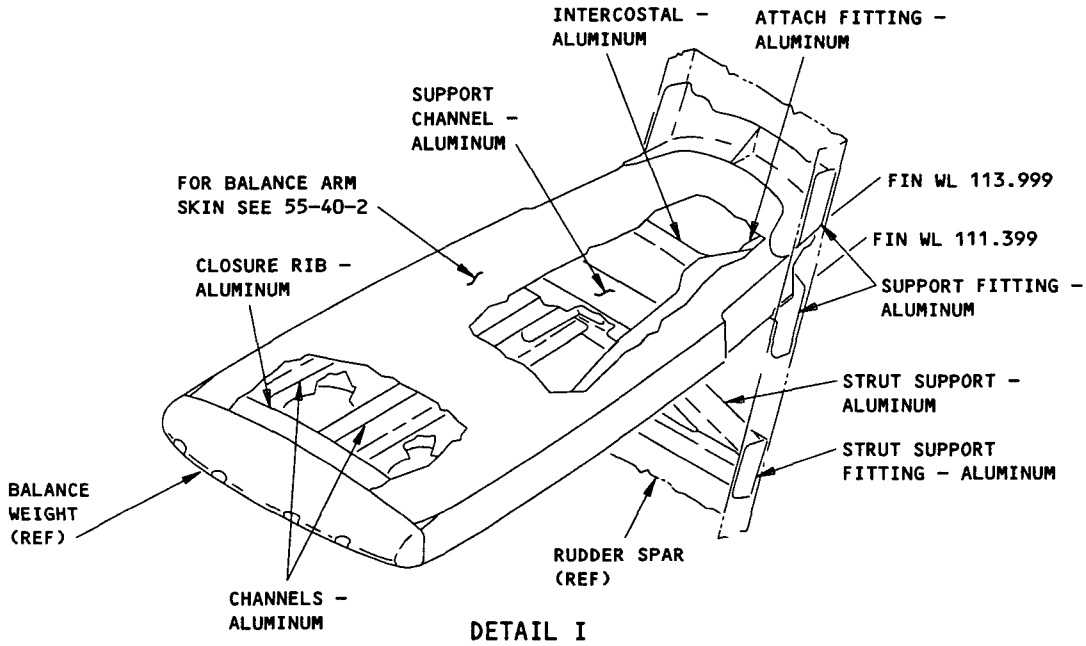


DETAIL I

| DESCRIPTION | CRACKS | NICKS, GOUGES, SCRATCHES AND CORROSION | DENTS | HOLES AND PUNCTURES |
|---|---|---|---|---|
| RIBS | A | B | C | D |
| CHANNELS | A | B | NOT ALLOWED | D |
| INTERCOSTALS AND STRUT SUPPORT | A | B | NOT ALLOWED | NOT ALLOWED |
| FITTINGS E | A | B | NOT ALLOWED | NOT ALLOWED |

ALLOWABLE DAMAGE FOR DETAIL I

NOTES

- THE ALLOWABLE DAMAGE LIMITS GIVEN IN THIS FIGURE WILL NOT HAVE AN EFECT ON A STRUCTURALLY SIGNIFICANT ITEM (SSI) GIVEN IN SRM 51-00-4, FIG. 3. THUS, NO CHANGE TO THE SUPPLEMENTAL STRUCTURAL INSPECTION DOCUMENT (SSID) INSPECTION PROGRAM IS NECESSARY.
- FOR INVESTIGATION AND CLEANUP OF DAMAGE, REFER TO 51-10
- FOR REWORKED ALUMINUM AREAS APPLY A PROTECTIVE ALODINE COATING PER 51-10-2
- REFINISH REWORKED AREAS PER 51-20 OF THE MAINTENANCE MANUAL

A CLEAN UP EDGE CRACKS PER DETAILS II AND VI. OTHER CRACKS NOT ALLOWED

B NICKS, GOUGES, SCRATCHES, OR CORROSION REMOVED PER DETAILS II,III,V, AND VI ARE ALLOWED PROVIDED THE MAXIMUM PERMISSIBLE DEPTH OF DAMAGE IS NOT EXCEEDED. NICKS, GOUGES, AND SCRATCHES THAT DO NOT PENETRATE ALL THE WAY THROUGH CLAD SURFACES MAY BE IGNORED

C DENTS ALLOWED PER DETAIL IV

D HOLES UP TO 0.25 DIAMETER ARE ALLOWED PROVIDED THEY ARE LOCATED 4D FROM ANY OTHER HOLE, FASTENER, PART EDGE OR OTHER DAMAGE AND ARE FILLED WITH 2117-T3 OR T4 ALUMINUM RIVETS. ALUMINUM RIVETS TO BE INSTALLED WET WITH BMS 5-95 SEALANT. D = FILLED HOLE DIAMETER

E SHOT PEEN REWORKED AREAS PER 20-10-03 OF THE 737-200 OVERHAUL MANUAL

Rudder Balance Arm Structure Allowable Damage (Graphite Composite Rudder)
Figure 5 (Sheet 1)


BOEING PROPRIETARY - Copyright © - Unpublished Work - See title page for details.

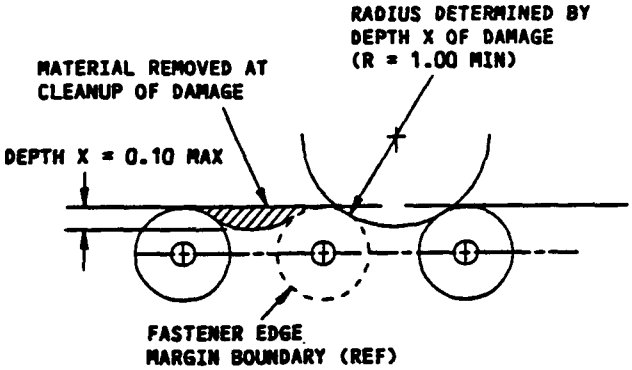


DAMAGE CLEANUP OF EDGES WHERE FASTENER EDGE MARGINS DO NOT OVERLAP

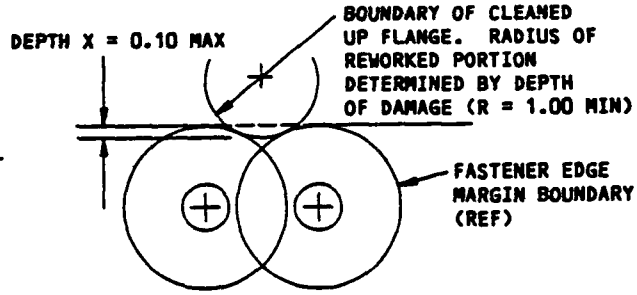


DAMAGE CLEANUP OF EDGES WHERE FASTENER EDGE MARGINS OVERLAP

DETAIL II

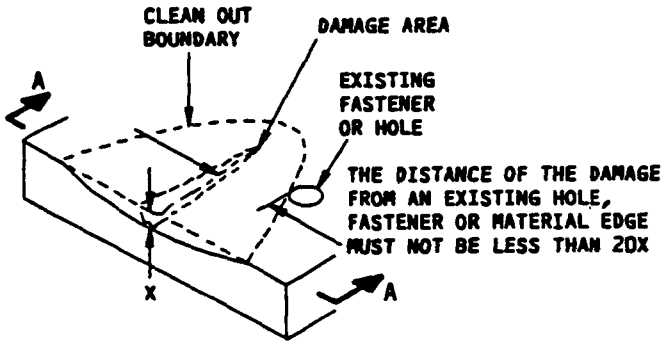


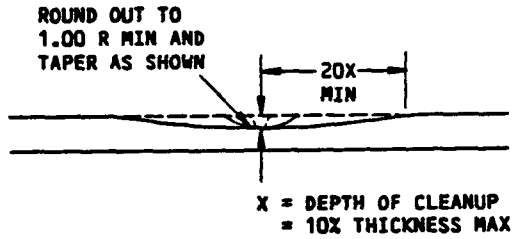


SECTION A-A

REMOVAL OF NICK, GOUGE, SCRATCH AND CORROSION DAMAGE ON A SURFACE
DETAIL III

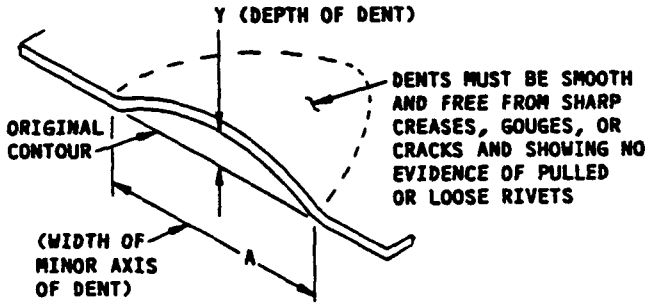


$\frac{A}{Y}$ MUST NOT BE LESS THAN 30

'A' MUST NOT BE GREATER THAN 1.5 INCHES

DETAIL VI

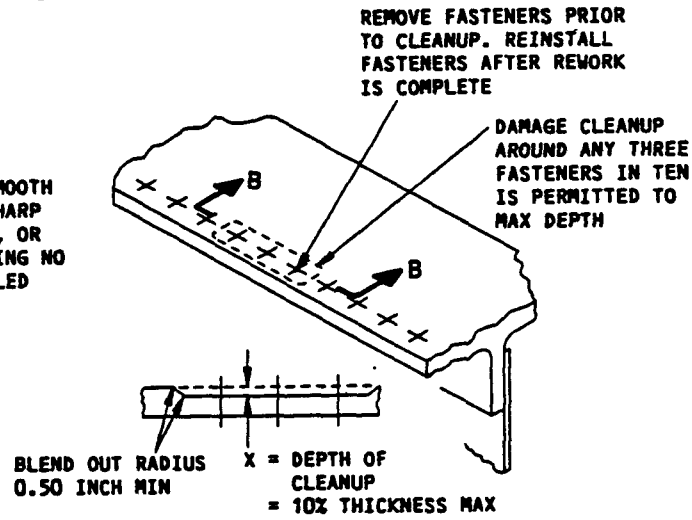


SECTION B-B
DAMAGE CLEANUP
DETAIL VI

Rudder Balance Arm Structure Allowable Damage (Graphite Composite Rudder)
Figure 5 (Sheet 2)

141953

000068

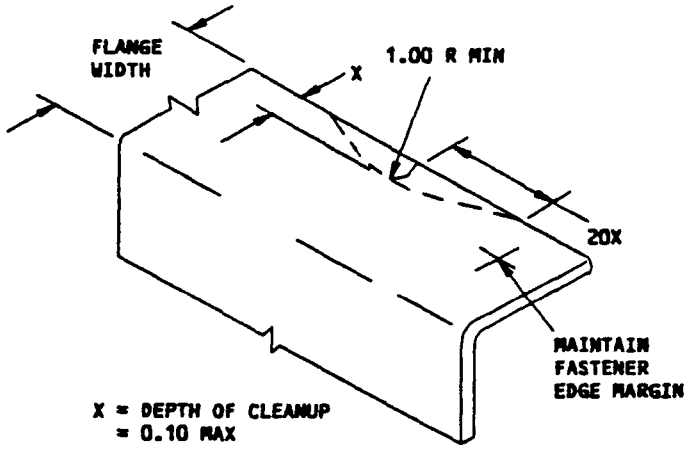


REMOVAL OF DAMAGE ON AN EDGE
DETAIL VI

Rudder Balance Arm Structure Allowable Damage (Graphite Composite Rudder)
Figure 5 (Sheet 3)

141956

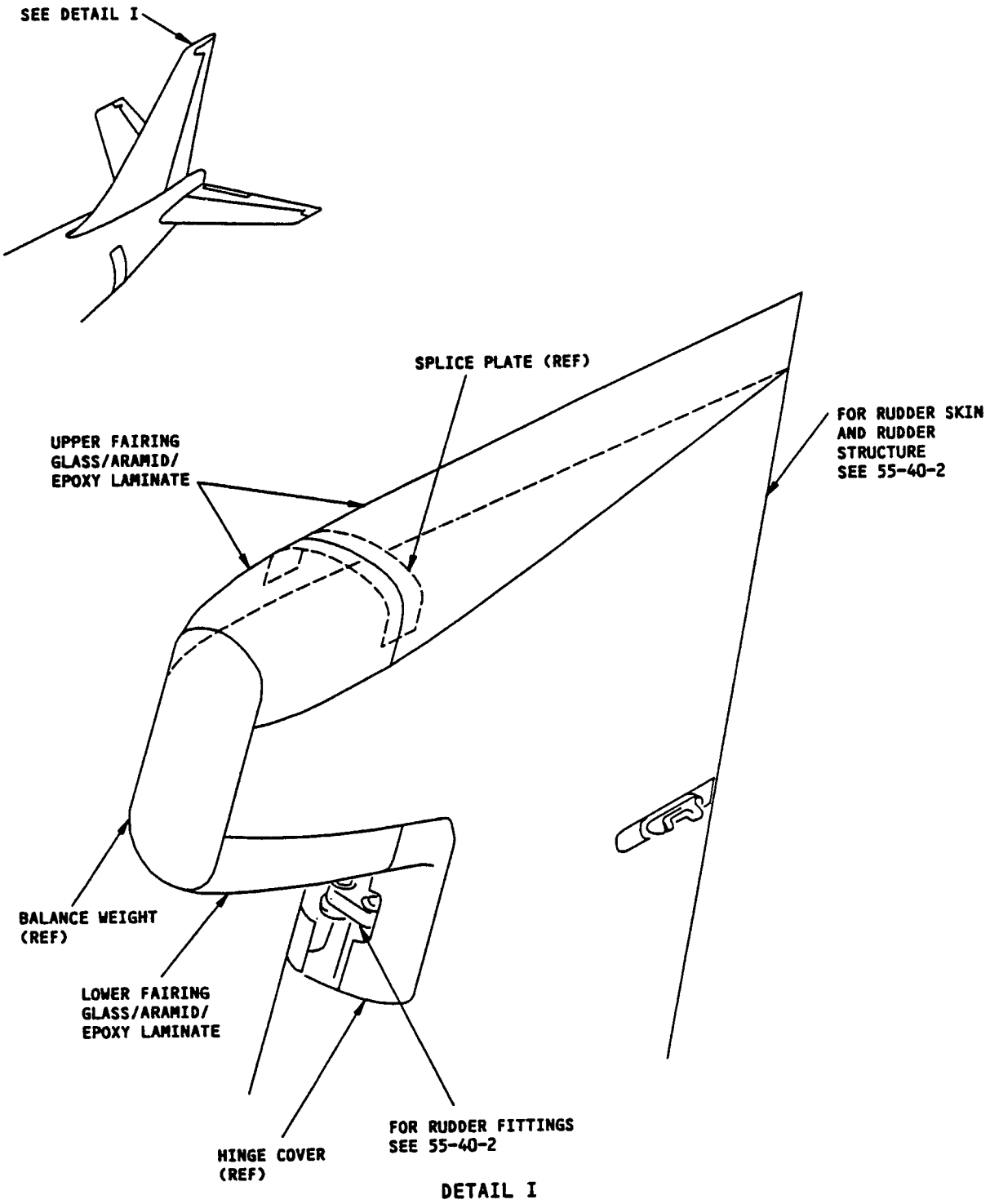


Rudder Tip Allowable Damage (Graphite Composite Rudder)
Figure 6 (Sheet 1)

141980

| DESCRIPTION | CRACKS | NICKS, GOUGES, AND SCRATCHES | DENTS | HOLES AND PUNCTURES | DELAMINATION |
|---|---|---|---|---|---|
| FAIRING SKIN - GLASS/ARAMID/EPOXY LAMINATE | B | C | D | E | F |

ALLOWABLE DAMAGE FOR DETAIL I

NOTES

- THE ALLOWABLE DAMAGE LIMITS GIVEN IN THIS FIGURE WILL NOT HAVE AN EFFECT ON A STRUCTURALLY SIGNIFICANT ITEM (SSI) GIVEN IN SRM 51-00-4, FIG. 3. THUS, NO CHANGE TO THE SUPPLEMENTAL STRUCTURAL INSPECTION DOCUMENT (SSID) INSPECTION PROGRAM IS NECESSARY.
- FOR INVESTIGATION AND CLEANUP OF DAMAGE, REFER TO 51-10
- REFER TO 51-40-09 FOR ALLOWABLE DAMAGE TO ALUMINUM FLAME SPRAYED AREA
- REFINISH REWORKED AREAS PER 51-20 OF THE MAINTENANCE MANUAL
- REFER TO 51-70 FOR AERODYNAMIC SMOOTHNESS REQUIREMENTS. WHERE THE DAMAGE EXCEEDS THE LIMITS SHOWN IN 51-70, CONSIDERATION SHOULD BE GIVEN TO THE LOSS OF PERFORMANCE INVOLVED
- TYPICAL DAMAGE TO A PANEL EDGE MAY CONSIST OF EDGE CRUSHING, CRACKS OR DELAMINATION. DAMAGE AROUND HOLES MAY CONSIST OF OVALIZATION, FASTENER PULL-THROUGH OR CRACKS OUT OF HOLE. DAMAGE MAY REDUCE THE EFFECTIVE CROSS SECTIONAL AREA OF AN EDGE. DAMAGE TO EDGES SHOULD BE BLENDED OUT TO LIMITATIONS GIVEN FOR COMPONENT

A IT IS RECOMMENDED TO REMOVE MOISTURE FROM THE DAMAGED AREA. USE VACUUM AND HEAT (A MAXIMUM OF 150°F [66°C]) TO REMOVE THAT MOISTURE.

CLEAN THE DAMAGED AREA. SEAL THE DAMAGED AREA WITH ALUMINUM FOIL TAPE (SPEED TAPE) 3M-Y436 OR AN EQUIVALENT. KEEP THE QUANTITY OF SPEED TAPE TO A MINIMUM. THE AMOUNT OF SPEED TAPE CAN CHANGE THE BALANCE MOMENT OF THE RUDDER. IF NECESSARY, BALANCE THE RUDDER. REFER TO SRM 51-81-7.

KEEP A RECORD OF THE LOCATION WHERE SPEED TAPE IS INSTALLED. MAKE AN INSPECTION OF THAT LOCATION NO MORE THAN 65 FLIGHT HOURS AFTER THE TAPE IS APPLIED. REPLACE THE TAPE IF IT STARTS TO COME OFF OR DETERIORATION IS FOUND. REPAIR THE DAMAGE NO MORE THAN 60 CALENDAR DAYS AFTER THE TAPE IS APPLIED. IF THE DAMAGE BECOMES LARGER IN LESS THAN 60 CALENDAR DAYS, REPAIR THE DAMAGE NO MORE THAN FIVE FLIGHTS AFTER THAT.

B EDGE CRACKS MUST BE AT LEAST 2.5 D FROM FASTENER HOLES WHERE D= FASTENER DIAMETER. DAMAGED MATERIAL MUST BE REMOVED PER DETAILS II AND III. 0.50 MAX CRACK LENGTH IN HONEYCOMB AREA IS ALLOWED PER SQUARE FOOT OF AREA AND MINIMUM OF 6.0 INCHES FROM ANY OTHER DAMAGE OR HOLE. A

C DAMAGE ALLOWED ON SURFACE RESIN ONLY. DAMAGE TO FIBERS NOT ALLOWED. CLEAN UP EDGE DAMAGE PER DETAILS II AND III A

D DENTS GENERALLY RESULT IN FIBER DAMAGE OR DELAMINATION. HOWEVER, IF THERE IS NO FIBER DAMAGE OR DELAMINATION, DENTS UP TO 0.50 DIA MAX ARE ALLOWED. ONE DENT PER SQUARE FOOT OF AREA ALLOWED WHICH MUST BE A MINIMUM OF 4D FROM ANY OTHER DAMAGE, FASTENER HOLE, OR PANEL EDGE, WHERE D= MAX DAMAGE DIMENSION. IF FIBER DAMAGE IS PRESENT, REFER TO THE APPLICABLE DAMAGE DATA IN TABLE

E 0.50 MAX DIA ALLOWED PROVIDED DAMAGE IS MIN OF 6.0 D FROM OTHER DAMAGE, NEAREST HOLE, OR MATERIAL EDGE WHERE D= MAX DAMAGE DIMENSION. DO NOT CLEAN UP DAMAGE EXCEPT TO REMOVE RESIN BURRS EXTENDING INTO SURFACE CONTOUR. A

F 0.50 MAX DIA IS ALLOWED PER SQUARE FOOT OF AREA AND A MINIMUM OF 6.0 INCHES FROM ANY OTHER DAMAGE AND 1.0 INCH FROM ANY HOLE OR EDGE. A MAXIMUM OF 0.03 INCH DELAMINATION FROM EDGE IS ALLOWED. A EDGE DELAMINATIONS UP TO A MAXIMUM LENGTH OF 2.0 INCHES AND A DEPTH OF 0.5 INCH CAN BE SEALED AS FOLLOWS:

- APPLY ONE LAYER OF SPEED TAPE WHICH EXTENDS OUT 2 INCHES ALL AROUND THE DAMAGE
- APPLY A SECOND LAYER OF SPEED TAPE WHICH EXTENDS OUT 1.00 INCH ALL AROUND THE EDGES OF THE FIRST LAYER OF SPEED TAPE.

THESE DAMAGE LOCATIONS MUST BE A MINIMUM OF 10 TIMES THE DAMAGE LENGTH (EDGE TO EDGE) FROM OTHER DAMAGE LOCATIONS.

Rudder Tip Allowable Damage (Graphite Composite Rudder)
Figure 6 (Sheet 2)


BOEING PROPRIETARY - Copyright © - Unpublished Work - See title page for details.

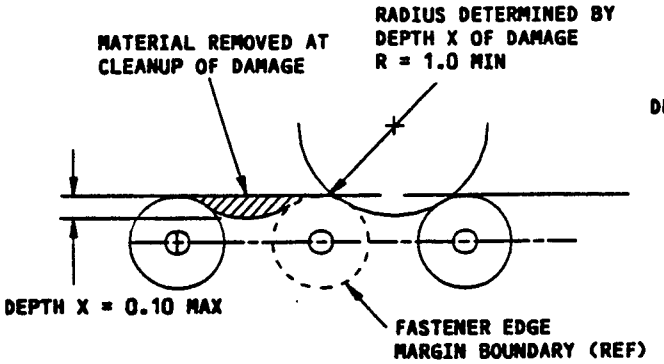


DAMAGE CLEANUP OF EDGES WHERE FASTENER EDGE MARGINS DO NOT OVERLAP

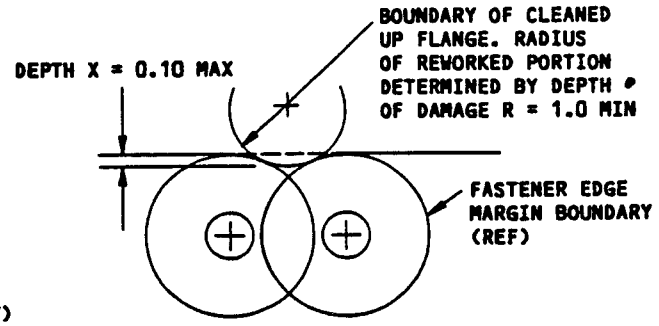


DAMAGE CLEANUP OF EDGES WHERE FASTENER EDGE MARGINS OVERLAP

DETAIL II

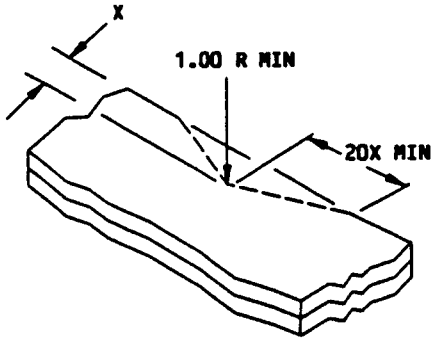


X = DEPTH OF CLEANUP = 0.10 MAX

REMOVAL OF DAMAGE ON AN EDGE
DETAIL III

Rudder Tip Allowable Damage (Graphite Composite Rudder)
Figure 6 (Sheet 3)

141966

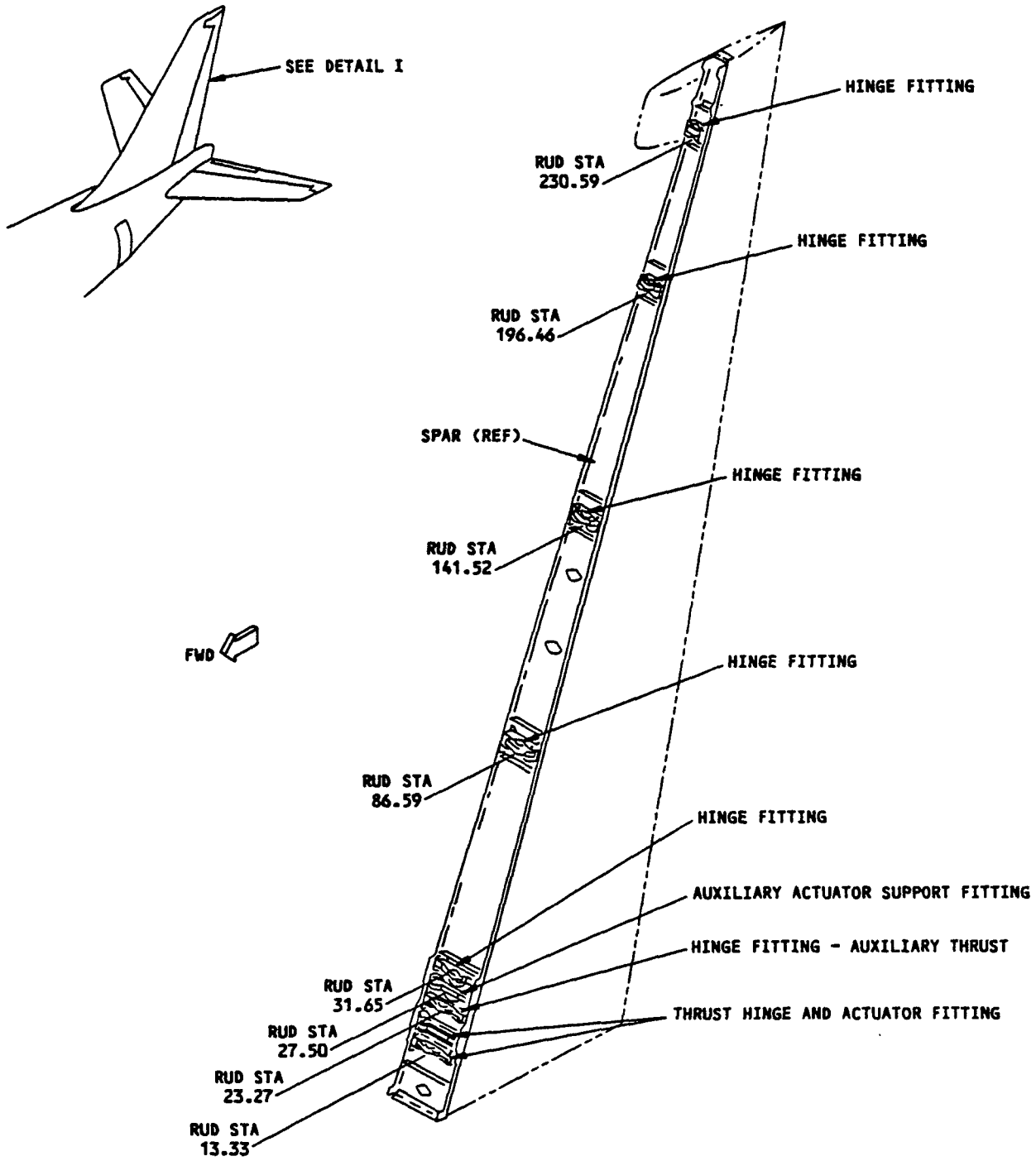


DETAIL I

Rudder Fitting Allowable Damage (Graphite Composite Rudder)
Figure 7 (Sheet 1)

141977

| DESCRIPTION | CRACKS | NICKS, GOUGES, SCRATCHES AND CORROSION | DENTS | HOLES AND PUNCTURES |
|---|---|---|---|---|
| HINGE FITTING [C] [D] | [A] | [B] | NOT ALLOWED | NOT ALLOWED |
| SUPPORT FITTING [C] [D] | [A] | [B] | NOT ALLOWED | NOT ALLOWED |
| ACTUATOR FITTING [C] [D] | [A] | [B] | NOT ALLOWED | NOT ALLOWED |

ALLOWABLE DAMAGE FOR DETAIL I

NOTES

- THE ALLOWABLE DAMAGE LIMITS GIVEN IN THIS FIGURE WILL NOT HAVE AN EFFECT ON A STRUCTURALLY SIGNIFICANT ITEM (SSI) GIVEN IN SRM 51-00-4, FIG. 3. THUS, NO CHANGE TO THE SUPPLEMENTAL STRUCTURAL INSPECTION DOCUMENT (SSID) INSPECTION PROGRAM IS NECESSARY.
- FOR INVESTIGATION AND CLEANUP OF DAMAGE REFER TO 51-10
- FOR REWORKED ALUMINUM AREAS APPLY A PROTECTIVE ALODINE COATING PER 51-10-2
- REFINISH REWORKED AREAS PER 51-20 OF THE MAINTENANCE MANUAL

[A] CLEAN UP EDGE CRACKS PER DETAILS II AND V. OTHER CRACKS NOT ALLOWED

[B] FOR EDGE DAMAGE SEE DETAILS II AND VI. FOR OTHER DAMAGE SEE DETAIL III. FOR LUG DAMAGE SEE DETAIL IV. [C]

[C] DAMAGE CLEANUP IS NOT ALLOWED ON LUG BORE SURFACE

[D] SHOT PEEN ALL REWORKED AREAS PER 51-10-03 OF THE 737-200 MAINTENANCE MANUAL

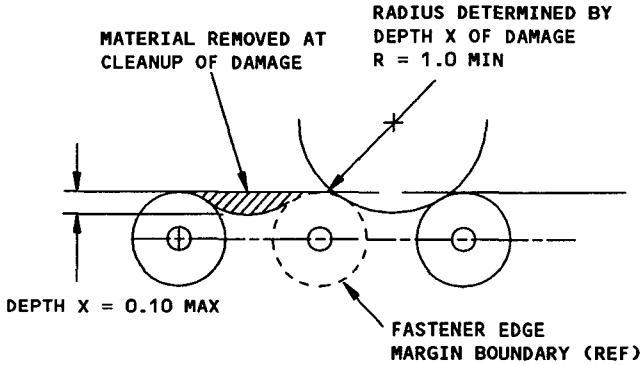


DAMAGE CLEANUP OF EDGES WHERE FASTENER EDGE MARGINS DO NOT OVERLAP

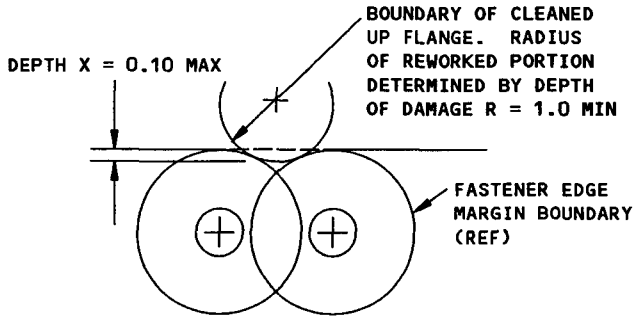


DAMAGE CLEANUP OF EDGES WHERE FASTENER EDGE MARGINS OVERLAP

DETAIL II

Rudder Fitting Allowable Damage (Graphite Composite Rudder)
Figure 7 (Sheet 2)


BOEING PROPRIETARY - Copyright © - Unpublished Work - See title page for details.

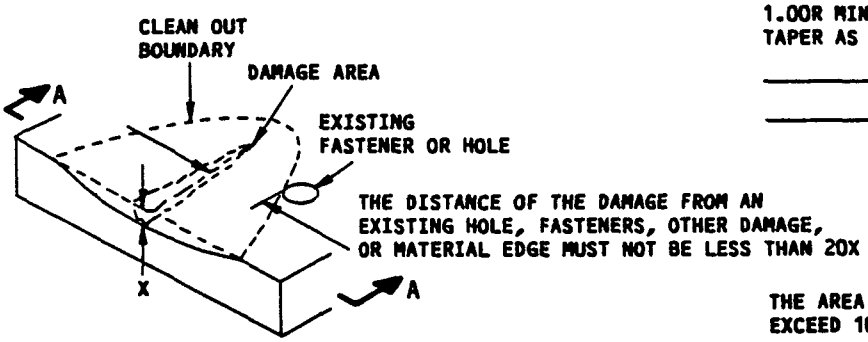


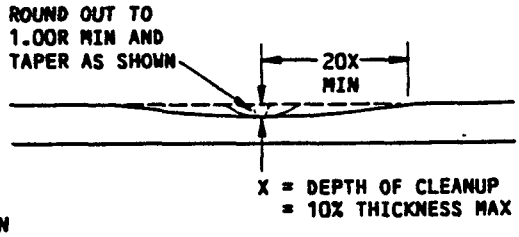


SECTION A-A

THE AREA REMOVED FOR CLEANUP MUST NOT EXCEED 10% OF THE CROSS SECTIONAL AREA

REMOVAL OF NICK, GOUGE, SCRATCH, AND CORROSION DAMAGE ON A SURFACE
DETAIL III

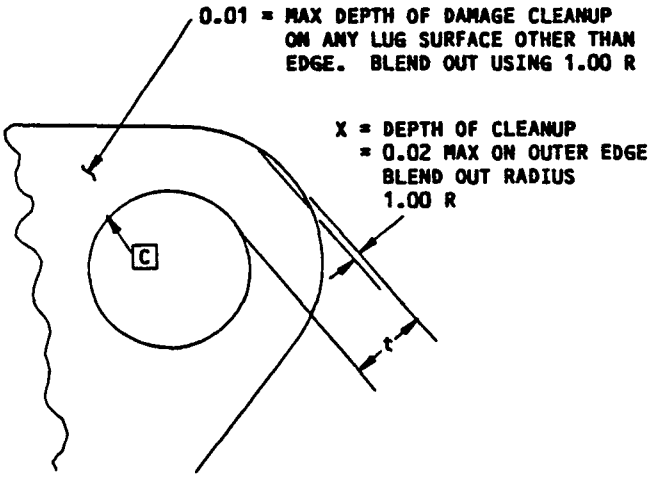


DAMAGE CLEANUP FOR LUG
DETAIL IV

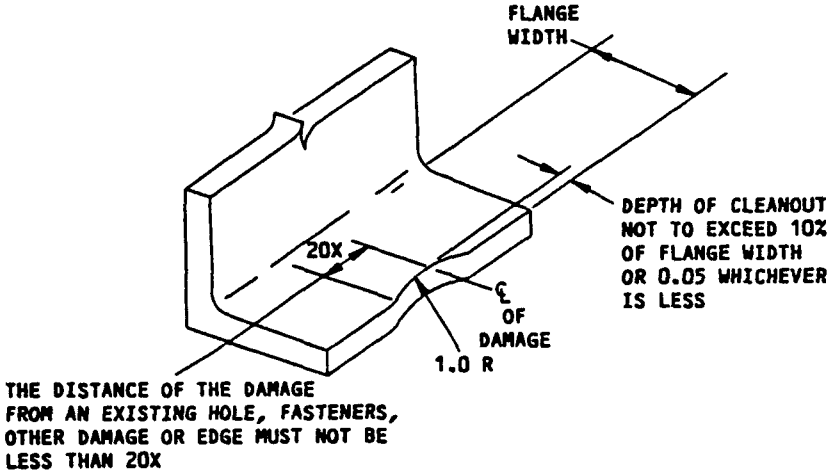


REMOVAL OF EDGE DAMAGE FROM
FREE FLANGE WITHOUT FASTENERS
DETAIL V

Rudder Fitting Allowable Damage (Graphite Composite Rudder)
Figure 7 (Sheet 3)

141974

| ITEM | CHORD | | WEB | |
|---|---|---|---|---|
| | MATERIAL | REPAIR FIG. NO. | MATERIAL | REPAIR FIG. NO. |
| 1 | BAC1506-1907 2024-T3511 | | 0.010 + 0.010 CLAD 2024-T3 | |
| 2 | BAC1506-1908 2024-T42 | | 0.010 + 0.010 CLAD 2024-T3 | |
| 3 | | | 0.050 2024-T3 | |
| 4 | BAC1506-1849 2024-T3511 | 55-40-3 Fig. 1 | 0.020 + 0.020 CLAD 2024-T3 | |
| 5 | BAC1506-1849 2024-T3511 | 55-40-3 Fig. 1 | 0.010 + 0.010 CLAD 2024-T3 | |
| 6 | BAC1506-1843 2024-T3511 | 55-40-3 Fig. 1 | 0.010 + 0.010 CLAD 2024-T3 | |
| 7 | BAC1506-1843 2024-T3511 | 55-40-3 Fig. 1 | | |
| 8 | | | 0.020 CLAD 2024-T3 | |
| 9 | BAC1506-1889 2024-T3511 | 55-40-3 Fig. 1 | 0.016 + 0.016 CLAD 2024-T3 | |
| 10 | BAC1506-1843 2024-T3511 | 55-40-3 Fig. 1 | 0.016 + 0.016 CLAD 2024-T3 | |
| 11 | | | 0.040 2024-T3 | |
| 12 | BAC1514-1746 2024-T3511 | | 0.020 + 0.020 CLAD 2024-T3 | |
| 13 | 7075-T73 DIE FORGING | | | |
| 14 | 7075-T73 DIE FORGING OR 7076-T6 BAR | | | |
| 15 | BAC1506-1848 2024-T3511 | 55-40-4 Fig. 1 | | |

Rudder Structure Identification
(Glass Fabric/Metal Rudder)
Figure 1 (Sheet 1)

| | CHORD | | WEB | |
|---|---|---|---|---|
| ITEM | MATERIAL | REPAIR FIG. NO. | MATERIAL | REPAIR FIG. NO. |
| 16 | AFT SIDE OF LOWER WEB | | 0.040 CLAD 2024-T3 | |
| 17 | | | 0.050 CLAD 2024-T42 | |
| 18 | | | 0.032 CLAD 2024-T4 | |
| 19 | | | 0.040 CLAD 2024-T4 | |
| 20 | 4340 STEEL<br>180,000-200,000 | | | |
| 21 | BAC1505-100602<br>2024-T3511 OR<br>2024-T42 BAR OR<br>7079-T6 FORGED | | | |
| 22 | BAC1505-100601<br>2024-T3511 OR<br>2024-T42 BAR OR<br>7079-T6<br>FORGED | | | |
| 23 | BAC1505-100582<br>2024-T3511 | | | |
| 24 | | | 0.032 CLAD 2024-T42 | |
| 25 | 7075-T73 FORGING | | | |
| 26 | 347 STAINLESS STEEL<br>CASTING AMS5362 | | | |
| 27 | STEEL CASTING QQ-S-681<br>CLASS 2 | | | |
| 28 | | | 0.012 + 0.012<br>CLAD 2024-T3 | |

Rudder Structure Identification
(Glass Fabric/Metal Rudder)
Figure 1 (Sheet 2)

| | CHORDS | | WEB | |
|---|---|---|---|---|
| ITEM | MATERIAL | REPAIR FIG. NO. | MATERIAL | REPAIR FIG. NO. |
| | BAC1514-2200<br>2024-T3511<br><br>BAC1514-2200<br>2024-T3511 | | 0.012 + 0.012<br>CLAD 2024-T3<br><br>0.063 CLAD 2024-T3<br><br>INNER SKIN<br>0.012 2024-T42<br>DOUBLER 0.012 + 0.012<br>2024-T3<br>CORE HONEYCOMB OUTER<br>SKIN 0.016 2024-T3 | |

NOTES

- THIS FIGURE APPLIES TO GLASS FABRIC/METAL RUDDERS DELIVERED ON 737-100 AND 737-200 AIRPLANES, CUM LINE NUMBERS: 1 THRU 1000, 1002,1004 THRU 1006,1008 THRU 1011,1014, 1016,1017,1059,1135,1143,1151,1154,1155, 1165,1167,1176,1178,1223,1226,1236

[A] FOR CUM LINE NUMBERS: 1 THRU 59

[B] FOR CUM LINE NUMBERS: 60 THRU 181 AND 1 THRU 59 WITH SB 55-1004 INCORPORATED

[C] FOR CUM LINE NUMBERS: 182 AND ON

[D] FOR AIRPLANES WITH 3-BALANCE ARM RUDDERS

[E] FOR AIRPLANES MANUFACTURED WITH 3-BALANCE ARM RUDDERS ON WHICH SB 55-1010 HAS BEEN INCORPORATED

[F] FOR AIRPLANES MANUFACTURED WITH 2-BALANCE ARM RUDDERS

[G] FOR CUM LINE NUMBERS: 38,54

[H] DELETED

[I] THE SKIN AND THE CORE OF THIS PANEL ARE AS FOLLOWS:

SKIN: GLASS/EPOXY FABRIC, BMS 8-79, CLASS I, TYPE 0

CORE: NON-METALLIC HONEYCOMB, BMS 8-124, CLASS I, TYPE 1, GRADE 4

[J] THE SKIN AND THE CORE OF THIS PANEL ARE AS FOLLOWS:

SKIN: GLASS/EPOXY FABRIC, BMS 8-79, CLASS I, TYPE 120

CORE: NON-METALLIC HONEYCOMB, BMS 8-124, CLASS I, TYPE 1, GRADE 4

[K] FOR CUM LINE NUMBERS: 1 THRU 391

[L] FOR AIRPLANES NOT GIVEN IN [K]

[M] FOR CUM LINE NUMBERS: 1 THRU 287,289, AND 291

[N] FOR AIRPLANE NOT GIVEN IN [M]

[O] THIS PANEL IS MADE OF LAMINATED PLIES OF BMS 8-79, CLASS I, TYPE 1 OR 2 (ALTERNATIVE BMS 8-79, TYPE 181)

Rudder Structure Identification (Glass Fabric/Metal Rudder)
Figure 1 (Sheet 3)

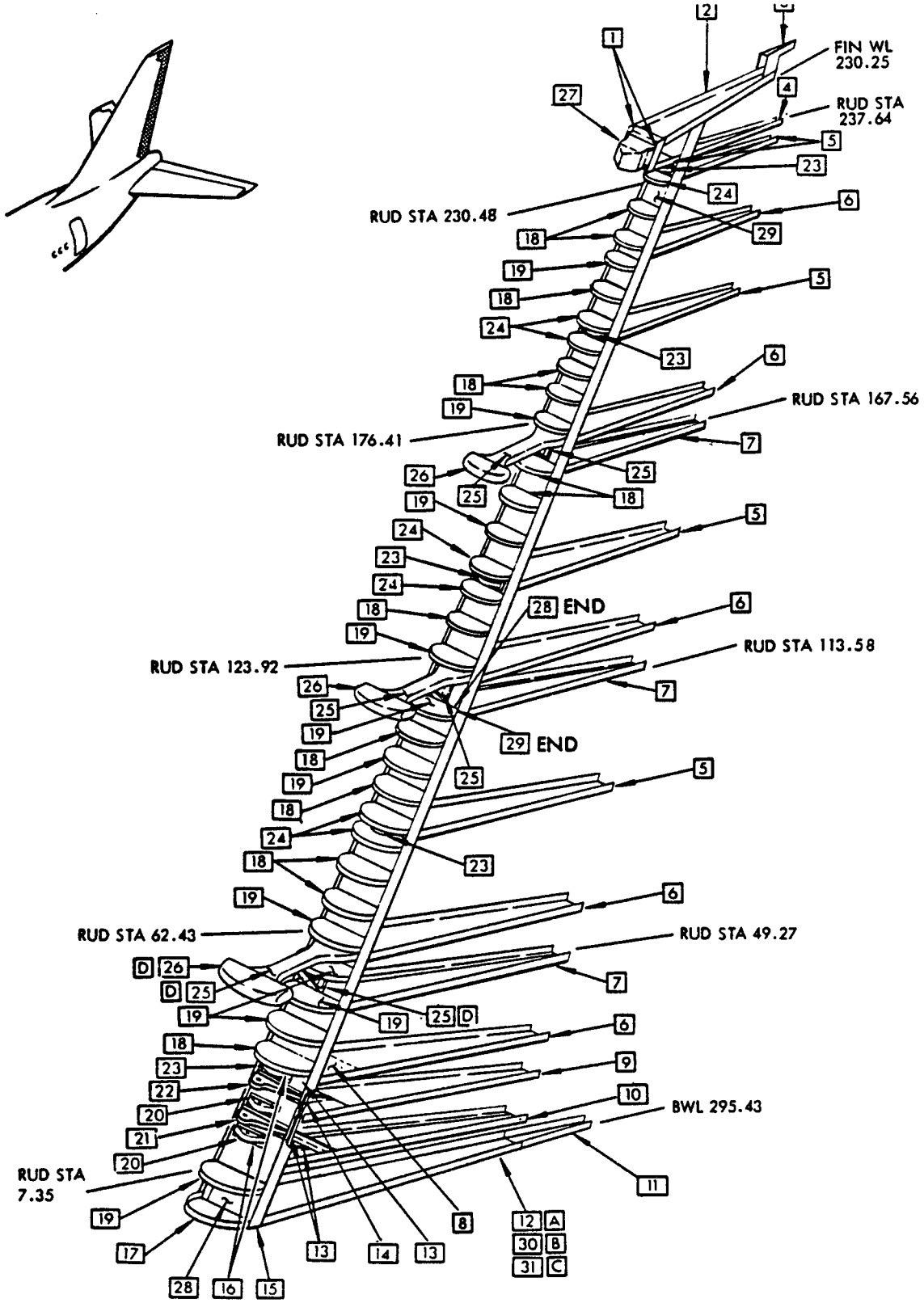


Rudder Structure Identification
(Glass Fabric/Metal Rudder)
Figure 1 (Sheet 4)

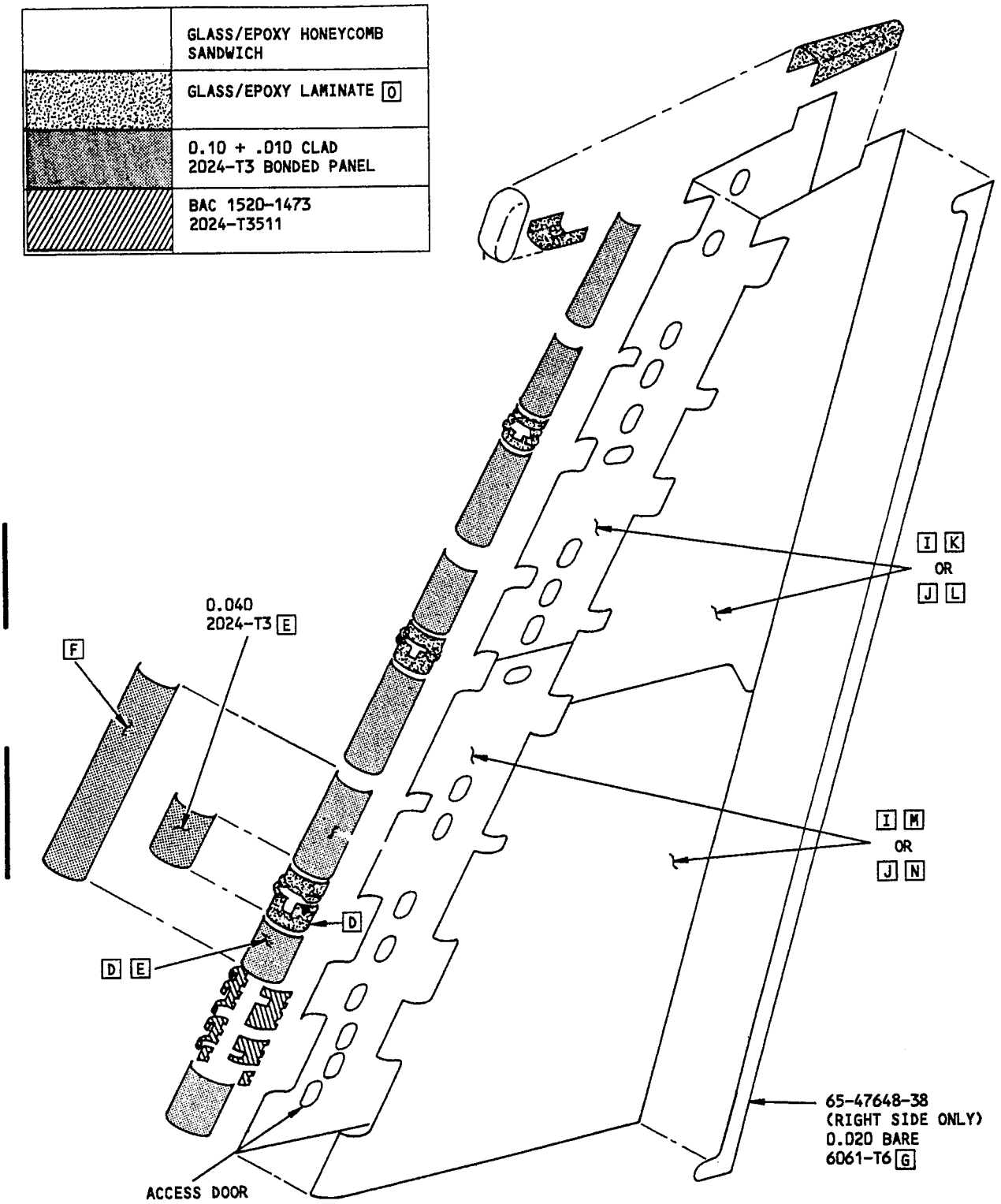


Rudder Structure Identification (Glass Fabric/Metal Rudder)
Figure 1 (Sheet 5)

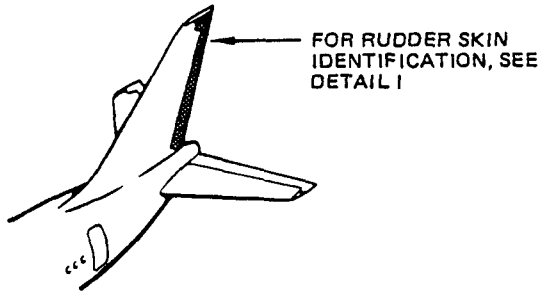


NOTES

- THIS FIGURE APPLIES ONLY TO GRAPHITE COMPOSITE RUDDERS ON 737-200 AIRPLANES WITH CUM LINE NUMBERS: 1003, 1012, 1013, 1018 THRU 1058, 1060 THRU 1120, 1186 THRU 1203, 1241 THRU 1585

[A] PLY ORIENTATION CONVENTION: THE PLY ORIENTATION OF EACH PLY IS DESIGNATED BY A NUMBER (IN DEGREES) REPRESENTING THE ORIENTATION OF THE AXIS PARALLEL TO THE DIRECTION OF FILAMENTS (IN TAPE) OR LONGITUDINALLY ORIENTED YARN (IN A WOVEN FABRIC) WITH RESPECT TO A REFERENCE AXIS. 0 DEGREES IS THE REFERENCE AXIS. THE DIRECTION OF LONGITUDINAL YARN IN A WOVEN FABRIC IS CALLED THE WARP DIRECTION

[B] MATERIAL AND PLY ORIENTATION ARE ALWAYS SHOWN FOR FIELD AREAS. SEE BOEING DRAWINGS FOR EDGE BANDS AND AREAS WITH DOUBLERS WHENEVER THEY ARE NOT SHOWN IN THE MANUAL AS ADJUNCTS TO FIELD AREAS

[C] PREPREG GRAPHITE TAPE PER BMS 8-212, TYPE II, CLASS 3, GRADE 95 (CLASS 1 OPTIONAL)

[D] PREPREG GRAPHITE FABRIC PER BMS 8-212, TYPE IV, CLASS 2, STYLE 3K-70-PW

[E] PREPREG GLASS FABRIC PER BMS 8-139, TYPE 120

[F] CORE RIBBON DIRECTION - TYPICAL EXCEPT AS SHOWN

[G] WARP DIRECTION OPTIONAL

[H] FOR CUM LINE NUMBERS: 1261 THRU 1585 AND AIRPLANES INCORPORATING SB 51-1011

[I] FOR CUM LINE NUMBERS: 1003, 1012, 1013, 1018 THRU 1058, 1060 THRU 1120, 1186 THRU 1199

[J] FOR AIRPLANES NOT LISTED IN [I]

[K] 350°F (177°C) CURE AT MANUFACTURE

[L] 250°F (121°C) CURE AT MANUFACTURE

[M] PREPREG GRAPHITE TAPE PER BMS 8-212, TYPE III, CLASS 3, GRADE 95 (CLASS 1 OPTIONAL)

Rudder Skin Identification
(Graphite Composite Rudder)
Figure 2 (Sheet 1)

NOTES (CONT)

N FOR CUM LINE NUMBERS:
1003, 1012, 1013, 1018 THRU 1120,
1186 THRU 1199, 1361 THRU 1418

O 65C25879 (DETAIL III) IS OPTIONAL
TO 65C31390 (DETAIL V) FOR CUM
LINE NUMBERS: 1203, 1241 THRU
1347

P FOR CUM LINE NUMBERS:
1420 THRU 1585

Q ITEM 9 OPTIONAL TO ITEM 1 FOR CUM
LINE NUMBER: 1203

R END OF FIBERGLASS PLY FOR CUM LINE
NUMBER 1203 IF PANEL IS ITEM 1

S END OF FIBERGLASS PLY FOR CUM LINE
NUMBER 1203 IF PANEL IS ITEM 9

Rudder Skin Identification
(Graphite Composite Rudder)
Figure 2 (Sheet 2)

REF DWG
65C25961

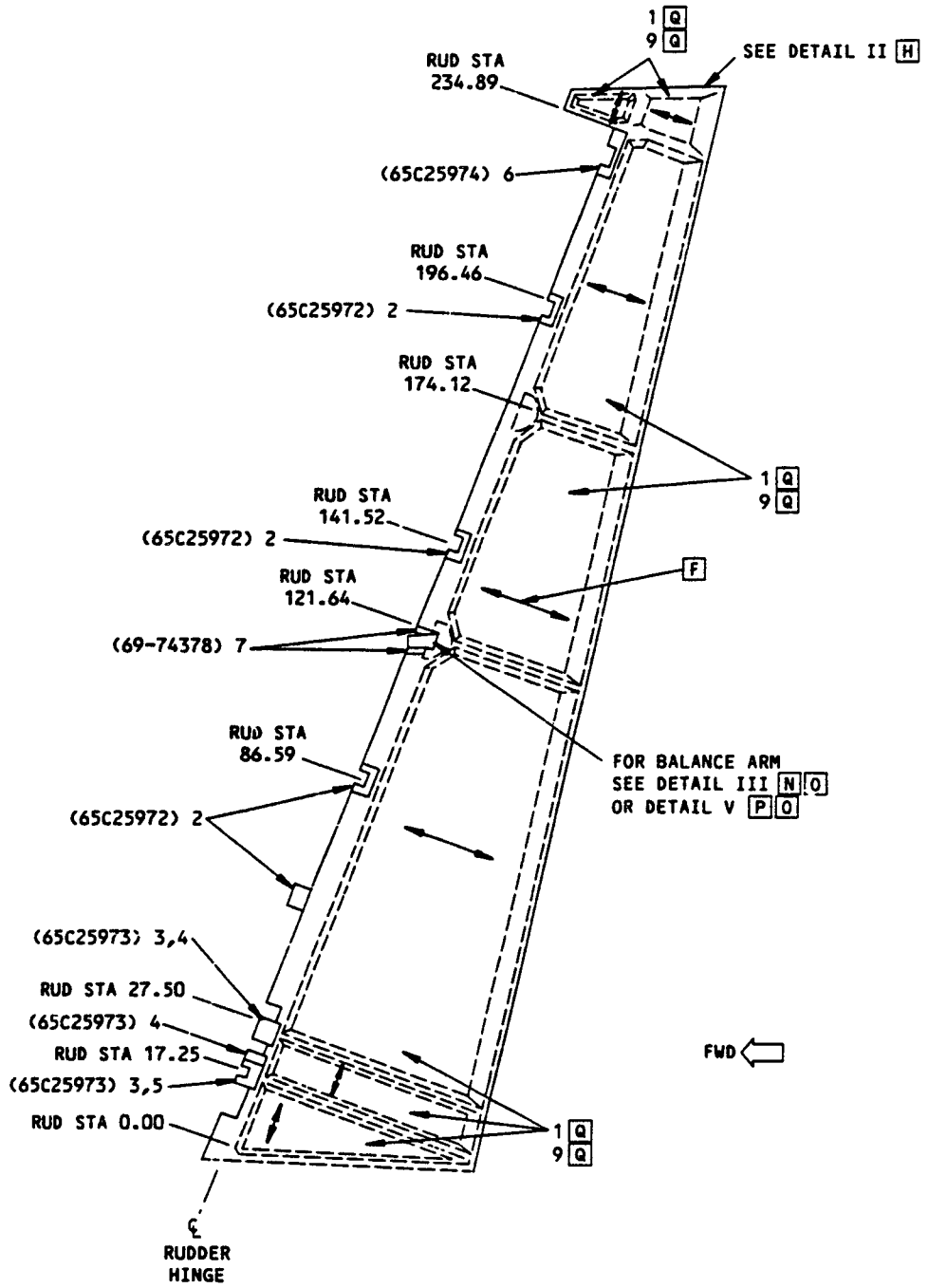


DETAIL I

LIST OF MATL

Rudder Skin Identification (Graphite Composite Rudder)
Figure 2 (Sheet 3)

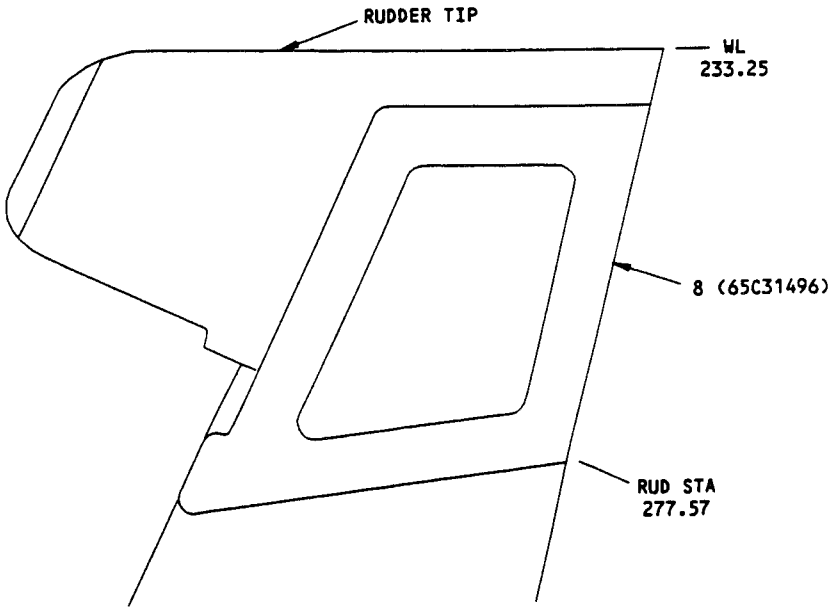


LIGHTNING STRIKE PROTECTION FRAME
DETAIL II

LIST OF MATL

Rudder Skin Identification (Graphite Composite Rudder)
Figure 2 (Sheet 4)

229149

| ITEM | DESCRIPTION | GAGE | MATERIAL | EFFECTIVITY |
|---|---|---|---|---|
| 1 | SKIN PANEL - LH, RH<br>SKIN<br>CORE | | GRAPHITE/EPOXY HONEYCOMB SANDWICH [K]<br>SEE DETAIL IV<br>NON-METALLIC HONEYCOMB PER BMS 8-124, CLASS IV, TYPE V, GRADE 3.0 | [Q] |
| 2 | COVER PLATE | 0.063 | CLAD 7075-T6 | |
| 3 | COVER PANEL ASSY -<br>COVER PANEL<br>FILLER | <br>0.063<br>0.072 | <br>CLAD 2024-T3<br>CLAD 2024-T3 | |
| 4 | COVER PANEL ASSY - UPR<br>COVER PANEL<br>FILLER | <br>0.063<br>0.125 | <br>CLAD 2024-T3<br>CLAD 2024-T3 | |
| 5 | COVER PANEL - UPR | 0.063 | CLAD 2024-T3 | |
| 6 | HINGE COVER - FAIRING<br>SKIN | | GLASS/EPOXY LAMINATE [L]<br>PREPREG GLASS FABRIC PER BMS 8-79, TYPE 120 OR 1581 | |
| 7 | GAP COVER - FAIRING | 0.040 | CLAD 7075-T6 | |
| 8 | CONDUCTIVE FRAME | 0.020 | 6061-T4 | [H] |
| 9 | SKIN PANEL - LH, RH<br>SKIN<br>CORE | | GRAPHITE/EPOXY HONEYCOMB SANDWICH [K]<br>SEE DETAIL IV<br>NON-METALLIC HONEYCOMB PER BMS 8-124, CLASS IV, TYPE V, GRADE 3.0 | [Q] |

LIST OF MATERIALS FOR DETAILS I AND II

Rudder Skin Identification (Graphite Composite Rudder)
Figure 2 (Sheet 5)

332837

REF DWG
65C25879

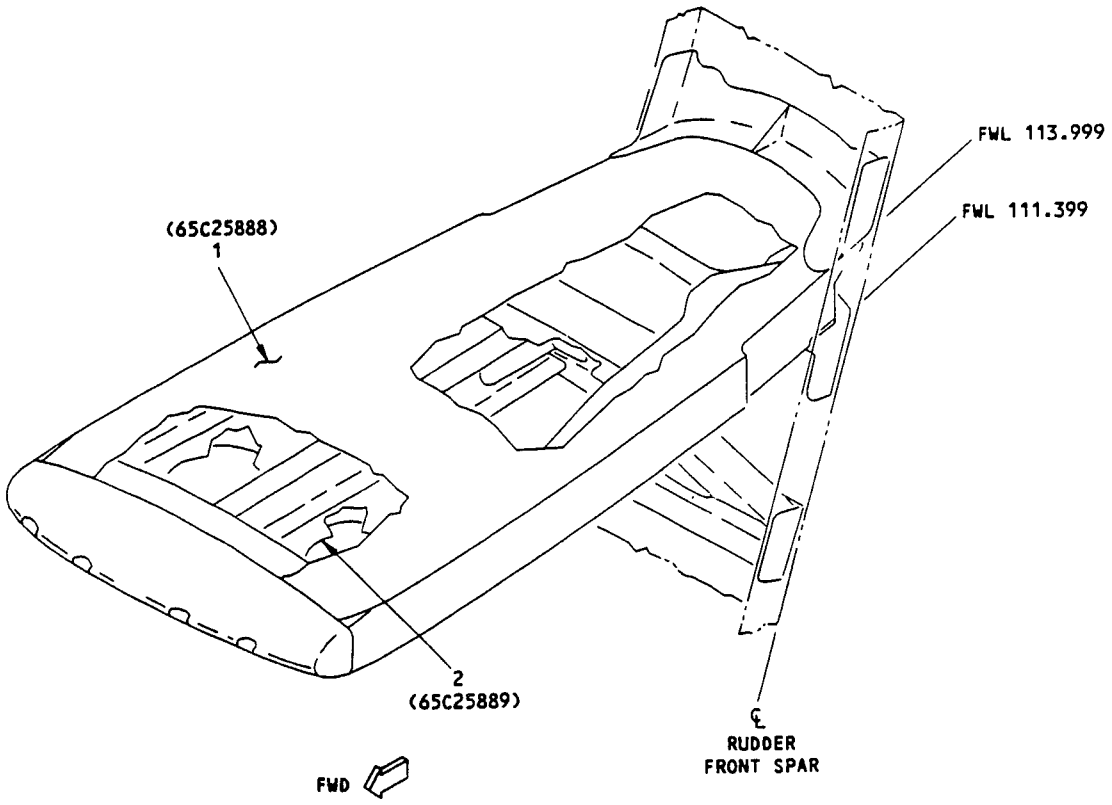


DETAIL III N O

| ITEM | DESCRIPTION | GAGE | MATERIAL | EFFECTIVITY |
|---|---|---|---|---|
| 1 | SKIN PANEL - UPR CHEM-MILLED | 0.063 | CLAD 7075-T6 | |
| 2 | SKIN PANEL - LWR | 0.125 | CLAD 7075-T6 | |

LIST OF MATERIALS FOR DETAIL III N O

Rudder Skin Identification (Graphite Composite Rudder)
Figure 2 (Sheet 6)

114606

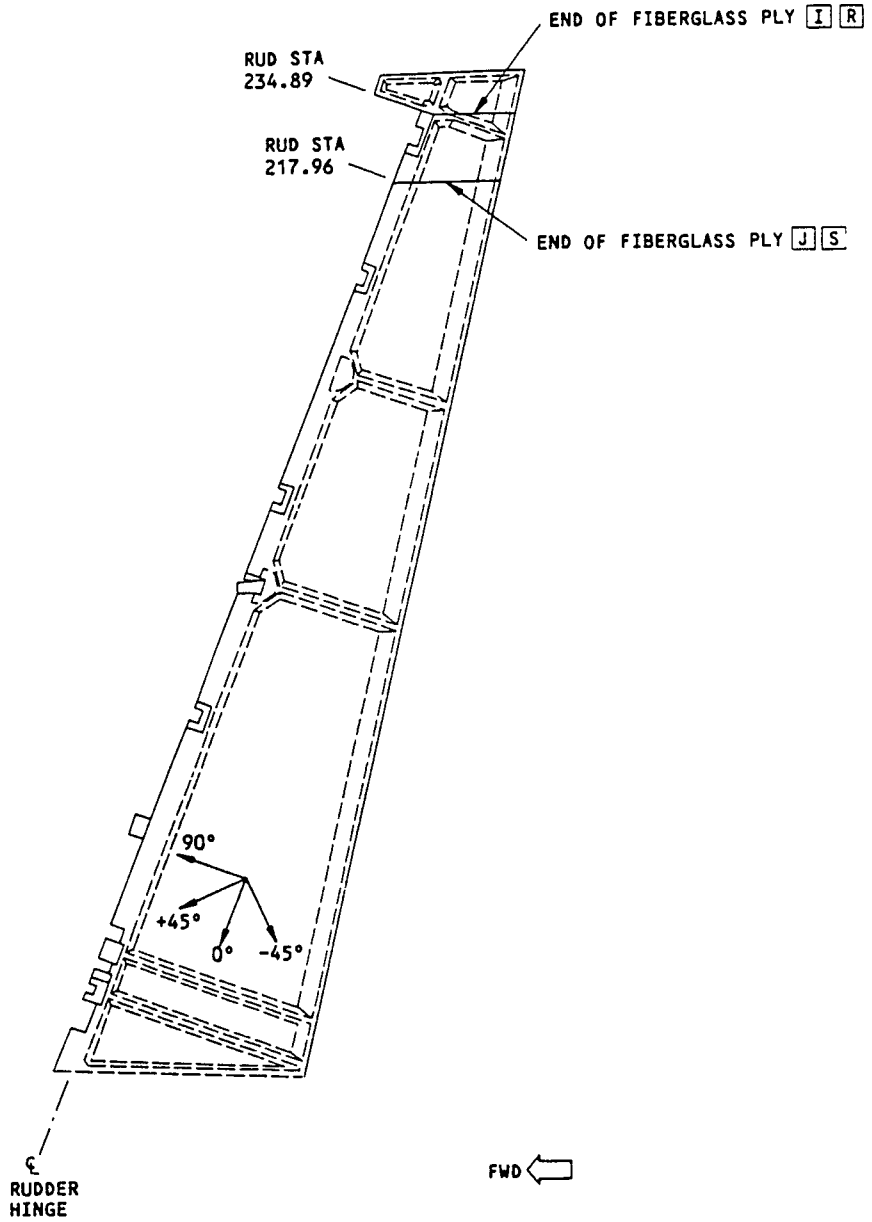


VIEW ON LEFT SIDE OF PANEL A
RIGHT SIDE OPPOSITE

DETAIL IV
(CONTINUED ON NEXT PAGE)

Rudder Skin Identification (Graphite Composite Rudder)
Figure 2 (Sheet 7)

114597

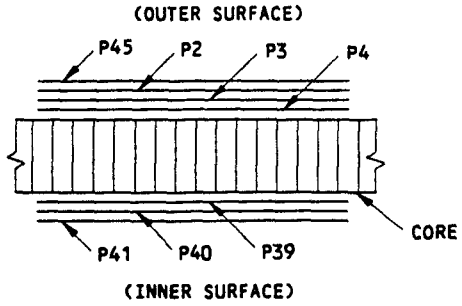


TYPICAL SECTION THRU HONEYCOMB PANEL [B]
ABOVE RUD STA 234.89 [J] OR
ABOVE RUD STA 217.96 [I]

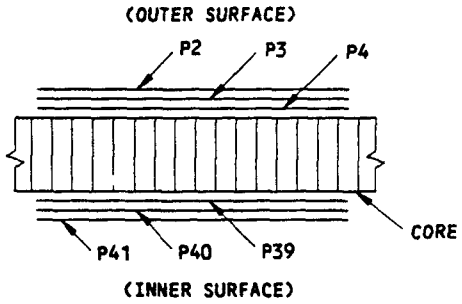


TYPICAL SECTION THRU HONEYCOMB PANEL
AT FIELD AREAS WITH GRAPHITE PLIES ONLY [B]

| ITEM NO. | PLY NO. | MATERIAL | PLY ORIENTATION |
|---|---|---|---|
| 1 [Q] | P2,P41 | [C] | +45° |
| | P3,P40 | [C] | 0° |
| | P4,P39 | [C] | -45° |
| | P45 | [E] | OPTIONAL |
| 9 [Q] | P2,P41 | [M] | +45° |
| | P3,P40 | [M] | 0° |
| | P4,P39 | [M] | -45° |
| | P45 | [E] | OPTIONAL |

PLY TABLE FOR SKIN PANELS [B]

DETAIL IV (CONT)

Rudder Skin Identification (Graphite Composite Rudder)
Figure 2 (Sheet 8)

114607

REF DWG
65C31390

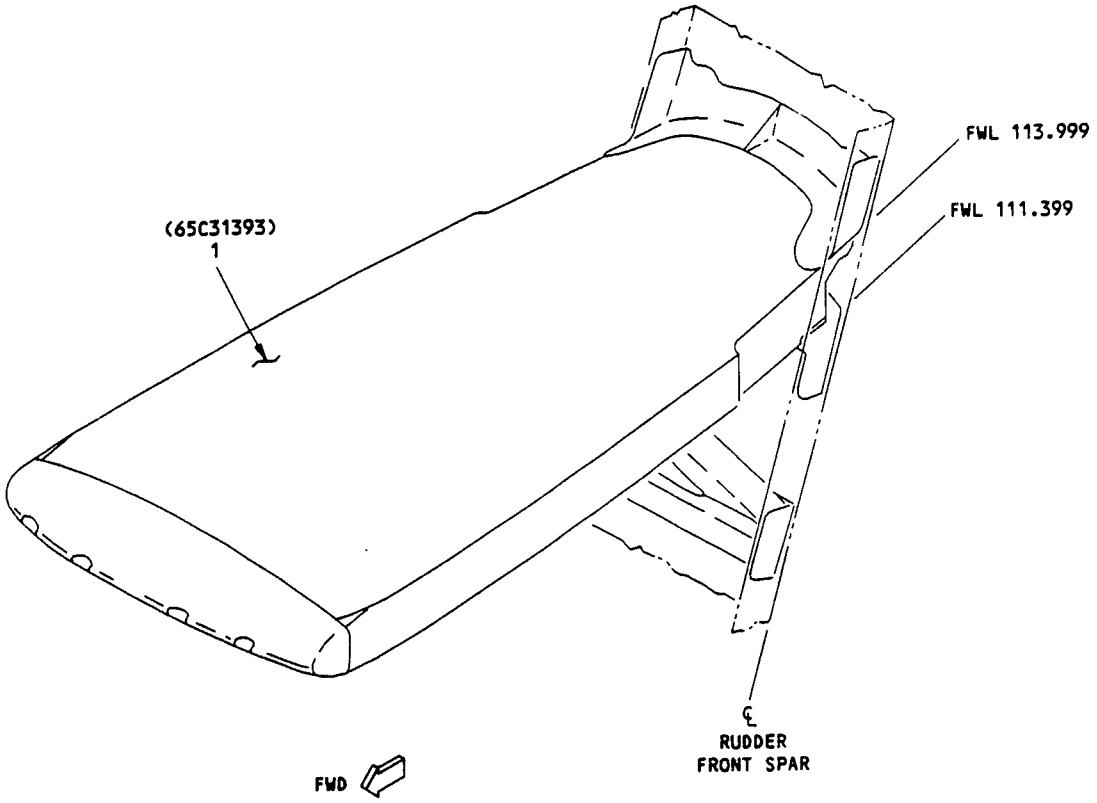


DETAIL V [O] [P]

| ITEM | DESCRIPTION | GAGE | MATERIAL | EFFECTIVITY |
|---|---|---|---|---|
| 1 | SKIN PANEL - UPR CHEM-MILLED | 0.063 | CLAD 7075-T6 | |
| 2 | SKIN PANEL - LWR | 0.125 | CLAD 7075-T6 | |

LIST OF MATERIALS FOR DETAIL V [O] [P]

Rudder Skin Identification (Graphite Composite Rudder)
Figure 2 (Sheet 9)

332838

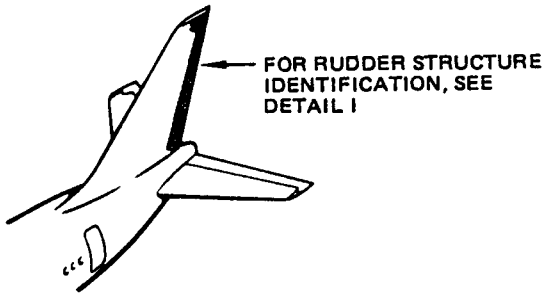


NOTES

- THIS FIGURE APPLIES ONLY TO GRAPHITE COMPOSITE RUDDERS ON 737-200 AIRPLANES WITH CUM LINE NUMBERS: 1003, 1012, 1013, 1018 THRU 1058, 1060 THRU 1120, 1186 THRU 1203, 1241 THRU 1585

A PLY ORIENTATION CONVENTION: THE PLY ORIENTATION OF EACH PLY IS DESIGNATED BY A NUMBER (IN DEGREES) REPRESENTING THE ORIENTATION OF THE AXIS PARALLEL TO THE DIRECTION OF FILAMENTS (IN TAPE) OR LONGITUDINALLY ORIENTED YARN (IN A WOVEN FABRIC) WITH RESPECT TO A REFERENCE AXIS. 0 DEGREES IS THE REFERENCE AXIS. THE DIRECTION OF LONGITUDINAL YARN IN A WOVEN FABRIC IS CALLED THE WARP DIRECTION

B MATERIAL AND PLY ORIENTATION ARE ALWAYS SHOWN FOR FIELD AREAS. SEE BOEING DRAWINGS FOR EDGE BANDS AND AREAS WITH DOUBLERS WHENEVER THEY ARE NOT SHOWN IN THE MANUAL AS ADJUNCTS TO FIELD AREAS

C PREPREG GRAPHITE FABRIC PER BMS 8-256, CLASS II, GRADE 3K-70-PW, TYPE I

D PREPREG GRAPHITE FABRIC PER BMS 8-212, CLASS II, GRADE 3K-70-PW, TYPE IV

E PREPREG GLASS FABRIC PER BMS 8-139, TYPE 120

F CORE RIBBON DIRECTION - TYPICAL EXCEPT AS SHOWN

G 350°F (177°C) CURE AT MANUFACTURE

H FOR CUM LINE NUMBERS: 1003, 1012, 1013, 1018 THRU 1058, 1060 THRU 1120, 1186 THRU 1199, 1361 THRU 1585

I OPTIONAL FOR CUM LINE NUMBERS: 1203, 1241 THRU 1347

J FOR AIRPLANES NOT LISTED IN H

K OPTIONAL FOR CUM LINE NUMBERS: 1361 THRU 1585

Rudder Structure Identification
(Graphite Composite Rudder)
Figure 3 (Sheet 1)

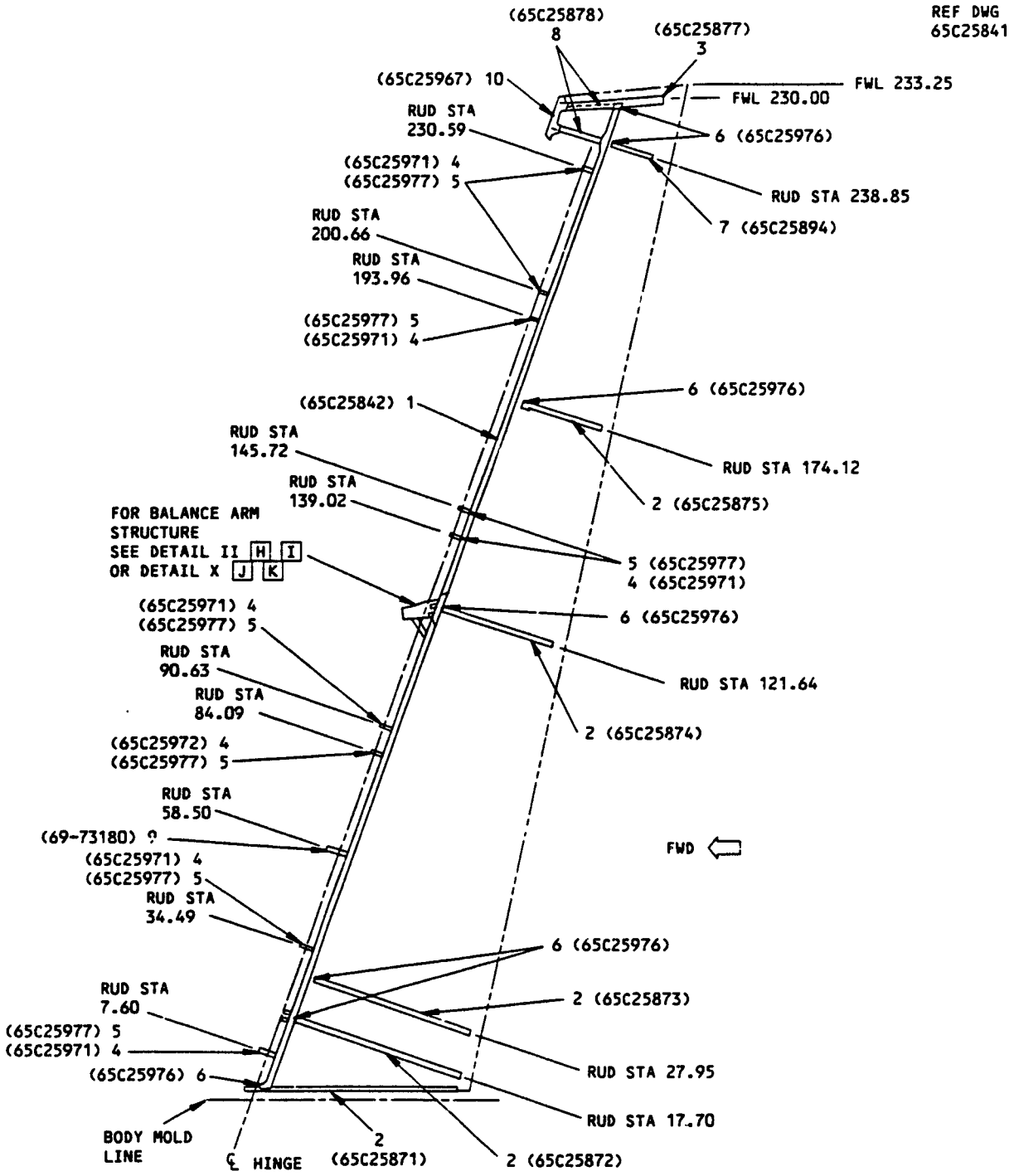


DETAIL I

Rudder Structure Identification (Graphite Composite Rudder)
Figure 3 (Sheet 2)

LIST OF MATI

| ITEM | DESCRIPTION | GAGE | MATERIAL | EFFECTIVITY |
|---|---|---|---|---|
| 1 | SPAR - BOND ASSY | | GRAPHITE/EPOXY HONEYCOMB SANDWICH G | |
| | SKIN | | SEE DETAIL III | |
| | CORE | | NON-METALLIC HONEY-COMB PER BMS 8-124, CLASS IV, TYPE V, GRADE 3.0 | |
| 2 | RIB - BOND ASSY | | GRAPHITE/EPOXY HONEYCOMB SANDWICH G | |
| | SKIN | | SEE DETAIL IV | |
| | CORE | | NON-METALLIC HONEY-COMB PER BMS 8-124, CLASS IV, TYPE V, GRADE 3.0 | |
| 3 | RIB - BOND ASSY | | GRAPHITE/EPOXY HONEYCOMB SANDWICH G | |
| | SKIN | | SEE DETAIL V | |
| | CORE | | NON-METALLIC HONEY-COMB PER BMS 8-124, CLASS IV, TYPE V, GRADE 3.0 | |
| 4 | L E RIBS | 0.040 | CLAD 2024-T42 | |
| 5 | L E RIB SUPPORT ANGLE-BOND ASSY | | GRAPHITE/EPOXY LAMINATE G | |
| | SKIN | | SEE DETAIL VI | |
| 6 | RIB POST - BOND ASSY | | GRAPHITE/EPOXY LAMINATE G | |
| | SKIN | | SEE DETAIL VII | |
| 7 | RIB - AFT, RUDDER TIP BALANCE WEIGHT - BOND ASSY | | GRAPHITE/EPOXY LAMINATE G | |
| | SKIN | | SEE DETAIL VIII | |
| 8 | FAIL-SAFE STRAP, RUDDER TIP WEIGHT - BOND ASSY | | GRAPHITE/EPOXY LAMINATE G | |
| | SKIN | | SEE DETAIL IX | |
| 9 | AIR DAM RIB | 0.032 | CLAD 2024-T42 | |
| 10 | TIP SUPPORT - CLOSURE PAN | 0.063 | CLAD 2024-T42 | |

List of Materials for Detail I

Rudder Structure Identification
(Graphite Composite Rudder)
Figure 3 (Sheet 3)

REF DWG
65C25879

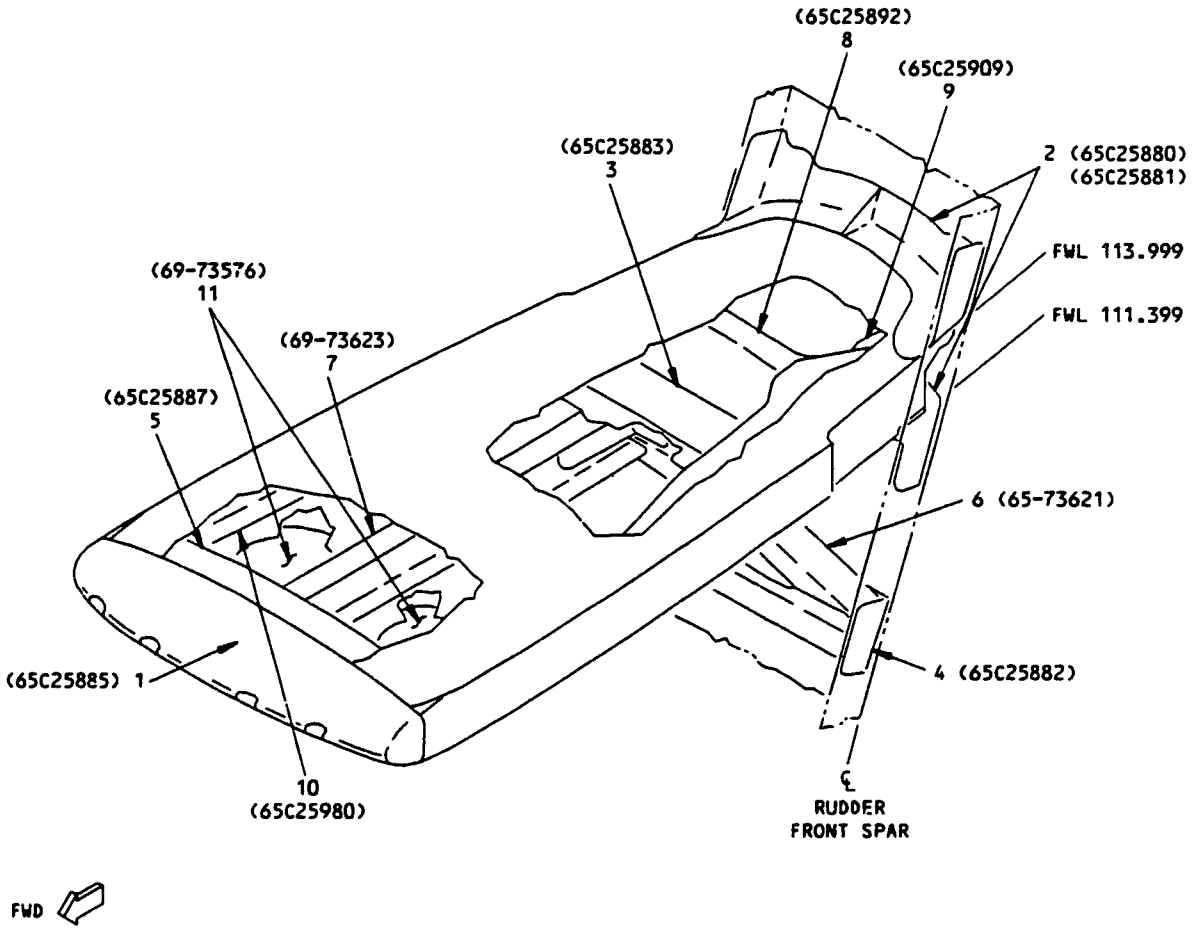


DETAIL II [H] [I]

Rudder Structure Identification (Graphite Composite Rudder)
Figure 3 (Sheet 4)

| ITEM | DESCRIPTION | GAGE | MATERIAL | EFFECTIVITY |
|---|---|---|---|---|
| 1 | TUNGSTEN BALANCE WEIGHT | | TUNGSTEN BASE HIGH DENSITY METAL PER MIL T-21014, TYPE II, CLASS (OPT) | |
| 2 | FITTING - UPR, LWR | | FORGING 7075-T73 | |
| 3 | STRUT SUPPORT RIB | 0.090 | CLAD 7075-T6 | |
| 4 | STRUT SUPPORT | | FORGING 7075-T73 | |
| 5 | CLOSURE RIB | 0.063 | CLAD 7075-T6 | |
| 6 | STRUT - LH, RH | 0.071 | CLAD 7075-T6 | |
| 7 | CENTER CHANNEL | 0.056 | CLAD 7075-T6 | |
| 8 | RIB INTERCOSTAL | 0.050 | CLAD 202A-T42 | |
| 9 | ATTACH FITTING - LH, RH | 2.0 | FORGED BLOCK 7075-T73 | |
| 10 | SIDE CHANNEL - | 0.071 | CLAD 7075-T6 | |
| 11 | ACCESS COVER | 0.016 | CLAD 7075-T6 | |

List of Materials for Detail II H I

Rudder Structure Identification
(Graphite Composite Rudder)
Figure 3 (Sheet 5)

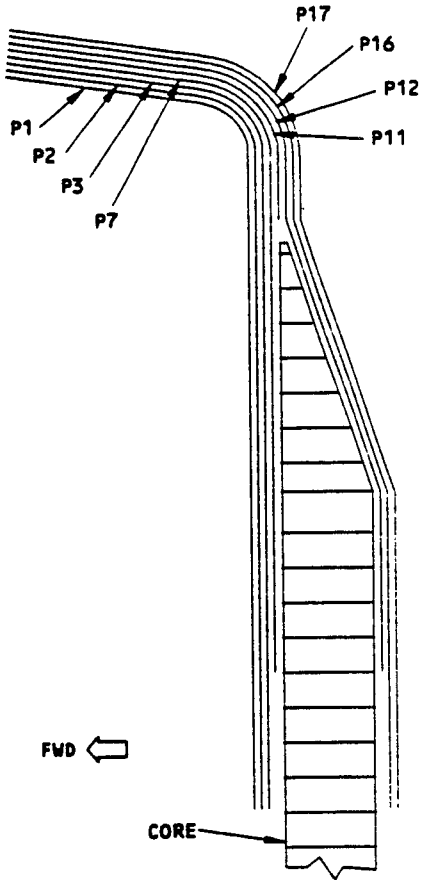


TYPICAL SECTION THRU
EDGE OF HONEYCOMB PANEL

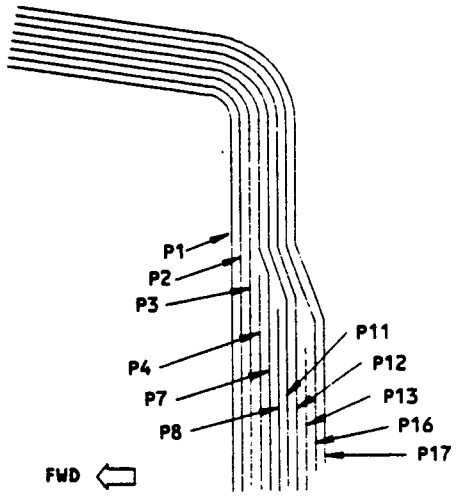


TYPICAL SECTION THRU EDGE OF
LAMINATED PANEL WITH DOUBLERS

NOTE: SEE END OF DETAIL FOR PLY TABLE

SECTIONS THRU SPAR
DETAIL III
(DETAIL CONT ON NEXT PAGE)

Rudder Structure Identification (Graphite Composite Rudder)
Figure 3 (Sheet 6)

114782

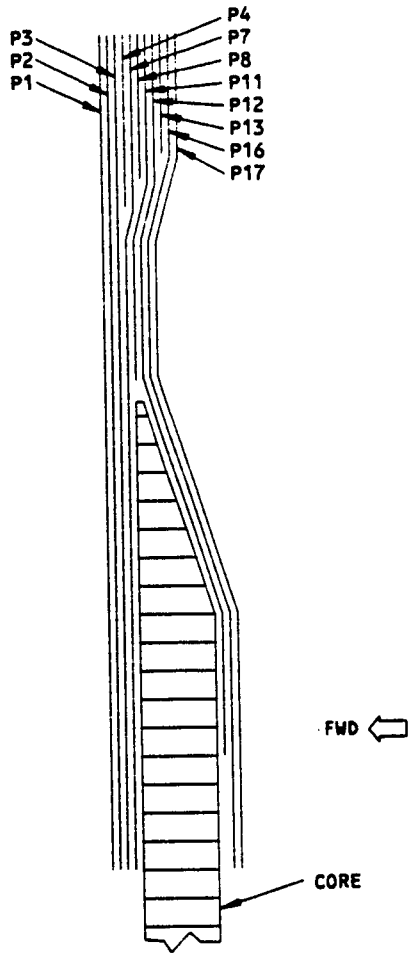


TYPICAL SECTION BETWEEN HONEYCOMB AND LAMINATED PANEL

NOTE: SEE END OF DETAIL FOR PLY TABLE

SECTIONS THRU SPAR
DETAIL III (CONT)
(DETAIL CONT ON NEXT PAGE)

Rudder Structure Identification (Graphite Composite Rudder)
Figure 3 (Sheet 7)

114612

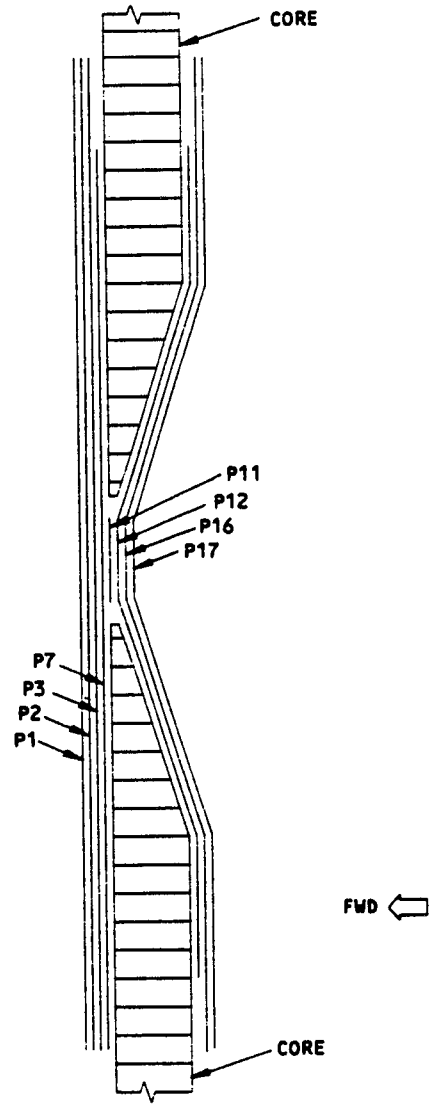


TYPICAL SECTION BETWEEN HONEYCOMB PANELS

NOTE: SEE END OF DETAIL FOR PLY TABLE

SECTIONS THRU SPAR
DETAIL III (CONT)
(DETAIL CONT ON NEXT PAGE)

Rudder Structure Identification (Graphite Composite Rudder)
Figure 3 (Sheet 8)

114611

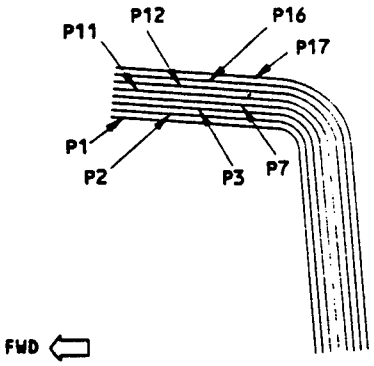


TYPICAL SECTION THRU EDGE OF LAMINATED PANEL

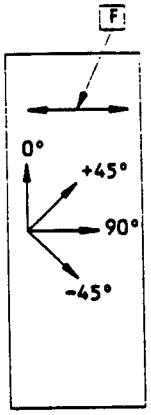


VIEW LOOKING FWD ON SPAR PANEL A

| ITEM NO. | PLY NO. | MATERIAL | PLY ORIENTATION |
|---|---|---|---|
| 1 | P1 | E | OPTIONAL |
| | P2,P4, P5,P6, P7,P12, P13,P14, P15,P17 | C | ±45° |
| | P3,P8, P9,P10 P11,P16 | C | 0° OR 90° |

PLY TABLE FOR SPAR B

SECTIONS THRU SPAR
DETAIL III (CONT)

Rudder Structure Identification (Graphite Composite Rudder)
Figure 3 (Sheet 9)

114599

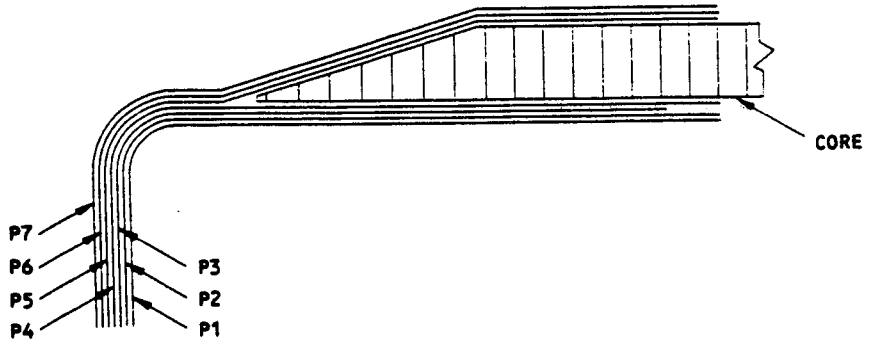


TYPICAL SECTION THRU EDGE OF HONEYCOMB RIB

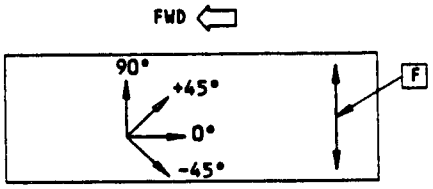


VIEW ON RIB PANELS [A]

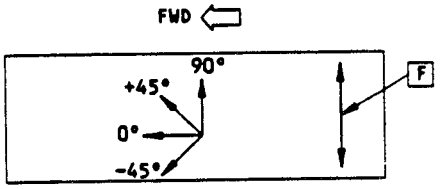


VIEW ON LWR CLOSURE RIB PANEL [A]

| ITEM NO. | PLY NO. | MATERIAL | PLY ORIENTATION |
|---|---|---|---|
| 2 | P1,P3, P5,P7 | [C] | ±45° |
| | P2, P4, P6 | [C] | 0° OR 90° |

PLY TABLE FOR RIBS [B]

DETAIL IV

Rudder Structure Identification (Graphite Composite Rudder)
Figure 3 (Sheet 10)

114783

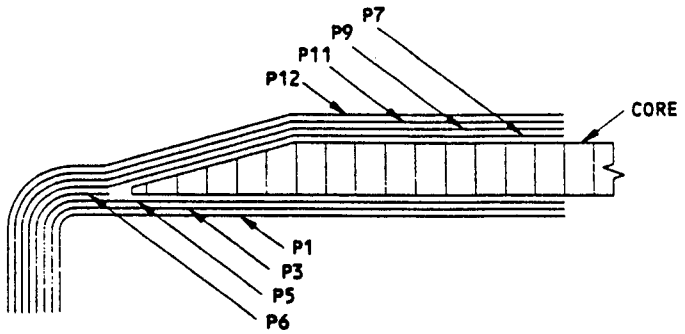


TYPICAL SECTION THRU EDGE OF HONEYCOMB RIB

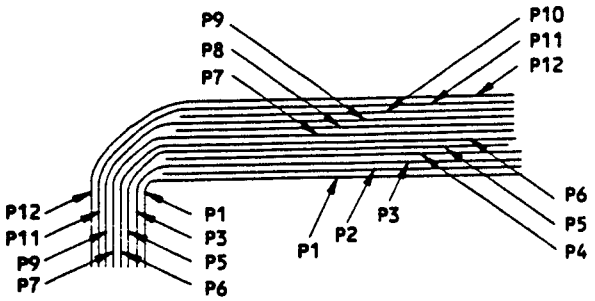


TYPICAL SECTION THRU LAMINATED RIB
WITH DOUBLERS

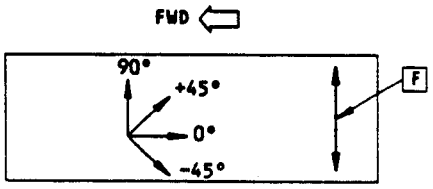


VIEW ON RIB PANEL A

| ITEM NO. | PLY NO. | MATERIAL | PLY ORIENTATION |
|---|---|---|---|
| 3 | P2,P3, P4,P6, P8,P9, P10 | C | ±45° |
| | P1,P5, P7,P11, | C | 0° OR 90° |
| | P12 | E | OPTIONAL |

PLY TABLE FOR RIBS B

DETAIL V

Rudder Structure Identification (Graphite Composite Rudder)
Figure 3 (Sheet 11)

114600

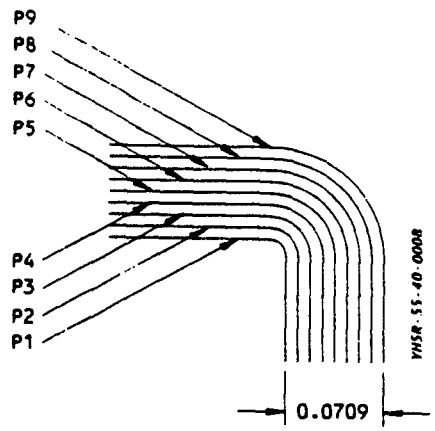


TYPICAL SECTION THRU LAMINATED SUPPORT ANGLE

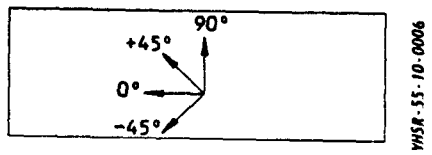


VIEW ON SUPPORT ANGLE [A]

| ITEM NO. | PLY NO. | MATERIAL | PLY ORIENTATION |
|---|---|---|---|
| 5 | P1 | [E] | OPTIONAL |
| | P2,P4, P7,P9 | [D] | 0° OR 90° |
| | P3,P5, P6,P8 | [D] | ±45° |

PLY TABLE FOR SUPPORT ANGLE [B]

DETAIL VI

Rudder Structure Identification (Graphite Composite Rudder)
Figure 3 (Sheet 12)

114613

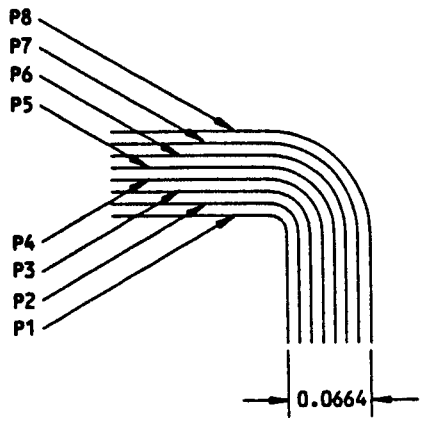


TYPICAL SECTION THRU LAMINATED RIB POST

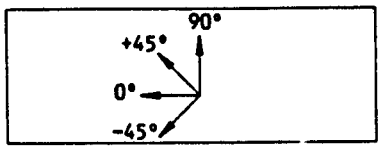


VIEW ON RIB POST

| ITEM NO. | PLY NO. | MATERIAL | PLY ORIENTATION |
|---|---|---|---|
| 6 | P1,P3, P6,P8 | D | 0° OR 90° |
| | P2,P4, P5,P7 | D | ±45° |

PLY TABLE FOR RIB POST

DETAIL VII

Rudder Structure Identification (Graphite Composite Rudder)
Figure 3 (Sheet 13)

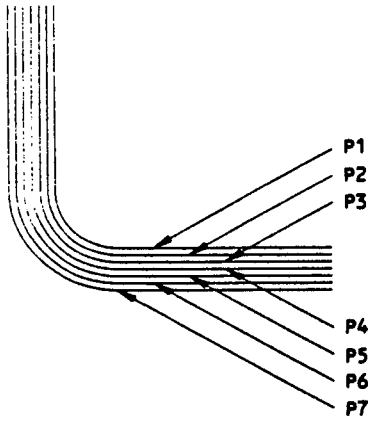


TYPICAL SECTION THRU EDGE OF
LAMINATED RIB

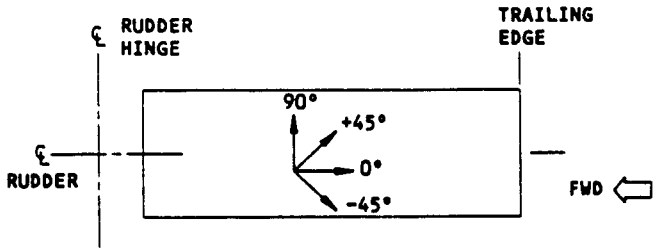


VIEW ON RIB

| ITEM NO. | PLY NO. | MATERIAL | PLY ORIENTATION |
|---|---|---|---|
| 7 | P1,P3, P5,P7 | D | ±45° |
| | P2,P4, P6 | D | 0° OR 90° |

PLY TABLE FOR RIB

DETAIL VIII

Rudder Structure Identification (Graphite Composite Rudder)
Figure 3 (Sheet 14)

114614

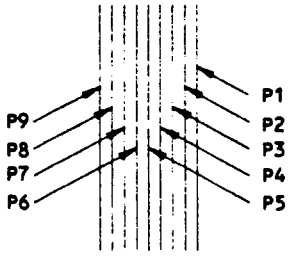


TYPICAL SECTION THRU LWR
FAIL-SAFE STRAP
RUD STA 237.93

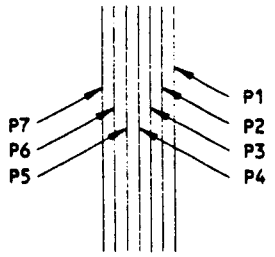


TYPICAL SECTION THRU UPR
FAIL-SAFE STRAP
FIN WL 230.00

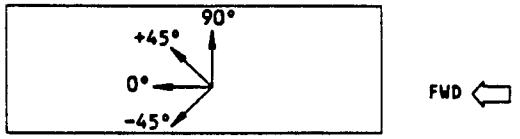


VIEW ON STRAPS

| ITEM NO. | PLY NO. | MATERIAL | PLY ORIENTATION |
|---|---|---|---|
| 8 | P1,P3, P5,P7 | D | 0° OR 90° |
| | P9 (LWR STRAP ONLY) | D | 0° OR 90° |
| | P2,P4 P6 | D | ±45° |
| | P8 (LWR STRAP ONLY) | D | ±45° |

DETAIL IX

Rudder Structure Identification (Graphite Composite Rudder)
Figure 3 (Sheet 15)

114602

REF DWG
65C31390

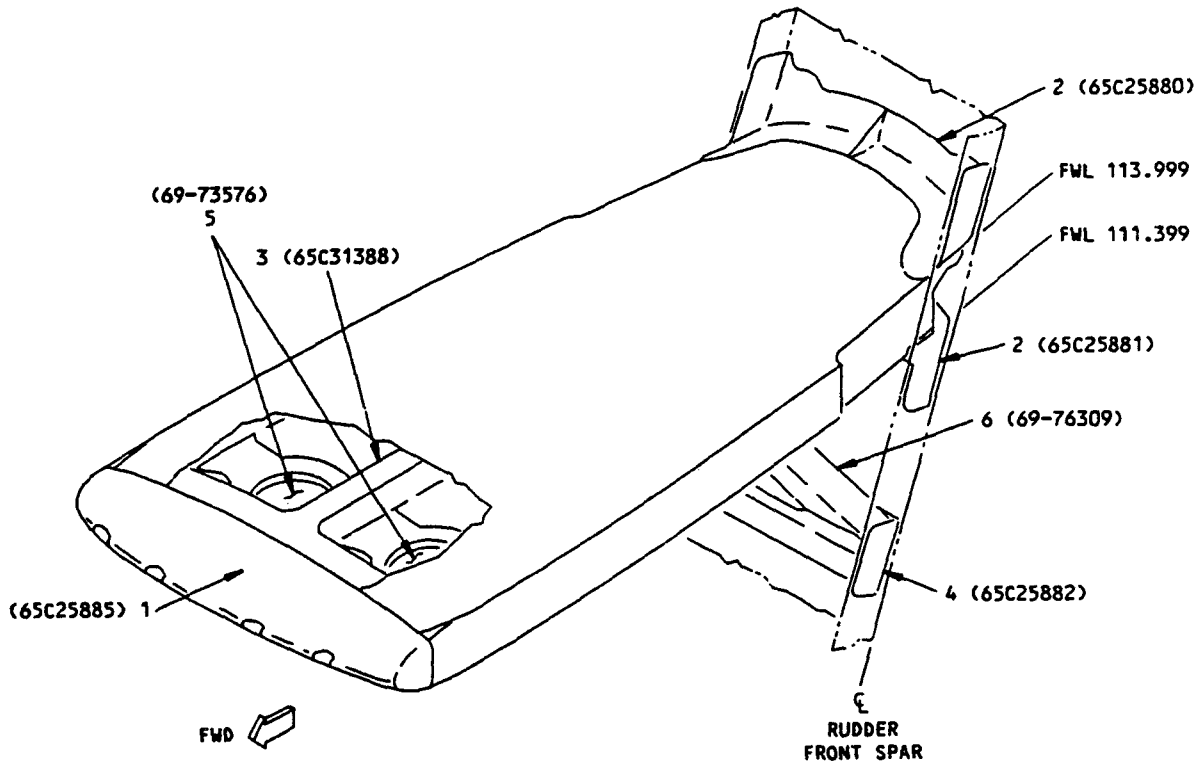


DETAIL X [J] [K]

| ITEM | DESCRIPTION | GAGE | MATERIAL | EFFECTIVITY |
|---|---|---|---|---|
| 1 | TUNGSTEN BALANCE WEIGHT | | TUNGSTEN BASE HIGH DENSITY METAL PER MIL-T-21014, TYPE II, CLASS (OPT) | |
| 2 | FITTING - UPR, LWR | | DIE FORGING 7075-T73 | |
| 3 | FITTING | | A356-T6 INVESTMENT CASTING | |
| 4 | STRUT SUPPORT | | FORGING 7075-T73 | |
| 5 | ACCESS COVER | 0.016 | CLAD 7075-T6 | |
| 6 | STRUT - LH, RH | 0.071 | CLAD 7075-T73 | |

LIST OF MATERIALS FOR DETAIL X

Rudder Structure Identification (Graphite Composite Rudder)
Figure 3 (Sheet 16)

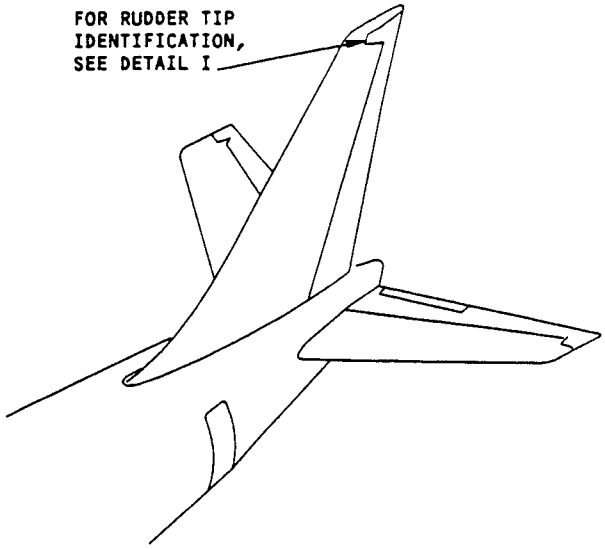


NOTES

- THIS FIGURE APPLIES TO RUDDER TIP ON GRAPHITE COMPOSITE RUDDER DELIVERED ON 737-200 AIRPLANES, CUM LINE NUMBERS: 1003,1012,1013,1018 THRU 1058,1060 THRU 1203,1241 THRU 1585

[A] PLY ORIENTATION CONVENTION: THE PLY ORIENTATION OF EACH PLY IS DESIGNATED BY A NUMBER (IN DEGREES) REPRESENTING THE ORIENTATION OF THE AXIS PARALLEL TO THE DIRECTION OF FILAMENTS (IN TAPE) OR LONGITUDINALLY ORIENTED YARN (IN A WOVEN FABRIC) WITH RESPECT TO A REFERENCE AXIS. 0 DEGREES IS THE REFERENCE AXIS. THE DIRECTION OF LONGITUDINAL YARN IN A WOVEN FABRIC IS CALLED THE WARP DIRECTION

[B] MATERIAL AND PLY ORIENTATION ARE ALWAYS SHOWN FOR FIELD AREAS. SEE BOEING DRAWINGS FOR EDGE BANDS AND AREAS WITH DOUBLERS WHENEVER THEY ARE NOT SHOWN IN THE MANUAL AS ADJUNCTS TO FIELD AREAS

[C] PREPREG GLASS FABRIC PER BMS 8-219, STYLE 285

[D] PREPREG GLASS FABRIC PER BMS 8-79, TYPE 120, CLASS III, GRADE 1

[E] FLAME SPRAY AREA - SEE BOEING DRAWINGS FOR COATING THICKNESS

[F] 250°F (121°C) CURE AT MANUFACTURE

[G] PREPREG GLASS FABRIC PER BMS 8-79, TYPE 1581 OR 7781, CLASS III, GRADE 1

[H] ITEM 3 OPTIONAL TO ITEM 1 FOR CUM LINE NUMBERS: 1186 AND ON

[I] FOR CUM LINE NUMBERS: 1186 THRU 1257

[J] FOR AIRPLANES NOT LISTED IN [I]

[K] OPTIONAL FOR CUM LINE NUMBERS: 1261 THRU 1329

Rudder Tip Identification (Graphite Composite Rudder)
Figure 4 (Sheet 1)

332850

REF DWG
65C25841

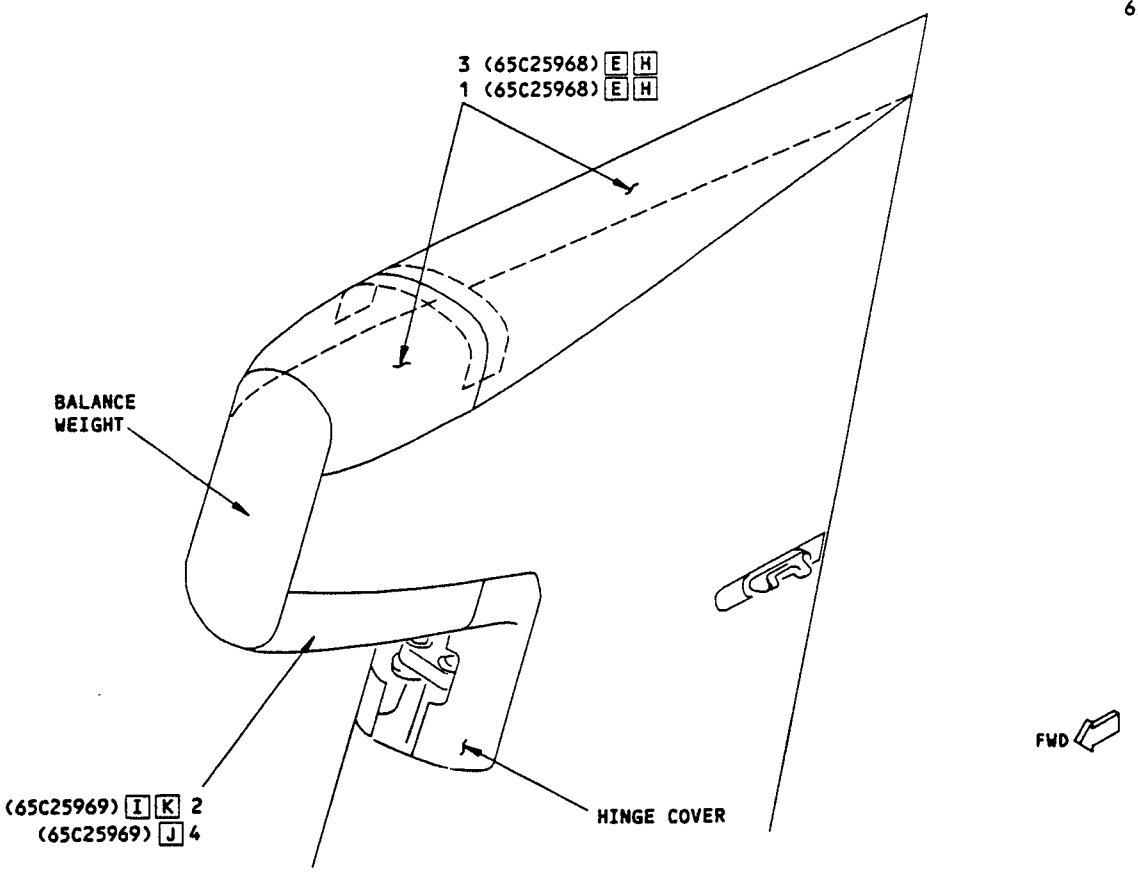


DETAIL I

| ITEM | DESCRIPTION | GAGE | MATERIAL | EFFECTIVITY |
|---|---|---|---|---|
| 1 | FAIRING - UPR<br>SKIN - FWD, AFT<br>SPLICE PLATE | <br><br>0.050 | GLASS/ARAMID/EPOXY LAMINATE F<br>SEE DETAIL II<br>CLAD 2024-T42 | H |
| 2 | FAIRING - LWR<br>SKIN<br>END CLOSURE - SKIN, AFT | | GLASS/ARAMID/EPOXY LAMINATE F<br>SEE DETAIL II<br>SEE DETAIL II | I K |
| 3 | FAIRING - UPR<br>SKIN - FWD, AFT<br>SPLICE PLATE | <br><br>0.050 | GLASS/EPOXY LAMINATE F<br>SEE DETAIL III<br>CLAD 2024-T42 | H |
| 4 | FAIRING - LWR<br>SKIN<br>END CLOSURE - SKIN, AFT | | GLASS/EPOXY LAMINATE F<br>SEE DETAIL III<br>SEE DETAIL III | J |

LIST OF MATERIALS FOR DETAIL I

Rudder Tip Identification (Graphite Composite Rudder)
Figure 4 (Sheet 2)

114615

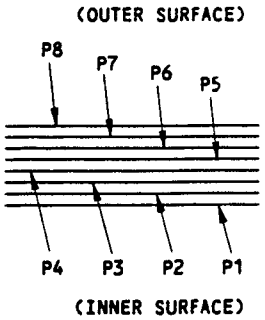


SECTION THRU UPR
AND LWR FAIRING SKIN

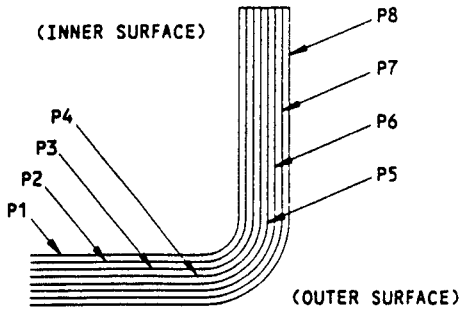


SECTION THRU AFT END
CLOSURE ANGLE - LOWER FAIRING

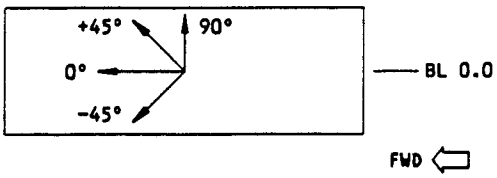


VIEW ON LWR FAIRING
OUTER SURFACE [A]

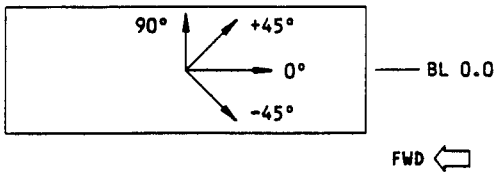


VIEW ON UPR FAIRING
OUTER SURFACE [A]

| ITEM NO. | PLY NO. | MATERIAL | PLY ORIENTATION |
|---|---|---|---|
| 1 [H]<br>2 [I] [K] | P1,P8 | [D] | ±45° |
| | P2,P7 | [C] | 0° OR 90° |
| | P3,P4,<br>P5,P6 | [C] | ±45° |

PLY TABLE FOR RUDDER TIP [B]

DETAIL II

Rudder Tip Identification (Graphite Composite Rudder)
Figure 4 (Sheet 3)

114604

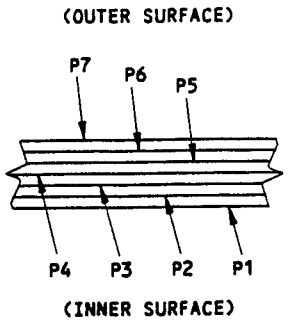


SECTION THRU UPR
AND LWR FAIRING SKIN

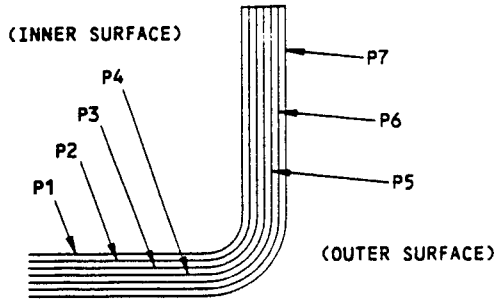


SECTION THRU AFT END
CLOSURE ANGLE - LOWER FAIRING

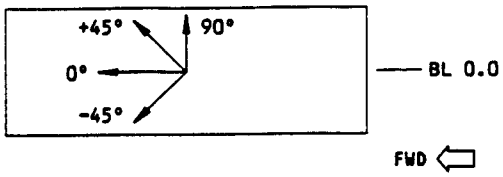


VIEW ON LWR FAIRING
OUTER SURFACE [A]

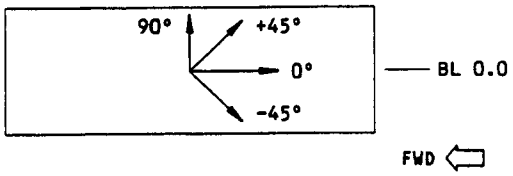


VIEW ON UPR FAIRING
OUTER SURFACE [A]

| ITEM NO. | PLY NO. | MATERIAL | PLY ORIENTATION |
|---|---|---|---|
| 3 [H] 4 [J] | P1,P3, P4,P5,P7 | [G] | ±45° |
| | P2,P6 | [G] | 0° OR 90° |

PLY TABLE FOR RUDDER TIP [B]

DETAIL III

Rudder Tip Identification (Graphite Composite Rudder)
Figure 4 (Sheet 4)

332847

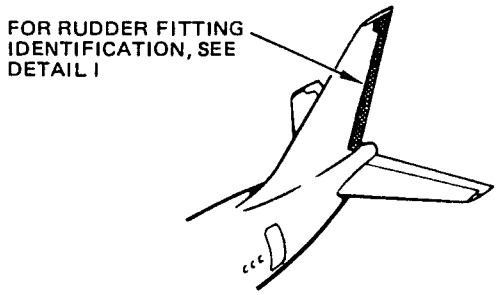


NOTE

- THIS FIGURE APPLIES TO RUDDER FITTINGS ON GRAPHITE COMPOSITE RUDDER DELIVERED ON 737-200 AIRPLANES, CUM LINE NUMBERS: 1003, 1012, 1013, 1018 THRU 1058, 1060 THRU 1120, 1186, 1189, 1194, 1197, 1199, 1203, 1241, 1245, 1256, 1257, 1261, 1262, 1265, 1266, 1267, 1299, 1313, 1319, 1329, 1342, 1347, 1361, 1369, 1371, 1379, 1387, 1392, 1397, 1399, 1401, 1403, 1405, 1414, 1415, 1418, 1420, 1422, 1424, 1426, 1453, 1486

Rudder Fitting Identification
(Graphite Composite Rudder)
Figure 5 (Sheet 1)

REF DWG
65C25842

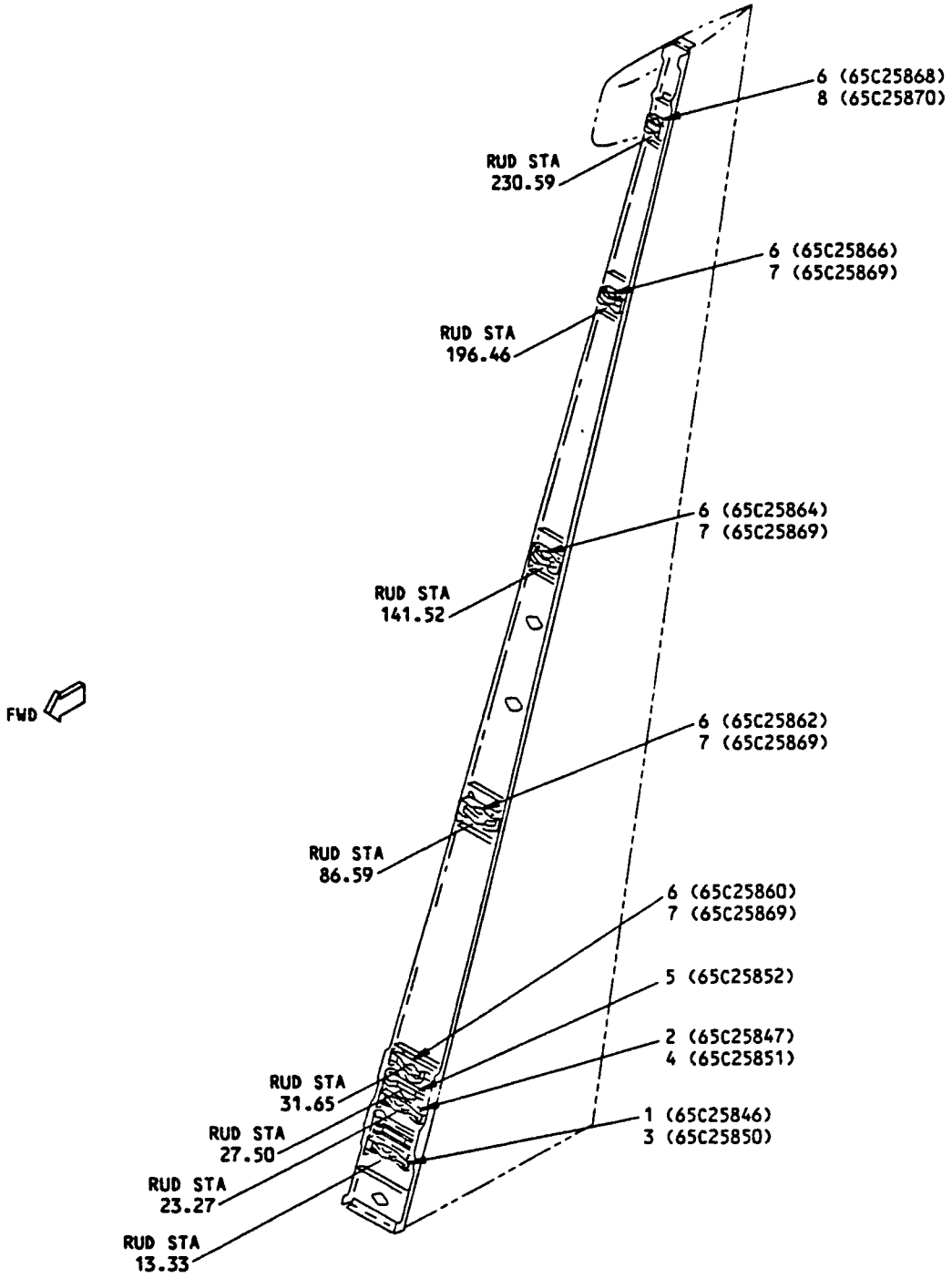


DETAIL I

Rudder Fitting Identification (Graphite Composite Rudder)
Figure 5 (Sheet 2)

114616

| ITEM | DESCRIPTION | GAGE | MATERIAL | EFFECTIVITY |
|---|---|---|---|---|
| 1 | HINGE AND ACTUATOR FITTING - MAIN THRUST | | FORGING 7075-T73 | |
| 2 | HINGE FITTING - AUXILIARY THRUST | | FORGING 7075-T73 | |
| 3 | HINGE BEARING BAR - MAIN THRUST | | FORGING 7075-T73 | |
| 4 | HINGE BEARING BAR - AUXILIARY THRUST | | FORGING 7075-T73 | |
| 5 | SUPPORT FITTING - AUXILIARY ACTUATOR | | FORGING 7075-T73 | |
| 6 | FLOATING HINGE FITTING | | FORGING 7075-T73 | |
| 7 | RUDDER HINGE BEARING BAR - NO. 3-6 | | FORGING 7075-T73 | |
| 8 | RUDDER HINGE BEARING BAR - NO. 7 | | FORGING 7075-T73 | |

LIST OF MATERIALS FOR DETAIL I

Rudder Fitting Identification
(Graphite Composite Rudder)
Figure 5 (Sheet 3)

## REPAIR INSTRUCTIONS

1. Drill out the fasteners and remove the rudder skin panels as necessary to gain access to the damaged rib.
2. Do rework or remove the damage. Use one of the procedures (a) thru (c) below. Then continue to do steps 3 thru 14.
   (a) If damage is only to the flanges, cut out the damaged area of the chord flange as necessary.
   (b) If there is only crack damage, drill 0.25 inch stop holes at the ends of all the cracks that do not end in a fastener hole.
   (c) If (a) or (b) can not be used, cut out the damaged chord and replace it with a filler section as shown.
3. If the spar web is damaged, install a bonded and riveted repair as given in SRM 55-10-4, Fig. 2.
4. Remove the web stiffeners and fasteners as necessary to install the repair parts on the web.
5. Make the repair parts.
6. Drill the fastener holes in the repair parts to match the initial fastener holes in the spar chord.
7. Remove the nicks, scratches, burrs, and sharp edges from the repair parts and the trimmed initial parts.
8. Apply a chemical conversion coating to the repair parts and the cut or trimmed edges of the initial parts as given in SRM 51-10-2.
9. Apply two layers of BMS 10-11, Type I primer to the repair parts and to the bare surfaces of the initial parts. Refer to SOPM 20-41-02.
10. Install the repair parts and all the fasteners.
11. Apply the interior finish as given in AMM 51-21-0.
12. Install all the removed skin panels again. Use the same size and type fasteners as the initial manufacture.
13. Apply the exterior finish as given in AMM 51-21-0.
14. Balance the rudder again as given in SRM 51-80.

## NOTES

- THIS REPAIR WILL NOT HAVE AN EFFECT ON A STRUCTURALLY SIGNIFICANT ITEM (SSI) GIVEN IN SRM 51-00-4, FIG. 3. THUS, NO CHANGE TO THE SUPPLEMENTAL STRUCTURAL INSPECTION DOCUMENT (SSID) INSPECTION PROGRAM IS NECESSARY.
- WHEN YOU DO THIS REPAIR, REFER TO:
  - SRM 51-10-1 FOR INVESTIGATION AND CLEANUP OF DAMAGE
  - SRM 51-10-2 FOR PROTECTIVE TREATMENT OF METAL
  - SRM 51-30 FOR FASTENER CODE, REMOVAL AND INSTALLATION, HOLE SIZES AND EDGE MARGINS
  - SRM 55-10-4, FIG. 2 - HORIZONTAL STABILIZER RIB WEB REPAIR.

[A] AS NECESSARY

[B] TRIM OR CUT OUT A MINIMUM PORTION OF THE FLANGE AS NECESSARY TO REMOVE ALL DAMAGE

## FASTENER SYMBOLS

+ INITIAL FASTENER LOCATIONS

✦ REPAIR FASTENER LOCATIONS

Rudder Rib Chord Repair
Figure 1 (Sheet 1)


BOEING PROPRIETARY - Copyright © - Unpublished Work - See title page for details.

| REPAIR MATERIAL | | | | | | | |
|---|---|---|---|---|---|---|---|
| RUDDER STATION | | 86.59, 141.52, 196.56, 233.69, 237.64 | | 13.33, 31.65, 49.27, 60.15, 113.58, 121.64, 167.56, 174.12, 214.71 | | 23.27 | |
| PART | | QTY | MATERIAL | QTY | MATERIAL | QTY | MATERIAL |
| 1 | PLATE | 2 | .050 CLAD 2024-T4 | 2 | .056 CLAD 2024-T4 | 2 | .070 CLAD 2024-T4 |
| 2 | ANGLE | 2 | .050 CLAD 2024-0 HT-T4 | 2 | .056 CLAD 2024-0 HT-T4 | 2 | .070 CLAD 2024-T4 |
| 3 | FILLER | 1 | .050 CLAD 2024-T4 | 1 | .056 CLAD 2024-T4 | 1 | .070 CLAD 2024-T4 |
| 4 | FILLER | 1 | .050 CLAD 2024-T4 | 1 | .056 CLAD 2024-T4 | 1 | .070 CLAD 2024-T4 |
| 5 | FILLER | | .050 CLAD 2024-T4 | | .056 CLAD 2024-T4 | | .070 CLAD 2024-T4 |
| ROW A | RIVET | 4 | BACR15CE-5D | 6 | BACR15CE-5D | 6 | BACR15CE-6D |
| ROW B | RIVET | 4 | MS20470D-5 | 5 | MS20470D-5 | 5 | BACR15CE-6D |
| ROW C | RIVET | 4 | BACR15CE-5D | 6 | BACR15CE-5D | 6 | BACR15CE-6D |



Rudder Rib Chord Repair
Figure 1 (Sheet 2 of 3)

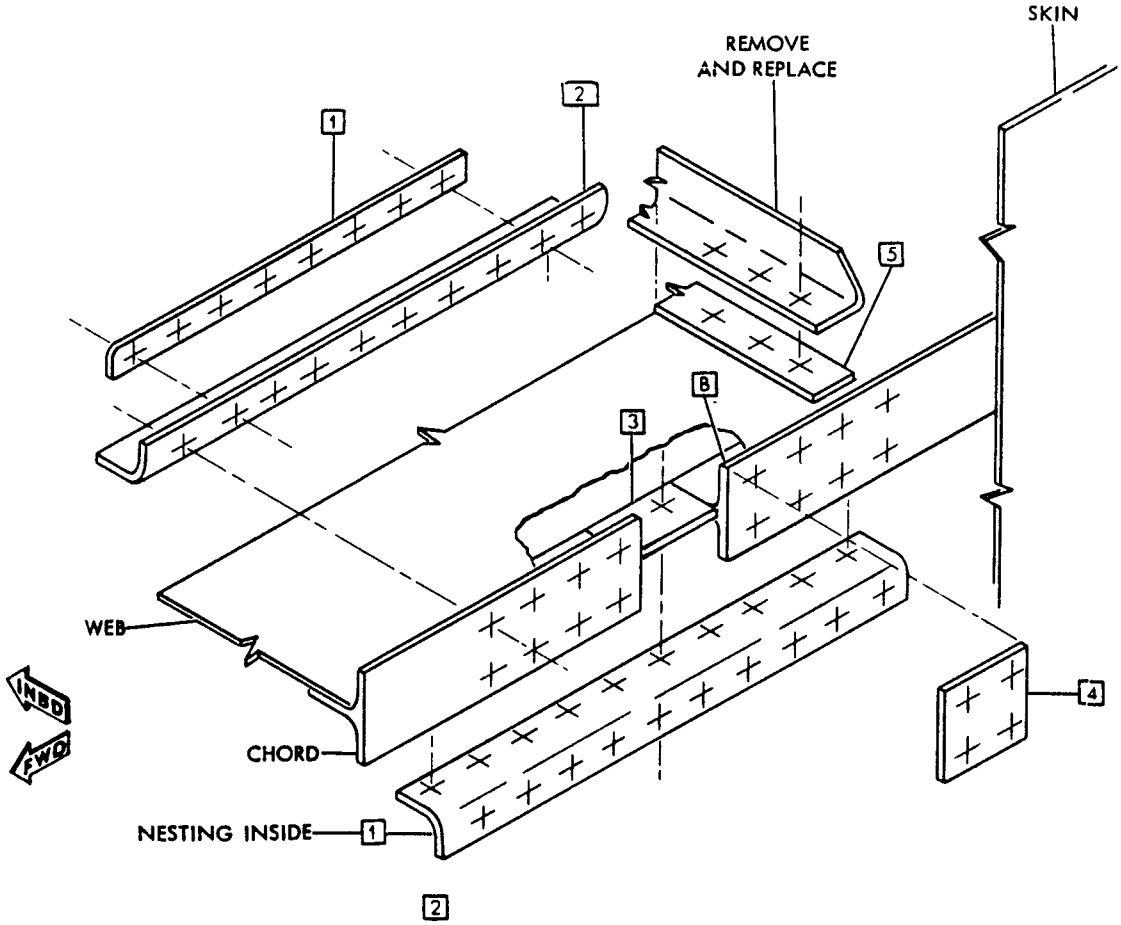


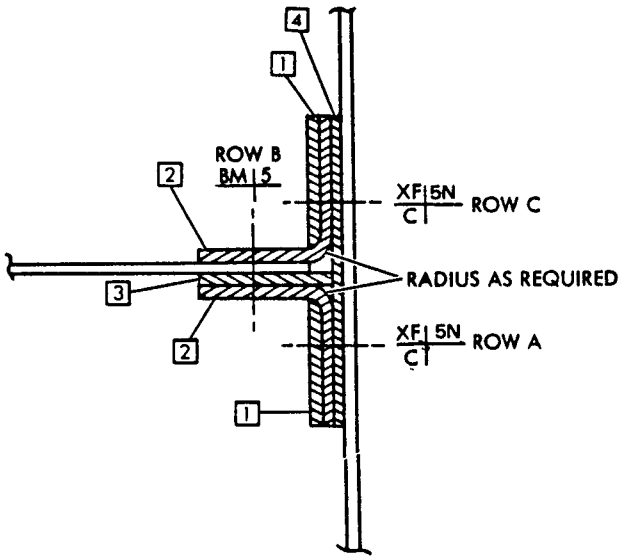


SECTION THROUGH DAMAGE

REPAIR SHOWN AT RUDDER STA 141.52 OTHER RIB REPAIRS SIMILAR WITH EXCEPTION OF THOSE AT RUDDER STA 49.27, 113.58 AND 167.56 WHICH ARE CHORDS ONLY



Rudder Rib Chord Repair
Figure 1 (Sheet 3 of 3)

REPAIR INSTRUCTIONS

1. Drill out fairing or leading edge skin fasteners and remove skin as required to gain access to damaged spar chord.

2. Rework or remove damage by any one of the following methods and then complete all repair steps as outlined.

   a. If only the flange is damaged then cut out the damaged portion of the chord flange or flanges as required.

   (b) If only crack damage is evident then stop drill with .25 diameter holes at end of all cracks that do not end in a fastener hole.

   (c) If above methods cannot be used then cut out damaged chord and replace with a filler section as illustrated.

3. If the spar web is damaged install a bonded and riveted repair similar to 55-10-4, figure 2 and according to 51-40-5.

4. Remove web stiffeners and fasteners as required to install repair parts on chord or web.

5. Fabricate and form repair parts.

6. Locate and drill fastener holes in repair parts to match original fastener holes in the spar chord.

7. Remove all burrs, nicks, scratches, sharp edges and corners on all repair parts and trimmed original parts.

8. Break all sharp edges and corners .015 to .03R.

9. Apply metal protective treatment to repair parts and cut or trimmed original parts per 51-10-2.

10. Install repair parts and web stiffeners and all fasteners.

11. Restore original interior finish per Maintenance Manual 51-21-0.

12. Replace all removed skins. Use equivalent fasteners of the same size and type as in original installation.

13. Refinish exterior surface per Maintenance Manual 51-21-0.

14. Rebalance the rudder after rework, repair or painting according to 51-80.

## NOTES

- THIS REPAIR WILL NOT HAVE AN EFFECT ON A STRUCTURALLY SIGNIFICANT ITEM (SSI) GIVEN IN SRM 51-00-4, FIG. 3. THUS, NO CHANGE TO THE SUPPLEMENTAL STRUCTURAL INSPECTION DOCUMENT (SSID) INSPECTION PROGRAM IS NECESSARY.
- REFER TO SRM 51-10-2 FOR METAL PROTECTIVE TREATMENT.
- REFER TO SRM 51-80.
- REFER TO SRM 51-30 FOR FASTENER CODE, REMOVAL AND INSTALLATION, HOLE SIZES AND EDGE MARGINS.

[A] THIS FRONT SPAR CHORD REPAIR IS APPLICABLE BETWEEN THE RUDDER STATIONS THAT FOLLOW:

63 - 84
89 - 112
124 - 139
144 - 167
177 - 194
199 - 230
238 - 246

[B] USE THE THICKNESS AS SHOWN AND PUT SHIMS UNDER PARTS [1] AND [2] ON THE TWO SIDES OF PART [4] 0.001 TO 0.005 INCH.

[C] USE THE THICKNESS AS SHOWN AND ADD A 0.007 INCH THICK SHIM.

## FASTENER SYMBOLS

+ INITIAL FASTENER LOCATIONS

| REPAIR MATERIAL | | | |
|---|---|---|---|
| LOCATION → | | FRONT SPAR [A] | |
| PART | | QTY | MATERIAL |
| [1] | ANGLE | 1 | 0.05 INCH THICK CLAD 2024-0 HT-T4 |
| [2] | ANGLE | 1 | 0.05 INCH THICK CLAD 2024-0 HT-T4 |
| [3] | FILLER | 1 | 0.063 INCH THICK CLAD 2024-T4 [C] |
| [4] | FILLER | 1 | 0.063 INCH THICK CLAD 2024-T4 [B] |
| [5] | SHIM | 2 | CLAD 2024-T3 [B] |
| ROW A | RIVET | 3 | BACB30FM-6 |
| ROW B | RIVET | 3 | BACB30FN-6 |

Rudder Front Spar Repair
Figure 1 (Sheet 2)


BOEING PROPRIETARY - Copyright © - Unpublished Work - See title page for details.

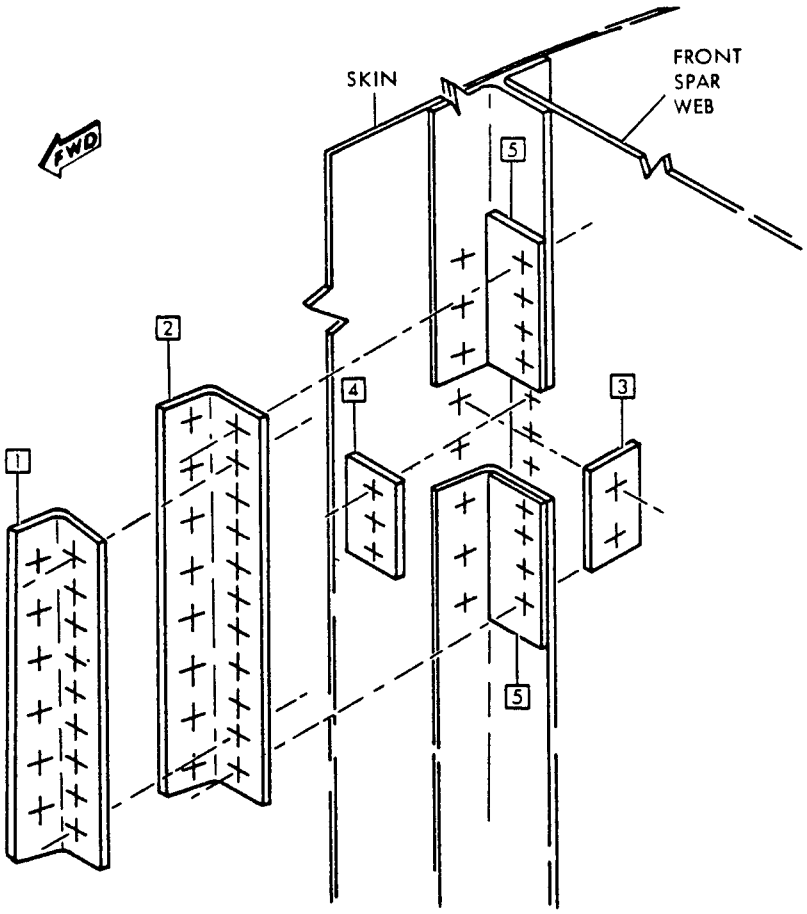


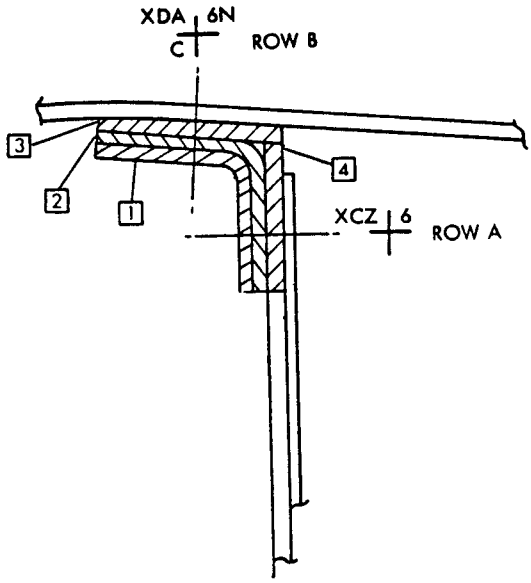


SECTION THROUGH REPAIR



Rudder Front Spar Repair
Figure 1 (Sheet 3 of 3)

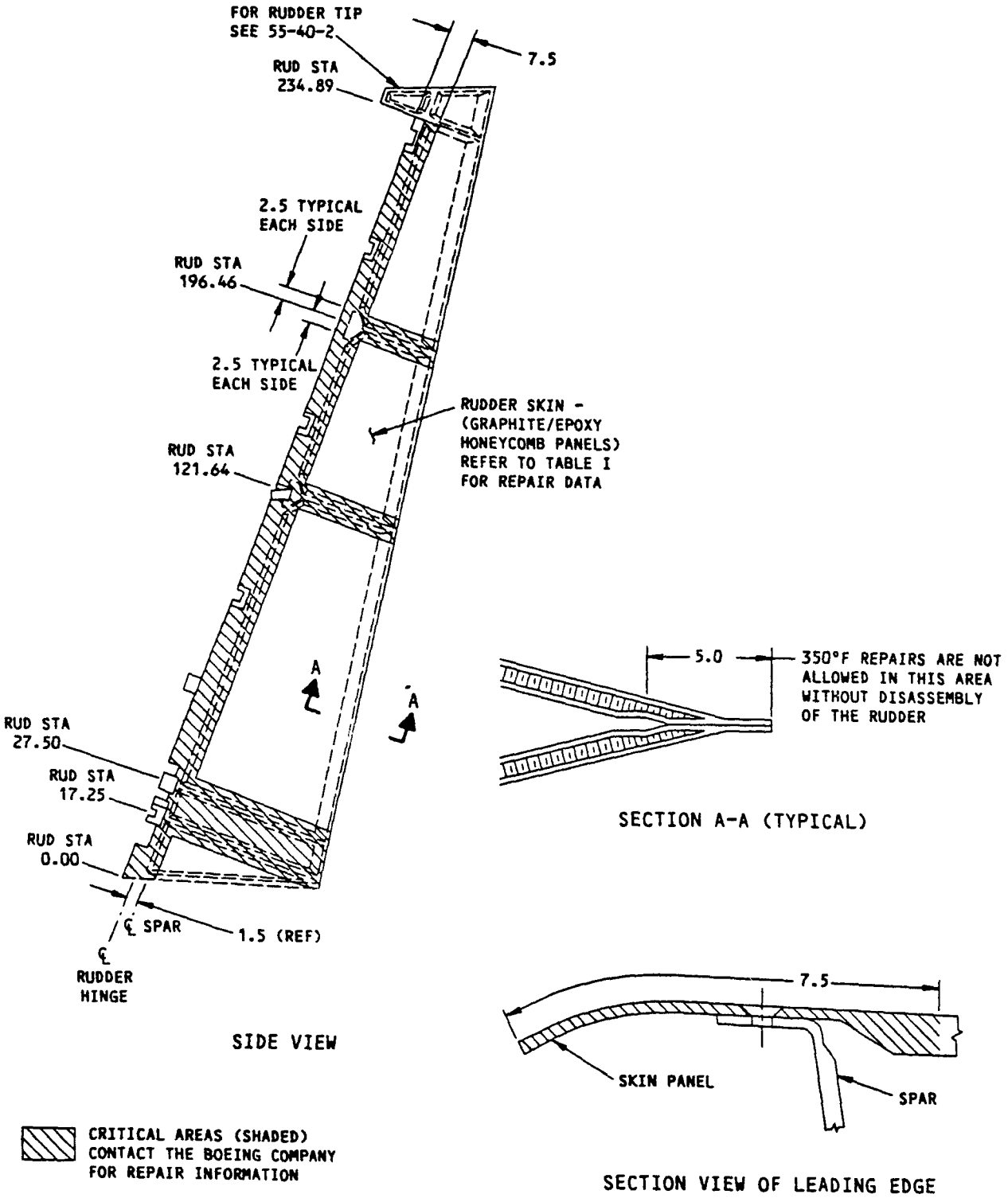


Rudder Skin Repairs (Graphite Composite Rudder)
Figure 1 (Sheet 1)

137073

| DAMAGE | INTERIM REPAIRS [B] | PERMANENT REPAIRS | | |
|---|---|---|---|---|
| | WET LAYUP 150°F CURE (SRM 51-40-12) | WET LAYUP 250°F CURE (SRM 51-40-15) | 250°F CURE (SRM 51-40-13) | 350°F CURE (SRM 51-40-14) |
| HOLES | 2.0 INCH MAX DIA NOT TO EXCEED 30% OF SMALLEST DIMENSION ACROSS THE HONEYCOMB PANEL AT THE DAMAGE LOCATION. REPAIR AS GIVEN IN SRM 51-40-12, REPAIR 14. [A] | 5.0 INCH MAX DIA NOT TO EXCEED 50% OF SMALLEST DIMENSION ACROSS THE HONEYCOMB PANEL AT THE DAMAGE LOCATION. USE TWO EXTRA PLIES PER FACESHEET REPAIRED [C] | 5.0 INCH MAX DIA NOT TO EXCEED 50% OF SMALLEST DIMENSION ACROSS THE HONEYCOMB PANEL AT THE DAMAGE LOCATION. USE TWO EXTRA PLIES PER FACESHEET REPAIRED [C] | NO SIZE LIMIT |
| CRACKS | UP TO 5.0 INCHES LONG, REPAIR AS GIVEN IN SRM 51-40-12, REPAIR 14. [A] | USE SAME LIMITS AND REQUIREMENTS AS FOR HOLES. | | |
| DELAMI-NATION | USE SAME LIMITS AS FOR HOLES AND REPAIR AS GIVEN IN SRM 51-40-12, REPAIR 14. [A] | USE SAME LIMITS AND REQUIREMENTS AS FOR HOLES. | | |
| NICKS AND GOUGES | IF FIBER DAMAGE OR DELAMINATION EXISTS, USE SAME LIMITS AS FOR HOLES AND REPAIR AS GIVEN IN SRM 51-40-12, REPAIR 14. [A] | IF THERE IS NO FIBER DAMAGE OR DELAMINATION, FILL NICKS OR GOUGES AS GIVEN IN SRM 51-40-12.<br>IF FIBER DAMAGE OF DELAMINATION EXISTS, USE SAME LIMITS AND REQUIREMENTS AS FOR HOLES. | | |
| DENTS | USE SAME LIMITS AS FOR HOLES AND REPAIR AS GIVEN IN SRM 51-40-12, REPAIR 14. [A] | USE SAME LIMITS AND REQUIREMENTS AS FOR HOLES. | | |

REPAIR DATA FOR 350°F CURE HONEYCOMB PANELS
TABLE I

NOTES

- THESE REPAIRS WILL NOT HAVE AN EFFECT ON A STRUCTURALLY SIGNIFICANT ITEM (SSI) GIVEN IN SRM 51-00-4, FIG. 3. THUS, NO CHANGE TO THE SUPPLEMENTAL STRUCTURAL INSPECTION DOCUMENT (SSID) INSPECTION PROGRAM IS NECESSARY.
- REFER TO SRM 51-10 FOR INVESTIGATION AND CLEANUP OF DAMAGE.
- APPLY THE FINISH TO THE REWORKED AREAS AS GIVEN IN AMM 51-20.
- REFER TO SRM 51-70 FOR AERODYNAMIC SMOOTHNESS REQUIREMENTS. WHERE THE DAMAGE EXCEEDS THE LIMITS SHOWN IN SRM 51-70, CONSIDERATION SHOULD BE GIVEN TO THE LOSS OF PERFORMANCE INVOLVED.
- WHERE NO REPAIR IS SPECIFIED, USE THE REPAIR INDEX IN THE APPROPRIATE REPAIR SECTION OF SRM 51-40 TO FIND THE REPAIR TO BE USED.

[A] LIMITED TO REPAIR OF DAMAGE TO ONE FACE-SHEET SKIN AND HONEYCOMB CORE. ONE REPAIR FOR EACH SQUARE FOOT OF AREA AND MINIMUM OF 6.0 INCHES (EDGE TO EDGE) FROM ANY OTHER DAMAGE (EITHER SIDE OF PANEL), FASTENER HOLE, OR EDGE OF PANEL.

[B] INSPECT INTERIM REPAIR USING NDI METHODS FOR EACH 51-40-12 EVERY AIRPLANE "2A" CHECK. PERMANENT REPAIR IS REQUIRED IF ANY DETERIORATION IS EVIDENT. THESE REPAIRS HAVE FAA APPROVAL CONTINGENT ON ACCOMPLISHMENT OF THE INSPECTIONS AT THE REQUIRED INTERVALS.

[C] ONE REPAIR FOR EACH SQUARE FOOT OF AREA AND A MINIMUM OF 6.0 INCHES (EDGE TO EDGE) FROM ANY OTHER DAMAGE (EITHER SIDE OF PANEL), FASTENER HOLE, OR EDGE OF PANEL.

Rudder Skin Repairs (Graphite Composite Rudder)
Figure 1 (Sheet 2)


BOEING PROPRIETARY - Copyright © - Unpublished Work - See title page for details.

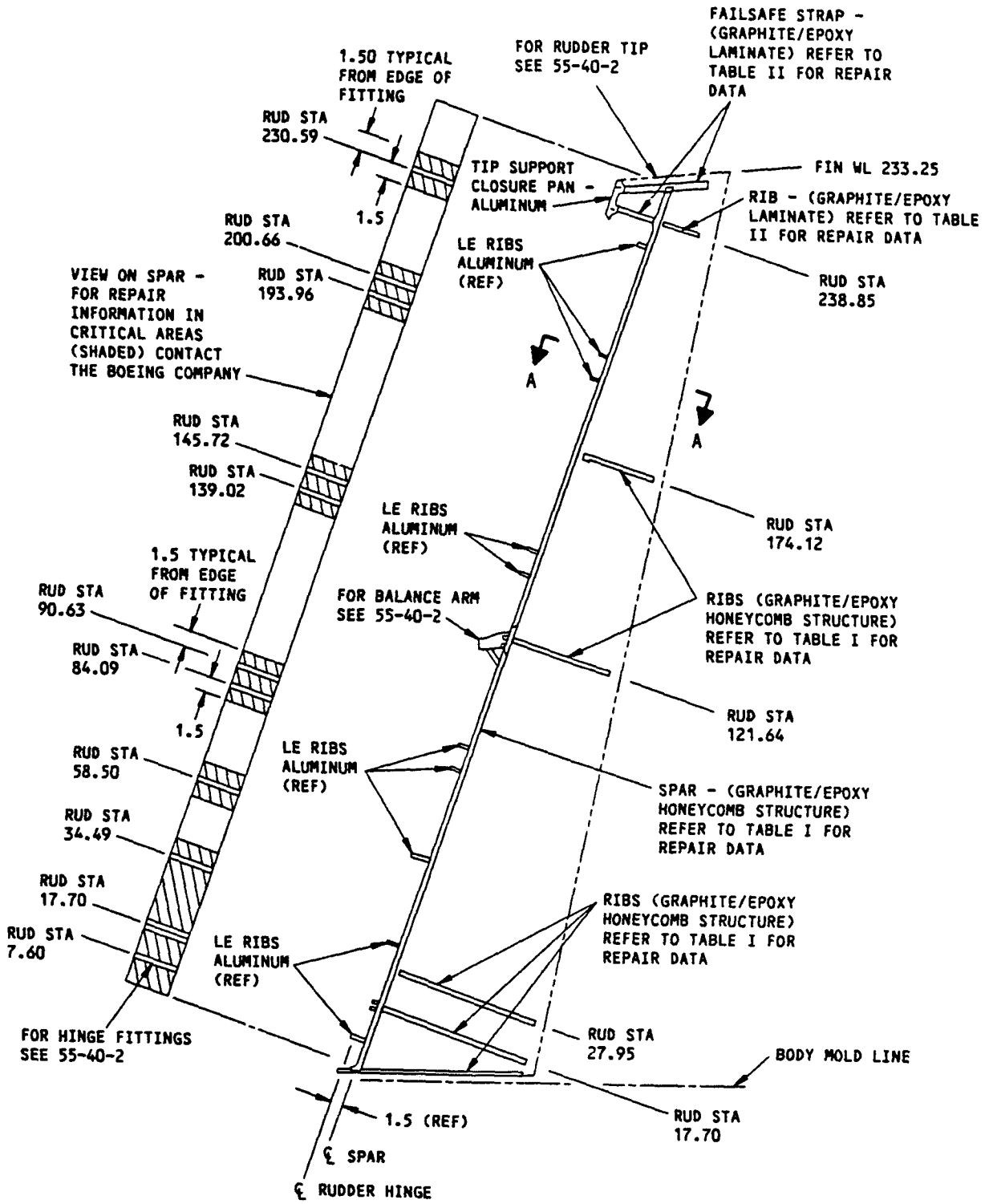


Rudder Structure Repairs (Graphite Composite Rudder)
Figure 1 (Sheet 1)

136894

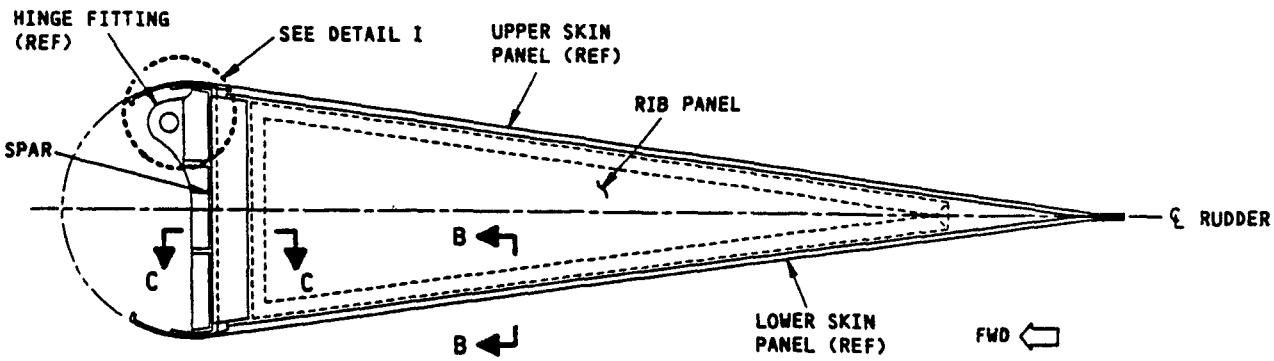


SECTION A-A

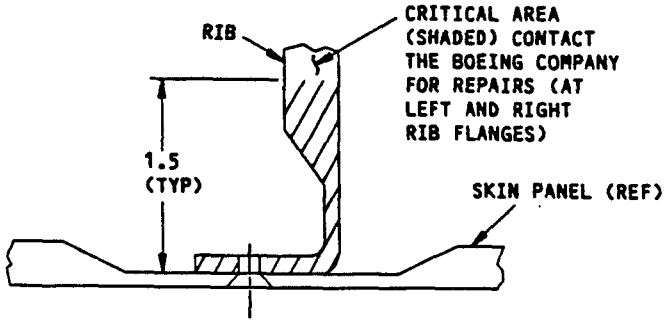


SECTION B-B

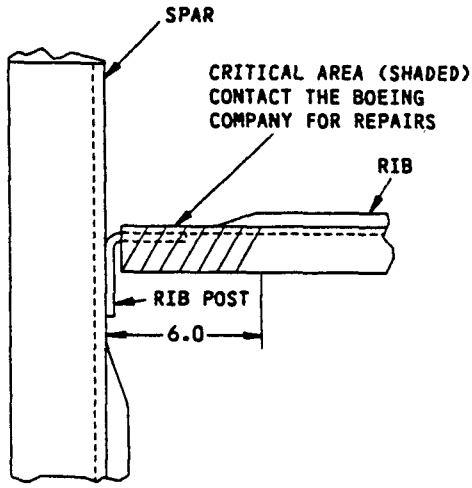


SECTION C-C

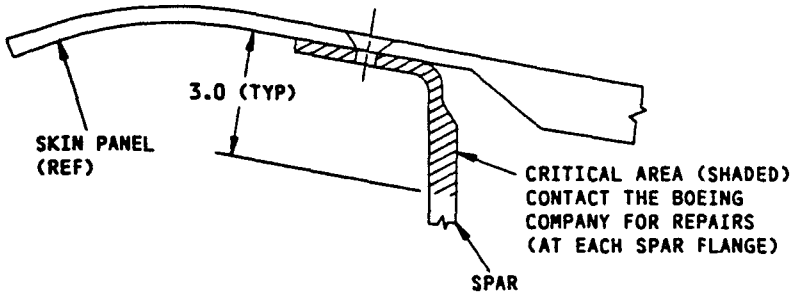


SECTION OF FRONT SPAR AT SKIN PANEL
DETAIL I

Rudder Structure Repairs (Graphite Composite Rudder)
Figure 1 (Sheet 2)

136890

| DAMAGE | INTERIM REPAIRS [B] | PERMANENT REPAIRS | | |
|---|---|---|---|---|
| | WET LAYUP 150°F CURE (SRM 51-40-12) | WET LAYUP 250°F CURE (SRM 51-40-15) | 250°F CURE (SRM 51-40-13) | 350°F CURE (SRM 51-40-14) |
| HOLES | 2.0 MAX DIA NOT TO EXCEED 30% OF SMALLEST DIMENSION ACROSS HONEYCOMB PANEL AT THE DAMAGE LOCATION. REPAIR AS GIVEN IN SRM 51-40-12, REPAIR 14. [A] | 5.0 MAX DIA NOT TO EXCEED 50% OF SMALLEST DIMENSION ACROSS HONEYCOMB PANEL AT THE DAMAGE LOCATION. USE TWO EXTRA PLIES FOR EACH FACESHEET REPAIRED [C] | 5.0 MAX DIA NOT TO EXCEED 50% OF SMALLEST DIMENSION ACROSS HONEYCOMB PANEL AT THE DAMAGE LOCATION. USE TWO EXTRA PLIES FOR EACH FACESHEET REPAIRED [C] | NO SIZE LIMIT |
| CRACKS | UP TO 5.0 INCHES LONG, REPAIR AS GIVEN IN SRM 51-40-12, REPAIR 14. [A] | USE SAME LIMITS AND REQUIREMENTS AS FOR HOLES. | | |
| DELAMI-NATION | USE SAME LIMITS AS FOR HOLES AND REPAIR AS GIVEN IN SRM 51-40-12, REPAIR 14. [A] | USE SAME LIMITS AND REQUIREMENTS AS FOR HOLES. | | |
| NICKS AND GOUGES | IF FIBER DAMAGE OR DELAMINATION EXISTS, USE SAME LIMITS AS FOR HOLES AND REPAIR AS GIVEN IN SRM 51-40-12, REPAIR 14. [A] | IF THERE IS NO FIBER DAMAGE OR DELAMINATION, FILL NICKS OR GOUGES AS GIVEN IN SRM 51-40-12.<br>IF FIBER DAMAGE OR DELAMINATION EXISTS, USE SAME LIMITS AND REQUIREMENTS AS FOR HOLES. | | |
| DENTS | USE SAME LIMITS AS FOR HOLES AND REPAIR AS GIVEN IN SRM 51-40-12, REPAIR 14. [A] | USE SAME LIMITS AND REQUIREMENTS AS FOR HOLES. | | |

REPAIR DATA FOR 350°F CURE HONEYCOMB PANELS
TABLE I

NOTES

- THESE REPAIRS WILL NOT HAVE AN EFFECT ON A STRUCTURALLY SIGNIFICANT ITEM (SSI) GIVEN IN SRM 51-00-4, FIG. 3. THUS, NO CHANGE TO THE SUPPLEMENTAL STRUCTURAL INSPECTION DOCUMENT (SSID) INSPECTION PROGRAM IS NECESSARY.
- REFER TO SRM 51-10 FOR INVESTIGATION AND CLEANUP OF DAMAGE.
- APPLY THE FINISH TO THE REWORKED AREAS AS GIVEN IN AMM 51-20.
- REFER TO SRM 51-70 FOR AERODYNAMIC SMOOTHNESS REQUIREMENTS. WHERE THE DAMAGE EXCEEDS THE LIMITS SHOWN IN SRM 51-70, CONSIDERATION SHOULD BE GIVEN TO THE LOSS OF PERFORMANCE INVOLVED.
- WHERE NO REPAIR IS SPECIFIED, USE THE REPAIR INDEX IN THE APPROPRIATE REPAIR SECTION OF SRM 51-40 TO FIND THE REPAIR TO BE USED.

[A] LIMITED TO REPAIR OF DAMAGE TO ONE FACESHEET SKIN AND HONEYCOMB CORE. ONE REPAIR FOR EACH SQUARE FOOT OF AREA AND MINIMUM OF 6.0 INCHES (EDGE TO EDGE) FROM ANY OTHER DAMAGE (ON EITHER SIDE OF PANEL), FASTENER HOLE, OR EDGE OF PANEL.

[B] INSPECT INTERIM REPAIR USING NDI METHODS AS GIVEN IN SRM 51-40-12 EVERY AIRPLANE "2A" CHECK. PERMANENT REPAIR IS REQUIRED IF ANY DETERIORATION IS EVIDENT. THESE REPAIRS HAVE FAA APPROVAL CONTINGENT ON THE ACCOMPLISHMENT OF THE INSPECTIONS AT THE REQUIRED INTERVALS.

[C] ONE REPAIR PER SQUARE FOOT OF AREA AND A MINIMUM OF 6.0 INCHES (EDGE TO EDGE) FROM ANY OTHER DAMAGE (ON EITHER SIDE OF PANEL), FASTENER HOLE, OR EDGE OF PANEL.

[D] ONE REPAIR PER SQUARE FOOT OF AREA AND A MINIMUM OF 3.0 INCHES (EDGE TO EDGE) FROM OTHER DAMAGE (ON EITHER SIDE OF PART), FASTENER HOLE, OR EDGE OF PART.

Rudder Structure Repairs (Graphite Composite Rudder)
Figure 1 (Sheet 3)


BOEING PROPRIETARY - Copyright © - Unpublished Work - See title page for details.

| DAMAGE | INTERIM REPAIRS [B] | PERMANENT REPAIRS | | |
|---|---|---|---|---|
| | WET LAYUP 150°F CURE (51-40-12) | WET LAYUP 250°F CURE (51-40-15) | 250°F CURE (51-40-13) | 350°F CURE (51-40-14) |
| HOLES | 2.0 MAX DIA NOT TO EXCEED 30% OF SMALLEST DIMENSION ACROSS LAMINATE PANEL AT THE DAMAGE LOCATION. REPAIR PER 51-40-12, REPAIR 14. [D] | 5.0 MAX DIA NOT TO EXCEED 50% OF SMALLEST DIMENSION ACROSS LAMINATE PANEL AT THE DAMAGE LOCATION. USE TWO EXTRA PLIES PER SIDE [D] | 5.0 MAX DIA NOT TO EXCEED 50% OF SMALLEST DIMENSION ACROSS LAMINATE PANEL AT THE DAMAGE LOCATION. USE TWO EXTRA PLIES PER SIDE | NO SIZE LIMIT |
| CRACKS | UP TO 5.0 INCHES LONG, REPAIR PER 51-40-12, REPAIR 14. [D] | USE SAME LIMITS AND REQUIREMENTS AS FOR HOLES. | | |
| DELAMI-NATION | USE SAME LIMITS AS FOR HOLES AND REPAIR PER 51-40-12, REPAIR 14. [D] | USE SAME LIMITS AND REQUIREMENTS AS FOR HOLES. | | |
| NICKS AND GOUGES | IF FIBER DAMAGE OR DELAMINATION EXISTS, USE SAME LIMITS AS FOR HOLES AND REPAIR PER 51-40-12, REPAIR 14. [D] | IF THERE IS NO FIBER DAMAGE OR DELAMINATION, FILL NICKS OR GOUGES PER 51-40-3.<br>IF FIBER DAMAGE OF DELAMINATION EXISTS, USE SAME LIMITS AND REQUIREMENTS AS FOR HOLES. | | |
| DENTS | USE SAME LIMITS AS FOR HOLES AND REPAIR PER 51-40-12, REPAIR 14. [D] | UP TO 2.0 IN. DIA WITH NO FIBER DAMAGE OR DELAMINATION, REPAIR PER 51-40-3, REPAIR 12.. [D]<br>IF OVER 2.0 IN. DIA OR WITH FIBER DAMAGE OR DELAMINATION, USE SAME LIMITS AND REQUIREMENTS AS FOR HOLES. | | |

REPAIR DATA FOR 350°F CURE LAMINATES
TABLE II

Rudder Structure Repairs (Graphite Composite Rudder)
Figure 1 (Sheet 4)

136905

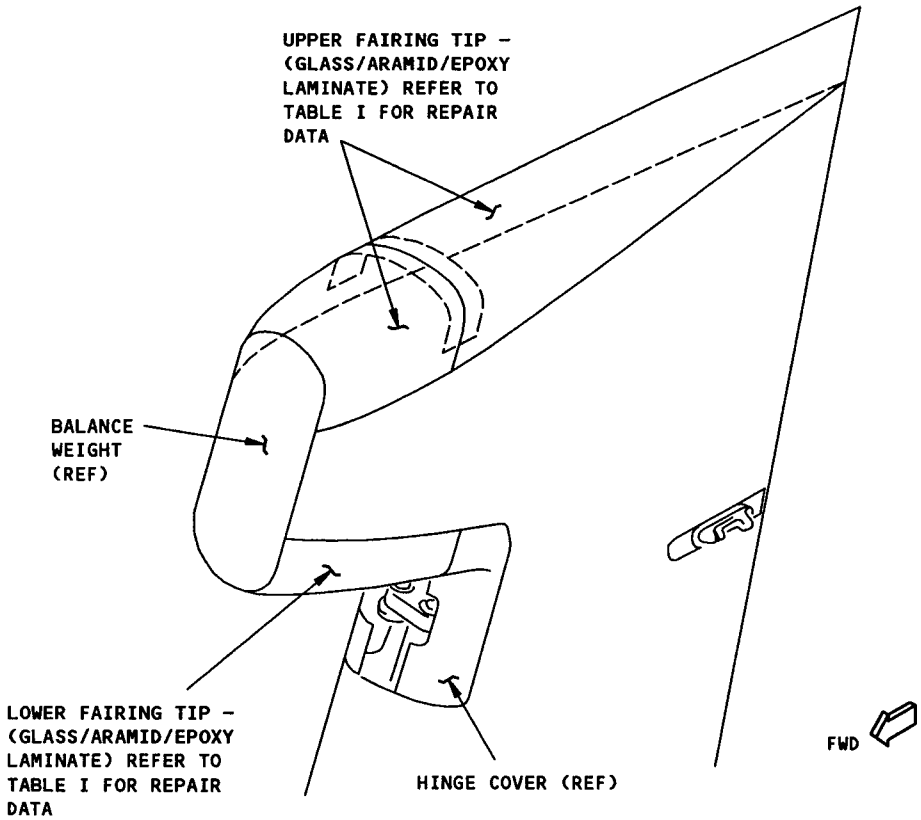


## NOTES

- THESE REPAIRS WILL NOT HAVE AN EFFECT ON A STRUCTURALLY SIGNIFICANT ITEM (SSI) GIVEN IN SRM 51-00-4, FIG. 3. THUS, NO CHANGE TO THE SUPPLEMENTAL STRUCTURAL INSPECTION DOCUMENT (SSID) INSPECTION PROGRAM IS NECESSARY.
- REFER TO SRM 51-10 FOR INVESTIGATION AND CLEANUP OF DAMAGE.
- APPLY THE FINISH TO THE REWORKED AREAS AS GIVEN IN AMM 51-20.
- REFER TO SRM 51-70 FOR AERODYNAMIC SMOOTHNESS REQUIREMENTS. WHERE THE DAMAGE EXCEEDS THE LIMITS SHOWN IN SRM 51-70, CONSIDERATION SHOULD BE GIVEN TO THE LOSS OF PERFORMANCE INVOLVED.
- WHERE NO REPAIR IS SPECIFIED, USE THE REPAIR INDEX IN THE APPROPRIATE REPAIR SECTION OF SRM 51-40 TO FIND THE REPAIR TO BE USED.

[A] ONE REPAIR FOR EACH SQUARE FOOT OF AREA AND A MINIMUM OF 3.0 INCHES (EDGE TO EDGE) FROM ANY OTHER DAMAGE (ON EITHER SIDE OF PART), FASTENER HOLE, OR EDGE OF PART.

[B] INSPECT INTERIM REPAIR USING NDI METHODS AS GIVEN IN SRM 51-40-12 EVERY AIRPLANE "2A" CHECK. PERMANENT REPAIR IS REQUIRED IF ANY DETERIORATION IS EVIDENT. THESE REPAIRS HAVE FAA APPROVAL CONTINGENT ON ACCOMPLISHMENT OF THE INSPECTIONS AT THE REQUIRED INTERVALS.

Rudder Tip Repairs (Graphite Composite Rudder)
Figure 2 (Sheet 1)


BOEING PROPRIETARY - Copyright © - Unpublished Work - See title page for details.

| DAMAGE | INTERIM REPAIRS [B] | PERMANENT REPAIRS | | |
|---|---|---|---|---|
| | WET LAYUP ROOM TEMP (51-40-12) | WET LAYUP 150°F CURE (51-40-12) | WET LAYUP 200°F CURE (51-40-15) | 250°F CURE (51-40-13) |
| HOLES | 2.0 MAX DIA NOT TO EXCEED 30% OF SMALLEST DIMENSION ACROSS LAMINATE PANEL AT THE DAMAGE LOCATION. REPAIR PER 51-40-12, REPAIR 14. [A] | 4.0 MAX DIA NOT TO EXCEED 50% OF SMALLEST DIMENSION ACROSS LAMINATE PANEL AT THE DAMAGE LOCATION. USE TWO EXTRA PLIES PER SIDE [A] | 4.0 MAX DIA NOT TO EXCEED 50% OF SMALLEST DIMENSION ACROSS LAMINATE PANEL AT THE DAMAGE LOCATION. USE TWO EXTRA PLIES PER SIDE | NO SIZE LIMIT |
| CRACKS | UP TO 4.0 INCHES LONG, REPAIR PER 51-40-12, REPAIR 14. [A] | USE SAME LIMITS AND REQUIREMENTS AS FOR HOLES. | | |
| DELAMI-NATION | USE SAME LIMITS AS FOR HOLES AND REPAIR PER 51-40-12, REPAIR 14. [A] | USE SAME LIMITS AND REQUIREMENTS AS FOR HOLES. | | |
| NICKS AND GOUGES | IF FIBER DAMAGE OR DELAMINATION EXISTS, USE SAME LIMITS AS FOR HOLES AND REPAIR PER 51-40-12, REPAIR 14. [A] | IF THERE IS NO FIBER DAMAGE OR DELAMINATION, FILL NICKS OR GOUGES PER 51-40-12.<br>IF FIBER DAMAGE OR DELAMINATION EXISTS, USE SAME LIMITS AND REQUIREMENTS AS FOR HOLES. | | |
| DENTS | USE SAME LIMITS AS FOR HOLES AND REPAIR PER 51-40-12, REPAIR 14. [A] | UP TO 2.0 IN. DIA WITH NO FIBER DAMAGE OR DELAMINATION, REPAIR PER 51-40-12, REPAIR 12. [A]<br>IF OVER 2.0 IN. DIA OR WITH FIBER DAMAGE OR DELAMINATION, USE SAME LIMITS AND REQUIREMENTS AS FOR HOLES. | | |

REPAIR DATA FOR 250°F CURE LAMINATES
TABLE I

Rudder Tip Repairs (Graphite Composite Rudder)
Figure 2 (Sheet 2)

136908

# ATTACH FITTINGS

1. General

   A. Attach fittings are identified in sections 55-10, 55-20, 55-30 and 55-40.

   B. Attach fittings are normally replacement items.